冷凍門把手

Stainless steel latch

TM-1060



商品介紹 Product description

1.可用於不同厚度的門，挑選不同的座子高度。
2.內置彈簧結構，方便開啟和關閉。

●材質：不鏽鋼SUS304
●表面處理：拉絲拋光
●用途：冷凍庫、廚房設備、冰櫃

1. It can be used for doors of different thicknesses, and different seat heights can be selected.
2. Built-in spring structure,easy to open and close.

●Material: Stainless steel 304
●Finish: Brushed and polished
●Uses: Freezers,kitchen equipment,freezers.

〔TM-1060〕+〔TH-1060-A〕

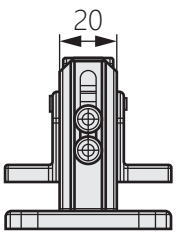

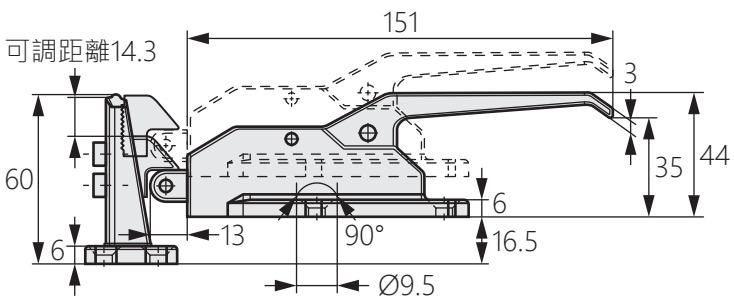



〔TH-1060-A〕

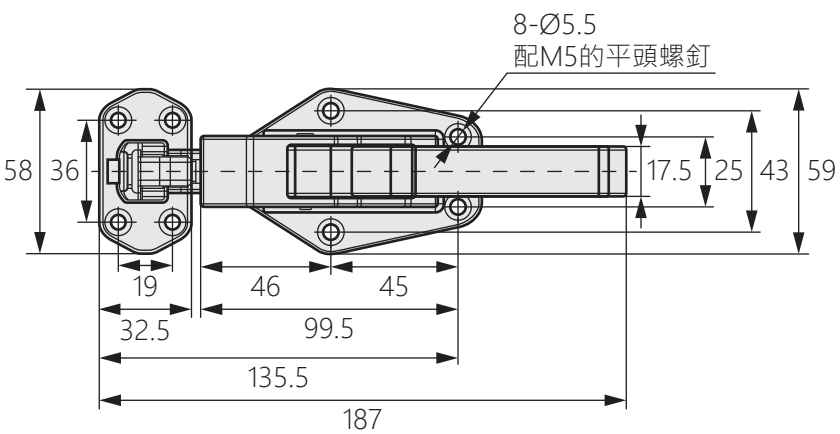

〔TM-1060〕+〔TH-1060-B〕

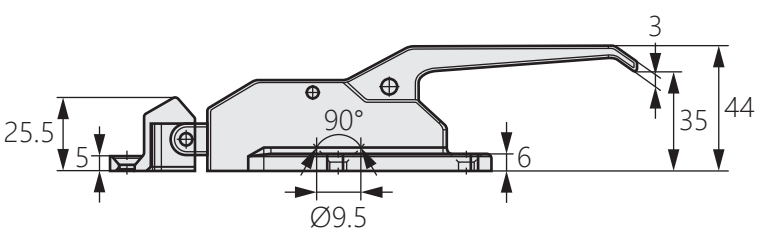



〔TH-1060-B〕

