配電箱鎖

Distribution box lock

TM-089

商品介紹 Product description

1.帶滑動式防塵蓋。
2.傳動體與鎖體可單獨分離。
3.調換傳動條左右位置可實現左右開門，傳動體作壓板使用。
4.適用門板厚度：1.5-3mm。
5.附鑰匙。

●材質：鋅合金鎖體、傳動軸；鍍鋅鋼鋼栓、壓板、傳動條
●表面處理：混合色
●用途：機箱機櫃、配電箱等。

1. With sliding dust cover.
2. The transmission body and the lock body can be separated separately.
3. The left and right positions of the transmission bar can be exchanged to open the door left and right,and the transmission body can press board use.
4. Applicable door thickness: 1.5-3mm.
5. With key.
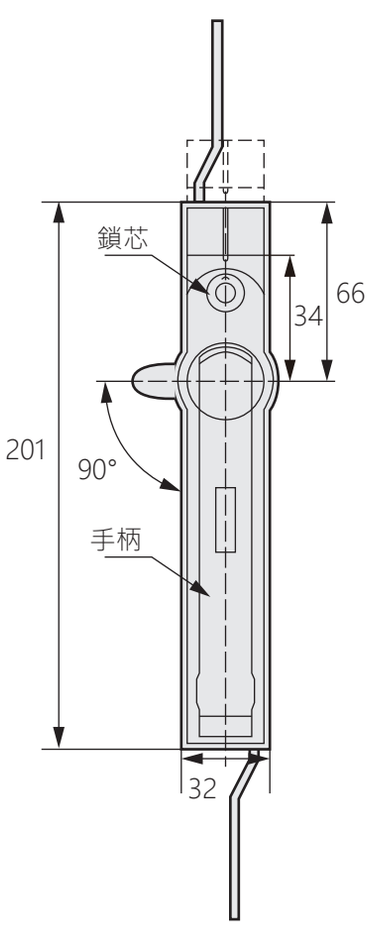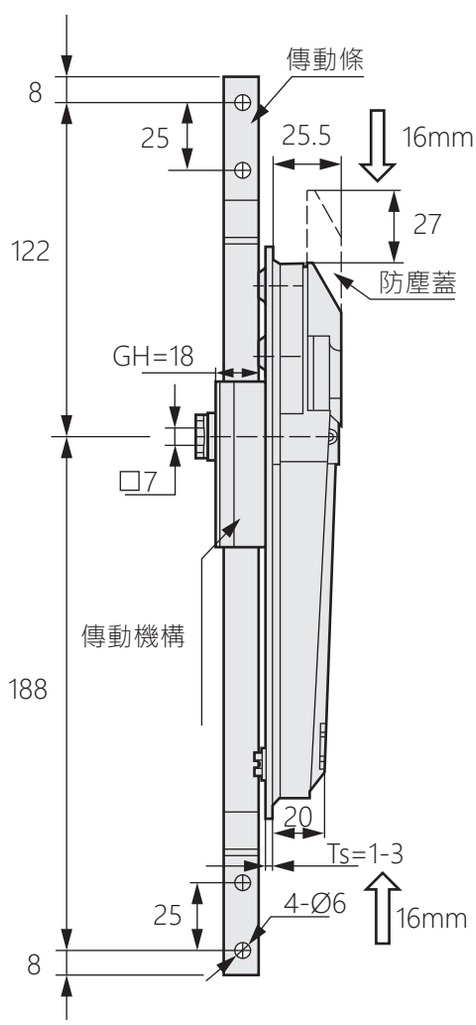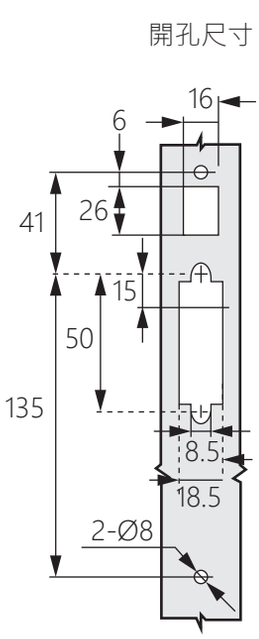
●Material: Zinc alloy lock body, transmission shaft; galvanized steel bolt, pressure plate, transmission.
●Finish: Mixed colours.
●Uses: Chassis cabinets, distribution boxes, etc.