ISO9001:2015 KAB-QC-34 벤처기업인증 기술혁신형중소기업 경영혁신형 중소기업

KOBA
BEST SHOCK ABSORBER

HYDRAULIC
SHOCK ABSORBER
BUFFER

Softly
Safetly
Smoothly

KOBA Co.,Ltd

KOBA
BEST SHOCK ABSORBER

Flexibility
Versatility
Innovative Solutions

OVERVIEW

Established in 1993, KOBA has developed ability by continuous R & D and quality enhancement under the value of Change and Innovation by 'KOBA' brand.
We supply various solutions regarding Shock and Vibration on the basis of accumulated & state-of-art technology and abundant experiences for a long time.
And also by continuous R & D and Quality Assurance System, we design, manufacture, and assure quality of Shock Absorber, Hydraulic Buffer, Visco Elastic Buffer, Hydro Check, Rate Control, Gas Spring, Special Damper, etc., then supply all of the world as well as domestic market.

In addition to standard products, we are giving various solutions for order made products also and react against fast delivery requirement with best quality. And by endless research and development we commercialize our Intellectual Property Rights.

As a leader of Shock Absorber, we promise to give trust, satisfaction and optimal customized service that customer needs on the basis of differentiated technology, accumulated knowhow, and effective management system. And as we are in rapidly changing global era, we will be the company that grow and evolve with customer with the target of "Quality First"

CONTENTS

01. Overview
- Shock Absorber's Structure and Principal ····· 07
- Shock Absorber's Model Selection ····· 09
- Shock Absorber's Model Selection Calculation Formula ····· 11

02. Shock Absorber products
- KMA Series ····· 16
- KMS Series ····· 25
- KSA Series ····· 34
- KHA Series ····· 42
- Oil Tank & Check Valve Series ····· 50

03.Hydraulic Buffer
- KHG Series ····· 54
- KHS Series ····· 66
- KCSC Series(Stacker Crane Buffer) ····· 72

04. Visco-Elastic Buffer
- KES Series ····· 81
- KVD Series(Elasto-Fluid Heavy Duty Buffer) ····· 90

05. Rate Controls
- KRC Series ····· 92
- KHC Series(Hydro Check) ····· 96

06. Gas Spring
- KG Series(Compression) ····· 100
- KGP Series(Extension) ····· 103
- KGL Series(Free Lock) ····· 105

07. Engineering Data ····· 106

08. Shock Absorber's Instruction Manual & Safety Notice ····· 119

Shock Absorbers & Buffers

KMA Series

KMA Series is a mini and adjustable product, and is adjustable to control damping force according to impact velocity by 12 steps from 0° to 300°. By using bumper head it solves fundamentally piston shooting problem (so called bottom-out problem) at piston end, so stop collar is not needed. The Energy absorbing capacity is increased by increasing of cylinder's sectional area and the range of effective weight is widened.

KMS Series

KMS Series is a self compensating type and because of variable orifice impact object can be gradually and smoothly stopped. By using bumper head it solves fundamentally piston shooting problem(so called bottom-out problem) at piston end, so stop collar is not needed. The energy absorbing capacity is increased by increasing of cylinder's sectional area and the range of effective weight is widened.

KSA Series

KSA Series is medium and large size and the specific adjustment is possible by 12 steps' adjustment dial at front and end. And at front side, the function of adjustment stop collar is included.

KHA Series

KHA Series a medium and large size and the specific adjustment of 8 steps is possible according to impact velocity by adjusting adjustment dial at the center of body from 0 to 180°.

KHG Series

For heavy duty application, KHG Series is a self compensating type and absorbs big impact energy by interaction of inner oil and nitrogen gas. And piston rod is returned by the compressed nitrogen gas.

KHS Series

For heavy duty application, KHS Series is a self compensating and large capacity type and collision is smoothly stopped by high damping force because of optimized orifice structure design according to user's required using condition.

KCSC Series

KCSC Series has similar structure of KHG Series and is gas return type. Peak value is low because gas volume ratio is bigger than oil volume ratio.

KES Series

KES Series is developed by using damping force and spring force of Visco-Elastic Fluids, and structure is simple and robust but has big damping constant comparing to its small appearance.

KRC Series

KRC Series is a product which speed control of transfer equipment is possible by tension and compression to both and one direction. It controls softly and safely the machine operation.

KHC Series (Hydro Check)

Hydro Check Series enables precise speed and location control for the moving equipments with various strokes

KG, KGP Series (Gas Spring)

KG and KGP Series are used in various range of industries because those have several merits such as speed control function on small spring constant and extension & compression of long stroke, and those make stable force comparing to general Plate spring or coil spring.
Various gas springs according to stroke, speed force, mount type, etc are customized under consideration of usage and installation environments.

KGL Series (Free Lock Gas Spring)

KGL Series has all merits of general gas spring it also has free lock function to operators and they can decide a stroke at wanted location where operators want to install.

Hydraulic Shock Absorbers

Global business circumstances needs bigger production capacity with high speed. On the contrary, by industrial acceleration impact mass is become heavy and vibration makes tough working conditions, and fatigue energy accumulated on the production facilities. Without proper machines can be damaged easily.

KOBA supplies exceptionally enhanced various products by developing innovative Shock Absorbers by continuous R & D. And also KOBA developed products are optimized general industrial areas which are suffered by shock and vibration. Sophisticated KOBA Products' life cycle has been prolonged by enhanced durability, the range of effective mass is widened, and the energy absorption capacity is doubled when it comparing with previous model.

You can compare with other impact absorption products like Shock Absorber are Rubber, Spring, and Hydraulic / Pneumatic Devices.

Shock absorption features are as below.

Shock absorption comparison chart

Rubber & Spring	When decelerating moving object by rubber or spring, the compressed force is not constant and the resistance force is increased gradually, due to that characteristics, impact energy is not absorbed and rather stored, and it transfers impact energy with less absorption to the object.
Hydraulic & Pneumatic Devices	At deceleration moment, single orifice devices like hydraulic cylinder, dashpot, deceleration valve, etc produce big resistance force in initial stage. Rather if pneumatic device is used, gradually the resistance force is increased and maximum the force become biggest at the end of stroke.
KOBA Shock Absorbers	KOBA Shock Absorbers absorb impact energy at constant resistance through all the stroke sections by using multiple orifices to minimize the impact force when moving object is stopped. Thus, KOBA shock absorber can stop moving object softly by minimized impact force.

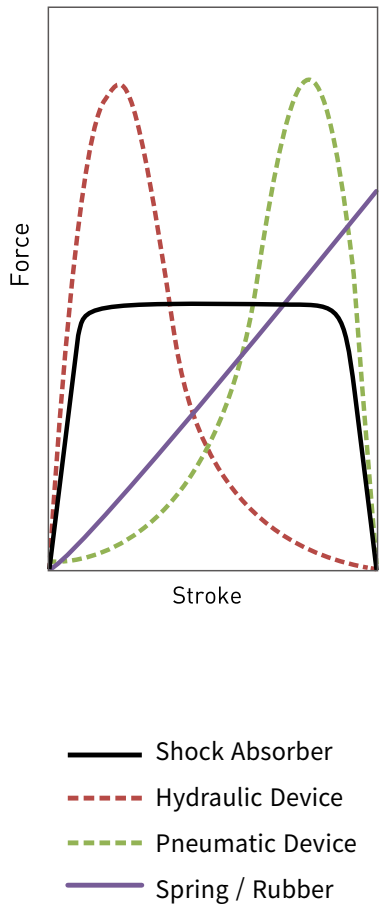

Shock Absorber's Overview Structure and Function

1. Shock Absorber consists of body, bumper head, piston rod, adjustment dial, and lock nut.
2. Thanks to full threaded body it is easy to be installed and precise location fixing is possible. And surface area is increased to dissipate thermal energy fast to atmosphere.
3. Bumper head has a role of stopper.
4. Piston rod transfers the Impact energy of bumper head to piston.
5. Adjustment dial is useful that damping force can be adjusted to impact weight and velocity according to damping conditions.
6. Lock nut is useful for installing and fixing shock absorber tightly with body tread installation.

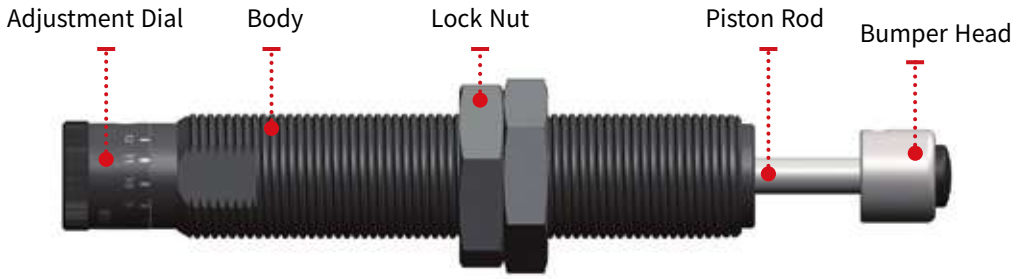

Shock Absorber's Inner view Structure and Working principle

Inside of shock absorber consists of piston, check valve, accumulator, Inner tube, multiple orifice, return spring, oil, etc.
On impacting, the piston rod is inserted into Inner tube and check valve is closed. And it forces oil in the chamber to flow through orifices. At the same time, damping force is generated into piston. Compressed oil which flowed into accumulator is compensating same volume of piston inside. Return process is made by return spring and check valve is opened then piston rod is returned to its original position.

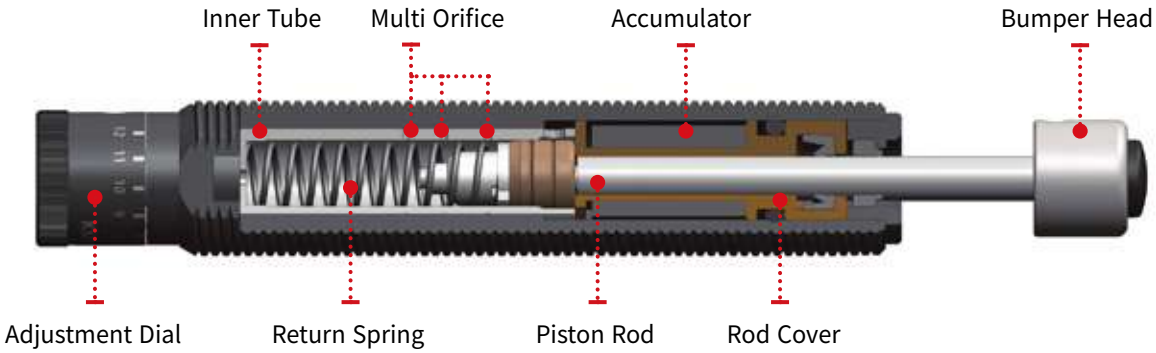

Principal of Energy Absorption

After impacting, compressed oil by piston is to be forced out of Inner tube through orifices. The impact energy is changed into thermal energy then dissipated to atmosphere through threaded body.

Orifice Feature

1. Adjustable

1) Single Orifice

Single Orifice Type has a dashpot structure with gap between piston and Inner tube or one hole. resistance characteristic is shown as below. Orifice area is same on entire stroke section, so resistance force is increased immediately after collision. And as stroke progress, the speed decreases and resistance force minimized at the end.

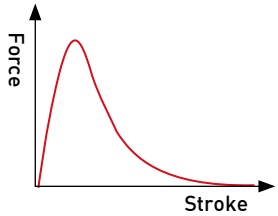

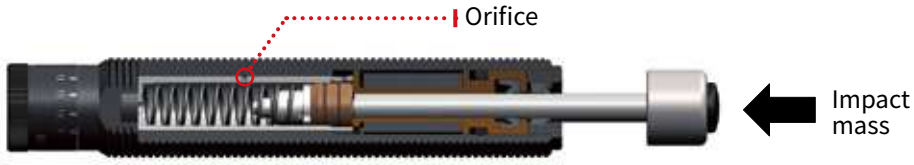

2) Multiple Orifices

By using multiple orifices, total oil route dimension is decreasing when the stroke is on-going. It enables to maintain total shock absorption safely and softly. Adjustment dial can provide best deceleration features against various collision cases.

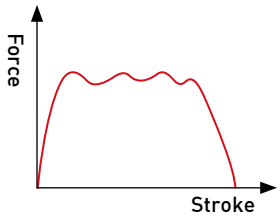

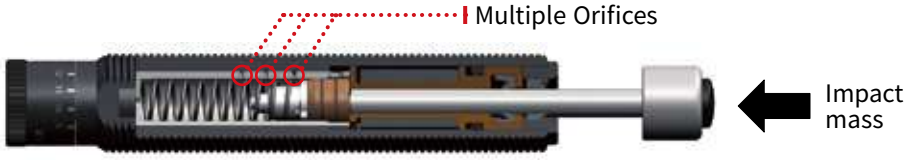

2. Self compensating

1) Multiple Orifices

Operation principal is same of adjustable type. When it set to the optimized orifices' area is applied, adjustment is not possible after that. Diagram a1 shows high velocity - light impact mass, b1 shows low velocity-heavy impact mass.

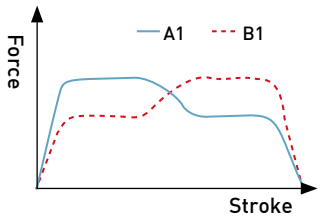

2) Metering Orifice

It is self compensating type. It has quick response and better efficiency for short stroke because the changing of orifice area is continuous. Products of below Stroke 25mm are classified as this type(Except KMS 14-20).

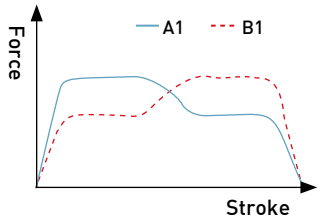

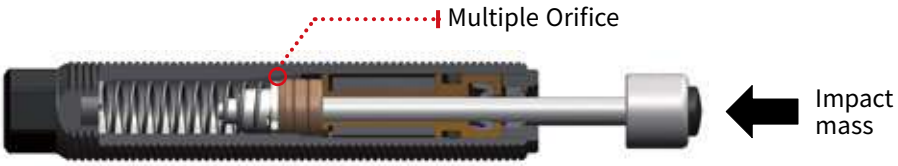

Shock Absorber Model Selection

1. 5 conditions for Model Selection

1) Load Weight 2) Impact Velocity 3) Propelling Force 4) Cycle/hour

5) Work Environment

2. Model Selection Steps

1) Check working conditions

⇨ Check movement direction : Vertical Motion, Horizontal Motion, Rotary Motion, with or without Propelling force

⇨ Check Maximum weight

⇨ Check moving load velocity V(m/s) : In case of cylinder power generated movement condition, consider the velocity as twice of original impact speed.

2) Calculate the Kinetic Energy

Calculate the Kinetic Energy [$E_K = (m \times V^2) / 2$]

3) Check Propelling Force

If propelling force exist, please refer the model selection of calculation formula propelling force (symbol explanation) selection formula. After calculating propelling force, select shock absorber's temporary model.

4) Temporary Stroke selection of Shock Absorber

According to shock absorber's temporary model, select temporary stroke.

5) Calculation of Propelling Force Energy

Find propelling energy with the reference of formulae described in catalog. [$E_W = F \times S$]

6) Find Total Energy and Select a model of Shock Absorber

Calculate total energy [$E_T = E_K + E_W$]

7) Check the absorption Energy

Find energy/hour from using cycle and energy/cycle, and check the value is in the range of usable specification in the engineering data of catalogue.

[$E_TC \geq E_T \times C$]

8) Check the Effective Mass

In case of propelling force, effective weight must be checked, especially if the velocity is below 0.3m/s (low velocity).

$m_e = (2 \times E_T) / V^2$ [Calculated me should be in the range of catalogue engineering data]

In case of no propelling force, m_e = m(Weight of Impact item)

Even if the moving load is in same weight and velocity, the effective mass could be different depending on the propelling force and initial location of shock absorber.

Ⓐ Without Propelling Force

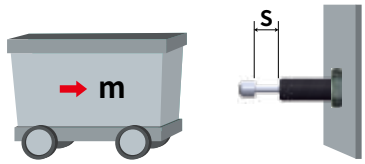

m=50kg V=2m/s
E_K=100Nm E_W=0
E_T=100Nm m_e=50kg

Ⓑ With Propelling Force

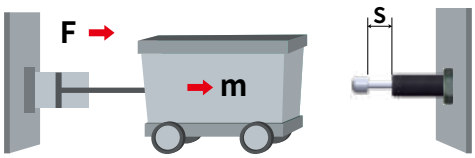

m=50kg V=2m/s Stroke=0.1m
E_K=100Nm Cylinder Bore=80mm
Pressure=5bar F=2512N E_W=251.2Nm
E_T=351.2Nm m_e=175.6kg

Ⓒ Without Propelling Force

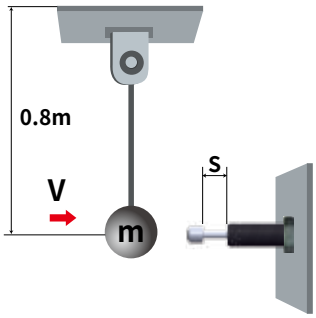

m=20kg V=2m/s E_K=40Nm
E_W=0Nm E_T=40Nm m_e=20kg

Ⓓ With Propelling Force

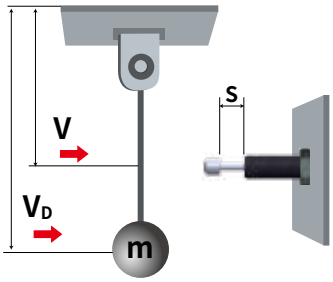

m=20kg V=2m/s Stroke=0.1m
V_D=1.25m/s E_K=40Nm E_W=31.36Nm
E_T=71.36Nm m_e=91.34kg

9) Check operation temperature

⇨ Standard operation temperature within range of : -10~80°C

⇨ For Specific or different temperature, please consult us.

10) Remark

Please check our website, www.kobapage.com for easy model selection or contact us for easy engineering solution.

Flow chart of Model selection

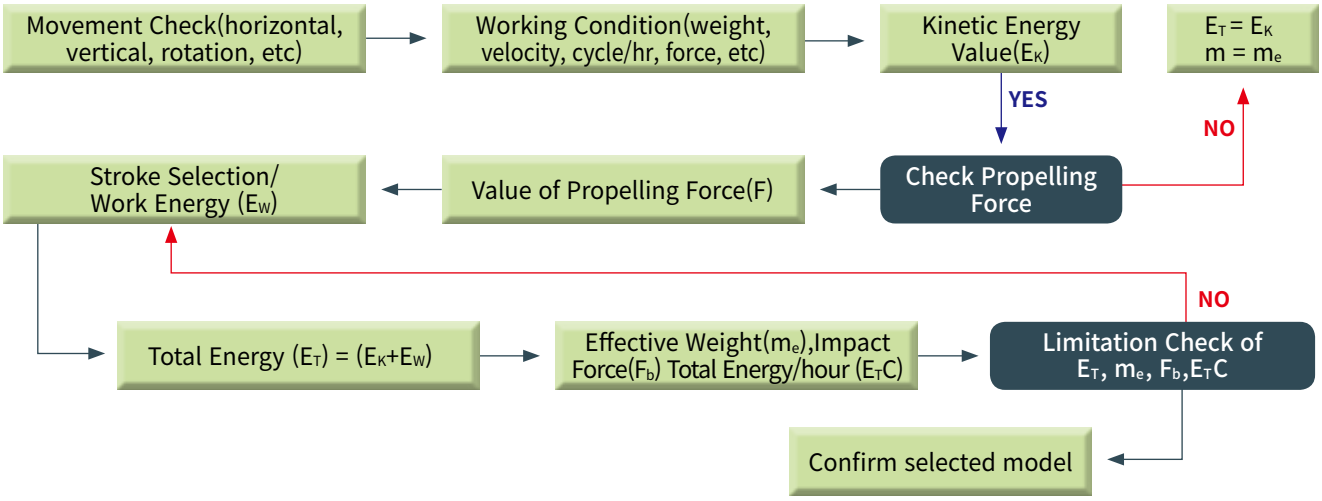

Model Selection Calculation Formula

Symbol Explanation

Symbol	Unit	Explanation
E_K	Nm	Kinetic Energy
E_W	Nm	Work Energy(Propelling Energy)
E_T	Nm	Total Energy
E_TC	Nm/h	Total Energy/hour
F_S	N	Shock Absorber Force
F	N	Propelling Force
m_e	kg	Effective Mass
S	mm	Stroke
C	Cycle/h	Impact Cycle/hour
V	m/s	Impact Speed
V_e	m/s	Actual Impact Speed
P	kW	Motor Power

Symbol	Unit	Explanation
d	mm	Cylinder Rod Diameter
D	mm	Cylinder Bore
g	m/s^2	Acceleration of Gravity
T	Nm	Propelling Torque
H	m	Fall Height
m	kg	Weight
p	bar	Working Pressure of Cylinder
ω	rad/s	Angular Velocity
α	° (degree)	Incline Angle
I	Nm/s^2	Inertia Moment
μ	μ	Friction Coefficient
a	m/s^2	Acceleration / Deceleration

1kgf = 9.81N , 1Nm = 1J , 1MPa = 10bar = 10.2kg/cm^2 , 1g = 9.8m/s^2

Hydraulic Shock Absorbers

Symbol Explanation

Description			Fomula
Kinetic Energy(E_K)	General Inertial Moving		$E_K = (m \times V^2) / 2$
	Vertical Free Falling		$E_K = m \times g \times H$
Work Energy (E_W)			$E_W = F \times S$
Total Energy (E_T)			$E_T = E_K + E_W$
Total Energy/hour (E_TC)			$E_TC = E_T \times C$
Max. Shock Absorber Force (F_S) (Required for checking the hardness of installation part)			$F_S = E_T / (S \times 0.8)$
Propelling Force (F)	Motor Power Propelling Force		$F = (3000 \times kW) / V$
	Cylinder Force (Horizontal Tension)		$F = 0.0785 \times D^2 \times P$
	Cylinder Force (Horizontal Compression)		$F = 0.0785 \times (D^2-d^2) \times P$
	Cylinder Force(Vertical) (F1: Cylinder Propelling Force)	Vertical Down	$F = F1 + (m \times g)$
		Vertical Up	$F = F1 - (m \times g)$
	Vertical Free Fall		$F = m \times g$
	Friction force of Horizontal Moving Conveyor Belt(Apply general friction Coefficient 0.1~0.2)		$F = m \times g \times \mu$
	Effective Mass (m_e)		$m_e = (2 \times E_T) / V^2$ (In case of Horizontal Movement $m_e = m$)
Impact Velocity	Free Fall		$V = \sqrt{2 \times g \times H}$
	Acceleration (ex: Pneumatic Cylinder)		$V = \frac{2D}{t}$ (D=Distance)
	No Acceleration(Hydraulic Cylinder, Motor)		$V = \frac{D}{t}$ (D=Distance)
Deceleration (a)			$a = V^2 / (2 \times S)$
Stopping Time (t)			$t = \frac{2 \times S}{0.8 \times V}$

1kgf = 9.81N , 1Nm = 1J , 1MPa = 10bar = 10.2kg/cm^2 , 1g = 9.8m/s^2

KOBA Shock Absorber's Movement

A. Vertical Movement(Free Fall)

- Weight m=1200kg
- Free Fall Height H=0.5m
- Impact Cycle C=250/h

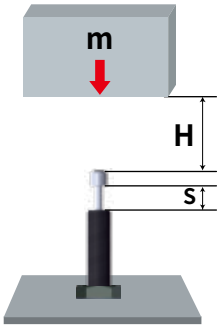

$E_K = m \cdot g \cdot H = 1200 \times 9.8 \times 0.5 = 5880Nm$

Model Temporary : *KHA* 115 − 150 (*Stroke*: 150)

$E_W = m \cdot g \cdot S = 1200 \times 9.8 \times 0.15 = 1765Nm$

$E_T = E_K + E_W = 5880 + 1765 = 7645Nm$

$E_TC = E_T \cdot C = 7645 \times 250 = 1911250Nm/h$

$V = \sqrt{2 \cdot g \cdot H} = \sqrt{2 \times 9.8 \times 0.5} = 3.1m/sec$

$m_e = \frac{2 \cdot E_T}{V^2} = \frac{2 \times 7645}{3.1^2} = 1591kg$

Model : *KHA* 115 − 150

B. Horizontal Movement(Without Propelling Force)

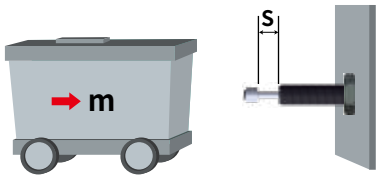

- Weight m=500kg
- Impact Cycle V=1.5m/s
- Impact Cycle C=200/h

$E_K = \frac{m \cdot V^2}{2} = \frac{500 \times 1.5^2}{2} = 562.5Nm$

Model Temporary : *KHA* 42-75 (*Stroke*: 75)

$E_W = 0$

$E_T = E_K + E_W = 562.5 + 0 = 562.5Nm$

$E_TC = E_T \cdot C = 562.5 \times 200 = 112500Nm/hr$

$m_e = \frac{2 \cdot E_T}{V^2} = \frac{2 \times 562.5}{1.5^2} = 500kg$

Model : *KHA* 42 − 75

C. Horizontal Movement(With Propelling Force)

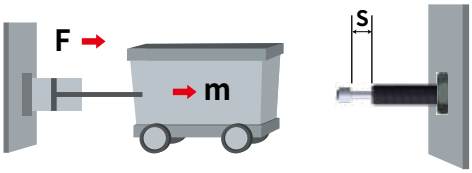

- Weight m=800kg
- Working Pressure P=5bar
- Impact Velocity V=1.8m/s
- Impact Cycle C=200/h
- Cylinder Bore d=80mm

$E_K = \frac{m \cdot V^2}{2} = \frac{800 \times 1.8^2}{2} = 1296Nm$

$F = 0.0785 \cdot d^2 \cdot P = 0.0785 \times 80^2 \times 5 = 2512N$

Model Temporary : *KHA* 64 −100(*Stroke*: 100)

$E_W = F \cdot S = 2512 \times 0.1 = 251.2Nm$

$E_T = E_K + E_W = 1296 + 251.2 = 1547.2Nm$

$E_TC = E_T \cdot C = 1547.2 \times 200 = 309440Nm/h$

$m_e = \frac{2 \cdot E_T}{V^2} = \frac{2 \times 1547.2}{1.8^2} = 955.1kg$

Model : *KHA* 64 − 100 *or* *KHA* 85 − 50

D. Horizontal Movement(With Motor's Propelling Force)

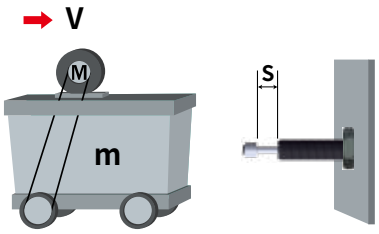

- Weight m=1200kg
- Impact Velocity V=1.6m/s
- Motor Output P=1kW
- Impact Cycle C=130/h

$E_K = \frac{m \cdot V^2}{2} \quad \frac{1200 \times 1.6^2}{2} \quad 1536Nm$

$F = \frac{3000 \cdot P}{V} = \frac{3000 \times 1}{1.6} = 1875N$

Model Temporary : *KHA* 64 - 100(*Stroke*: 100)

$E_W = F \cdot S = 1875 \times 0.1 = 187.5Nm$

$E_T = E_K + E_W = 1536 + 187.5 = 1723.5Nm$

$E_T C = E_T \cdot C = 1723.5 \times 130 = 224055Nm/h$

$m_e = \frac{2 \cdot E_T}{V^2} = \frac{2 \times 1723.5}{1.6^2} = 1346.5kg$

Model: *KHA* 64 - 100 *or* *KHA* 85 − 50

E. Horizontal Movement(Driven Roller Free-Flow System)

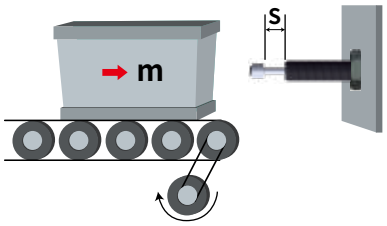

- Weight m=50kg
- Friction Coefficient μ=0.3
- Impact VelocityV=1.5m/s
- Impact Cycle C=100/h

$$E_K = \frac{m \cdot V^2}{2} = \frac{50 \times 1.5^2}{2} = 56.3Nm$$

$$F = m \cdot g \cdot \mu = 50 \times 9.8 \times 0.3 = 147N$$

Model Temporary : *KMA* 25 – 25(*Stroke*: 25)

$$E_W = F \cdot S = 147 \times 0.025 = 3.7Nm$$

$$E_T = E_K + E_W = 56.3 + 3.7 = 60Nm$$

$$E_TC = E_T \cdot C = 60 \times 100 = 6000Nm/h$$

$$m_e = \frac{2 \cdot E_T}{V^2} = \frac{2 \times 60}{1.5^2} = 53.3kg$$

Model: *KMA* 25 – 25

F. Free Fall according to incline

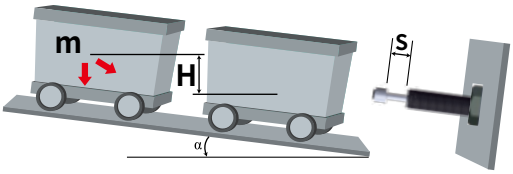

- Weight m=60kg
- Inclination Angle α=25
- Free Fall Height H=0.3m
- Impact Cycle C=200/h

$$E_K = m \cdot g \cdot H = 60 \times 9.8 \times 0.3 = 176.4Nm$$

$$F = m \cdot g \cdot \sin\alpha = 60 \times 9.8 \times 0.42 = 247N$$

Model Temporary : *KMA* 36 – 50(*Stroke*: 50)

$$E_W = F \cdot S = 247 \times 0.05 = 12.4Nm$$

$$E_T = E_K + E_W = 176.4 + 12.4 = 188.8Nm$$

$$E_TC = E_T \cdot C = 188.8 \times 200 = 37760Nm/h$$

$$V = \sqrt{2 \cdot g \cdot H} = \sqrt{2 \times 9.8 \times 0.3} = 2.4m/s$$

$$m_e = \frac{2 \cdot E_T}{V^2} = \frac{2 \times 188.8}{2.4^2} = 65.6kg$$

Model: *KMA* 36 – 50 *or* *KHA* 42 – 25

G. Vertical Movement
(With Propelling Force)

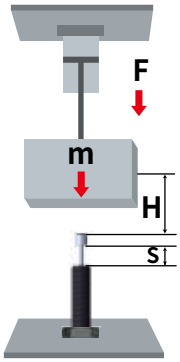

- Weight m=500kg
- Cylinder Bore d=100mm
- Working Pressure P=5bar
- Impact Velocity V=1m/s
- Impact Cycle C=250/h

$$E_K = \frac{m \cdot V^2}{2} = \frac{500 \times 1^2}{2} = 250\,Nm$$

$$F = 0.0785 \cdot d^2 \cdot P + m \cdot g$$

$$= 0.0785 \times 100^2 \times 5 + 500 \times 9.8 = 8825N$$

Model Temporary : *KHA* 64 – 50 (*Stroke*: 50)

$$E_W = F \cdot S = 8825 \times 0.05 = 441.3Nm$$

$$E_T = E_K + E_W = 250 + 441.3 = 691.3Nm$$

$$E_TC = E_T \cdot C = 691.3 \times 250 = 172825Nm/h$$

$$m_e = \frac{2 \cdot E_T}{V^2} = \frac{2 \times 691.3}{1^2} = 1382.6\,kg$$

Model : *KHA* 64 – 50

H. Vertical Movement
(With Propelling Force)

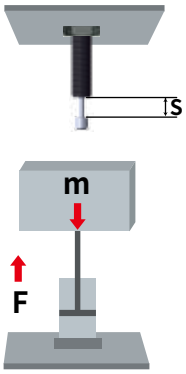

- Weight m=100kg
- Cylinder Bore d=125mm
- Working Pressure P=5bar
- Impact Velocity V=1.6m/s
- Impact Cycle C=200/h

$$E_K = \frac{m \cdot V^2}{2} = \frac{100 \times 1.6^2}{2} = 128Nm$$

$$F = 0.0785 \cdot d^2 \cdot P - m \cdot g$$

$$= 0.0785 \times 125^2 \times 5 - 100 \times 9.8 = 5152.8N$$

Model Temporary : *KHA* 42 – 50(*Stroke*: 50)

$$E_W = F \cdot S = 5152.8 \times 0.05 = 257.6Nm$$

$$E_T = E_K + E_W = 128 + 257.6 = 385.6Nm$$

$$E_TC = E_T \cdot C = 385.6 \times 200 = 77120\,Nm/h$$

$$m_e = \frac{2 \cdot E_T}{V^2} = \frac{2 \times 385.6}{1.6^2} = 301.25kg$$

Model : *KHA* 42 – 50

KOBA Shock Absorber's Movement

I. Swiveling Mass Without Propelling Force

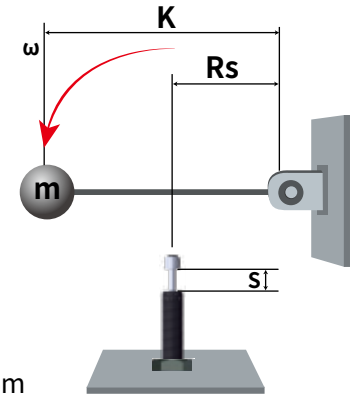

- Weight m=500kg
- Mass Velocity Vm=2m/s (From Mass Center)
- Rotation Radius K=0.8m
- Impact Cycle C=200/h
- Installation Location(Rs)=0.6m

$I(\text{Moment of Inertia}) = m \cdot K^2 = 500 \times 0.8^2 = 320 Nm/s^2$

$\omega = \frac{V}{K} = \frac{2}{0.8} = 2.5 rad/s$

$E_K = \frac{I \cdot \omega^2}{2} = \frac{320 \times 2.5^2}{2} = 1000 Nm$

$F = \frac{m \cdot g \cdot K}{Rs} = \frac{500 \times 9.8 / 0.8}{0.6} = 6533.3 N$

Model Temporary : KHA 85 − 50(Stroke: 50)

$E_W = F \cdot S = 6533.3 \times 0.05 = 326.7 Nm$

$E_T = E_K + E_W = 1000 + 326.7 = 1326.7 Nm$

$E_T C = E_T \cdot C = 1326.7 \times 200 = 265340 Nm/h$

$V = Rs \cdot \omega = 0.6 \times 2.5 = 1.5 m/s$ (at shock Absorber)

$m_e = \frac{2 \cdot E_T}{V^2} = \frac{2 \times 1326.7}{1.5^2} = 1179.3 kg$

Model : KHA 85 − 50

J. Swiveling Mass With Propelling Force

- Working Pressure P=5bar
- Weight m=600kg
- Angular Velocity ω=3rad/s
- Rotation Radius K=0.6m
- Installation Location(Rs) =0.8m
- Cylinder Bore d=80mm
- Cylinder Location r=0.6m
- Impact Cycle C=150/h

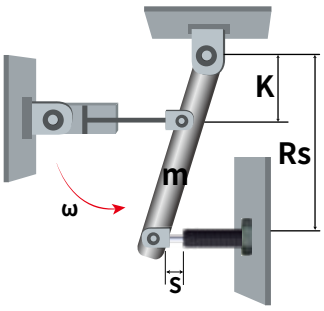

$I(\text{Moment of Inertia}) = m \cdot K^2 = 600 \times 0.6^2 = 216 Nm/s^2$

$E_K = \frac{I \cdot \omega^2}{2} = \frac{216 \times 3.0^2}{2} = 972 Nm$

$F = \frac{0.0785 \ d^2 \cdot P \cdot K}{Rs} = \frac{0.0785 \times 80^2 \times 5 \times 0.6}{0.8} = 1884 N$

Model Temporary : KHA 64 − 50(Stroke: 50)

$E_W = F \cdot S = 1884 \times 0.05 = 94.2 Nm$

$E_T = E_K + E_W = 972 + 94.2 = 1066.2 Nm$

$E_T C = E_T \cdot C = 1066.2 \times 150 = 159930 Nm/h$

$V = Rs \cdot \omega = 0.8 \times 3 = 2.4 m/s$ (at shock Absorber)

$m_e = \frac{2 \cdot E_T}{V^2} = \frac{2 \times 1066.2}{2.4^2} = 370.2 kg$

Model : KHA 64 − 50

K. Horizontal Rotation Movement

- Weight m=50kg
- Angular Velocity ω=1.5rad/s
- Impact Cycle C=140/h
- Rotation Radius K=0.8m
- Installation Location(Rs) =0.6m

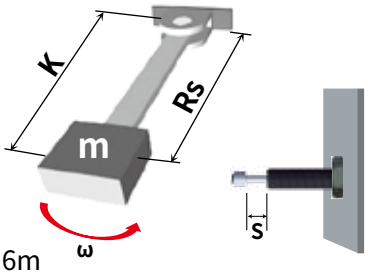

$I(\text{Moment of Inertia}) = m \cdot K^2 = 50 \times 0.8^2 = 32 Nm/s^2$

$E_K = \frac{I \cdot \omega^2}{2} = \frac{32 \times 1.5^2}{2} = 36 Nm$

Model Temporary : KMA 25 − 25(Stroke: 25)

$E_W = 0$

$E_T = E_K + E_W = 36 + 0 = 36 Nm$

$E_T C = E_T \cdot C = 36 \times 140 = 5040 Nm/h$

$V = Rs \cdot \omega = 0.6 \times 1.5 = 0.9 m/s$ (at shock Absorber)

$m_e = \frac{2 \cdot E_T}{V^2} = \frac{2 \times 36}{0.9^2} = 88.9 kg$

Model : KMA 25 − 25

L. Horizontal Rotation Movement(With Torque)

- Weight m=120kg
- Angular Velocity ω=2.0rad/s
- Impact Cycle C=160/h
- Rotation Radius K=0.9m
- Torque T=130Nm
- Installation Location(Rs) =0.6m

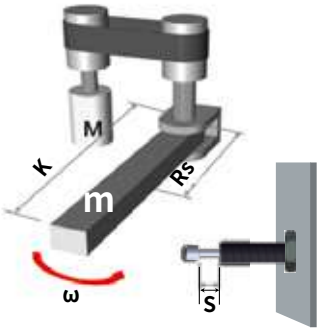

$I(\text{Moment of Inertia}) = m \cdot K^2 = 120 \times 0.9^2 = 97.2 Nm/s^2$

$E_K = \frac{I \cdot \omega^2}{2} = \frac{97.2 \times 2.0^2}{2} = 194.4 Nm$

$F = \frac{T}{Rs} = \frac{130}{0.6} = 217 N$

Model Temporary : KMA 36 − 50(Stroke: 50)

$E_W = F \cdot S = 217 \times 0.05 = 10.9 Nm$

$E_T = E_K + E_W = 194.4 + 10.9 = 205.3 Nm$

$E_T C = E_T \cdot C = 205.3 \times 160 = 32848 Nm/h$

$V = Rs \cdot \omega = 0.6 \times 2.0 = 1.2 m/s$

$m_e = \frac{2 \cdot E_T}{V^2} = \frac{2 \times 205.3}{1.2^2} = 285.1 kg$

Model : KMA 36 − 50 or KHA 42−25

KOBA
BEST SHOCK ABSORBER

Hydraulic Shock Absorbers

KMA Series

KMS Series

KSA Series

KHA Series

Oil Tank & Check Valve Series

KMA Series Adjustable Type

When the object collides, the Piston Rod is pushed into the Body, and Oil is stored in the Accumulator through Groove formed along the outer space of Inner Tube. During the process, kinetic energy is converted into heat energy and the heat is dissipated into atmosphere and then damping force occur. The Piston Rod is returned to the original position by the power of Return Spring.

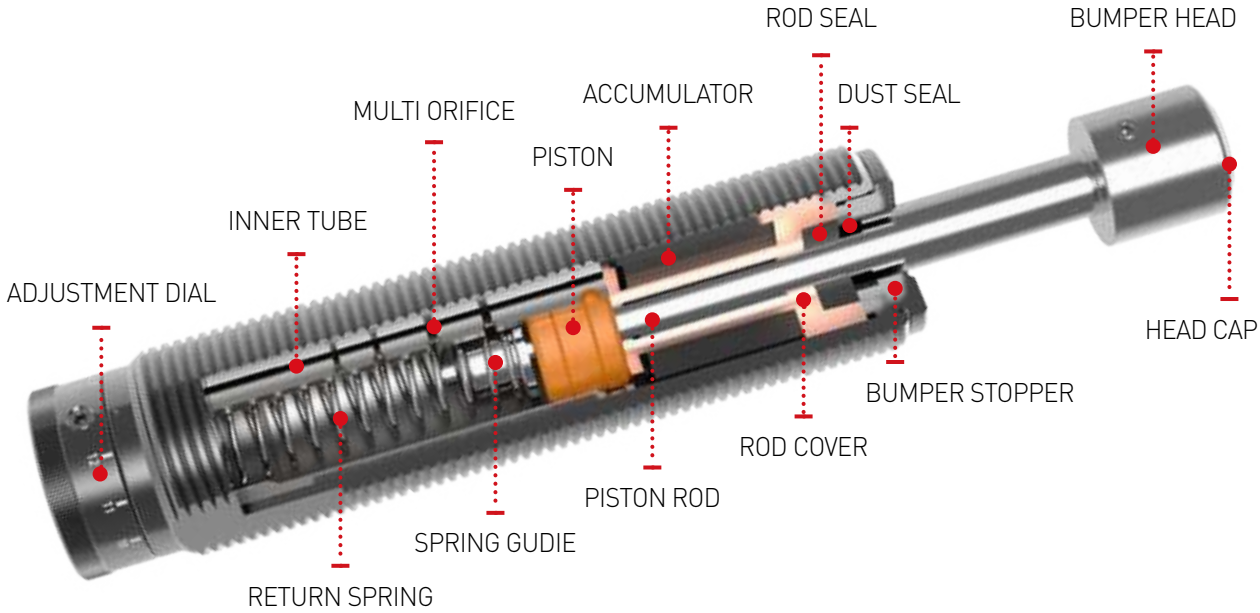

Feature

- Adjustable to control damping force according to impact velocity by 12 steps from 0° to 300°.
- KMS Series is made as one Body type, that makes it solid and solves piston shooting trouble.
- Fully threaded Body for hifhest mounting flexibility and improved thermal energy dissipation to the atmosphere.
- Thanks to full threaded Body KMS Series is easy to be installed and precise location fixing is possible. And surface area is increased to dissipate thermal energy fast to atmosphere.
- Piston Rod is made of anticorrosion material and Rod Cover is made of long lasting material with function of seal protection and that enable to guarantee long life.
- Body surface is Electroless Ni plated or Alloy plated, so that strong to corrosion.
- Several options of Bumper Head material - steel, black standard PU, green soft PU
- Velocity ranges : 0.3~5.0m/s, Low Velocity(LV) 0.08~1.3m/s
- Temperature ranges : -10~80°C
- Special specification custom made : Can be made to order according to characteristics such as thead, stainless, low temperature and high temperature.
  : Option -40~120°C(Special oil and seal)

Application

✓ Pick N place Robot, Packing Machine, Machine Tool, Automobile Assembly Line, Tire Manufacturing Line, Casting Plant, Crane, Safety devices and all other areas of multi purposes.

KMA Series Ordering Information

KMA 14 - 12 B N LV - SC

- **SC** — Accessory Series
  - SC : Stop Collar
  - SL : Side Load Adaptor
  - CM : Clamp Mount
  - RF : Rectangular Flange
  - LN : Lock Nut
- **LV** — No Symbol / Low Velocity
- **N** — No Symbol : Alloy Plate(Black) / Electroless Ni plating
- **B** — No Bumper Head / S : Steel Head / B : Steel+Hard Cap(Black) / G : Steel+Soft Cap(Green)
- **12** — Stroke
- **14** — Body Thread Size
- **KMA** — KM : Series / A : Adjustable Type

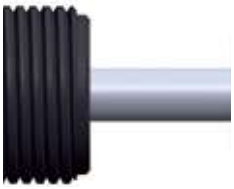

Accessory Series Charts

Accessories	Stop Collar	Side Load Adapter	Clamp Mount	Rectangular Flange
Symbols / Model	SC	SL	CM	RF
KMA08-06	●		●	
KMA10-07	●	●	●	
KMA12-14	●	●	●	
KMA14-12	●	●	●	
KMA16-12	●	●	●	
KMA20-16	●	●	●	
KMA25-25	●	●	●	
KMA27-25	●	●	●	
-40	●		●	
KMA30-35	●	●	●	
KMA33-25	●	●	●	●
-50	●		●	●
KMA36-25	●	●	●	●
-50	●		●	●

KMA10 - 07(B)

Engineering Data

Model	Stroke (mm) St	Max.Energy /Cycle(Nm) E_T	Max.Energy /Hour(Nm/h) E_TC	Effective Weight (kg) m_e	Recoil Force (N)		Weight (g)
					Ext	Comp	
KMA08-06(B)	6	3	4,800	0.55-65	2.4	5.4	15
KMA10-07(B)	7	5.5	15,000	1-123	3	7	21

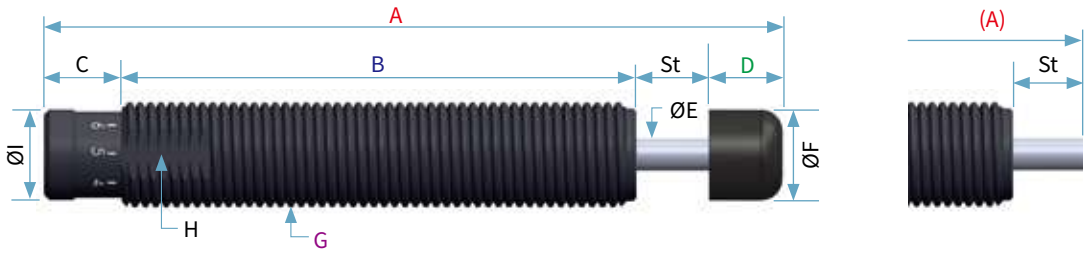

Dimensions (unit : mm)

Model	St	A(A)	B	C	D	ØE	ØF	G	H	ØI
KMA08-06(B)	6	59(52)	40.5	5.5	7	2	6.8	M8X1.0P	SW:6.8	6.8
KMA10-07(B)	7	71(64)	49.5	7.5	7	3	8.6	M10X1.0P	SW:8.8	8.6

KMA12 - 14(B) / KMA14 - 12(B)

Engineering Data

Model	Stroke (mm) St	Max.Energy /Cycle(Nm) E_T	Max.Energy /Hour(Nm/h) E_TC	Effective Weight (kg) m_e	Recoil Force (N)		Weight (g)
					Ext	Comp	
KMA12-14(B)	14	21.5	35,000	4-477	3.7	9.6	33
KMA14-12(B)	12	21.5	45,000	1.5-494	3.6	9.8	55
-12(B)LV				25.4-1,650			

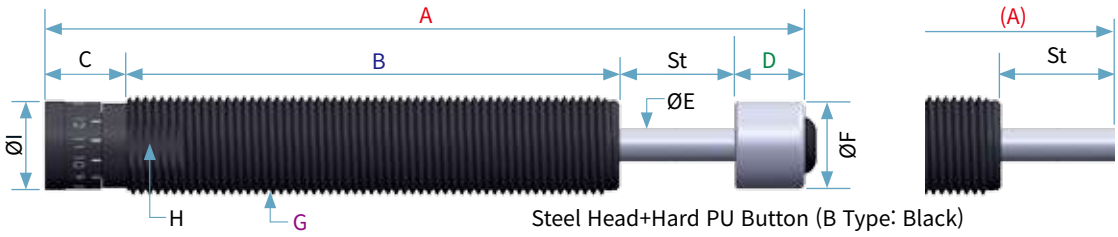

Steel Head+Hard PU Button (B Type: Black)

Steel Head(S Type)

Steel Head+Soft PU Button
(G Type : Green)

Dimensions (unit : mm)

Model	St	A(A)	B	C	D	ØE	ØF	G	H	ØI
KMA12-14(B)	14	94(84)	61	9	10	4	10.5	M12X1.0P	SW:10.5	10.7
KMA14-12(B)	12	97.5(87.5)	63.5	12	10	4	10.5	M14X1.5P	SW:12	12
-12(B)LV	12	97.5(87.5)	63.5	12	10	4	10.5	M14X1.5P	SW:12	12

KMA16 - 12(B)

Engineering Data

Model	Stroke (mm) St	Max.Energy /Cycle(Nm) E_T	Max.Energy /Hour(Nm/h) E_TC	Effective Weight (kg) m_e	Recoil Force (N)		Weight (g)
					Ext	Comp	
KMA16-12(B)	12	27	51,000	2-527	4.9	11.4	80
-12(B)LV				31.9-3,375			

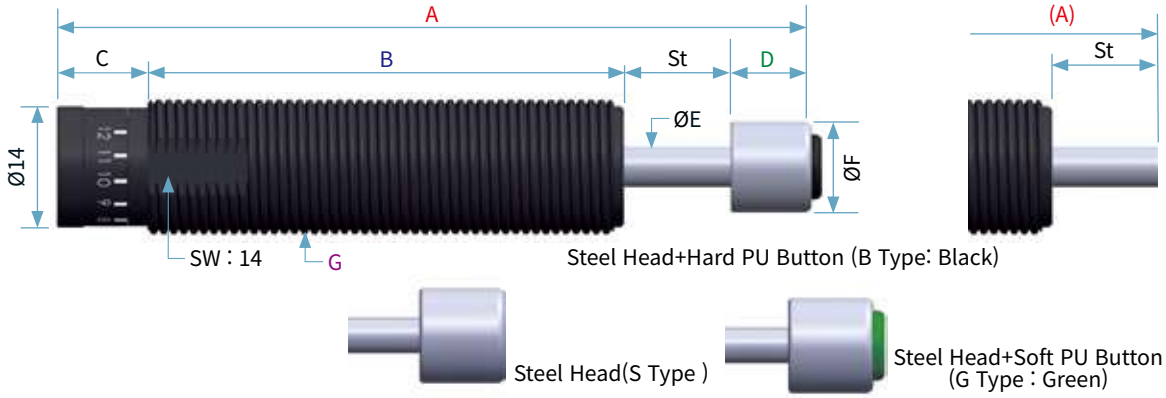

Dimensions (unit : mm)

Model	St	A(A)	B	C	D	ØE	ØF	G
KMA16-12(B) / 12(B)LV	12	98(88)	63.5	12.5	10	4	10.5	M16X1.5P

KMA20 - 16(B)

Engineering Data

Model	Stroke (mm) St	Max.Energy /Cycle(Nm) E_T	Max.Energy /Hour(Nm/h) E_TC	Effective Weight (kg) m_e	Recoil Force (N)		Weight (g)
					Ext	Comp	
KMA20-16(B)	16	61	63,000	4.5-1,230	8	19.6	145
-16(B)LV				72.1-5,600			

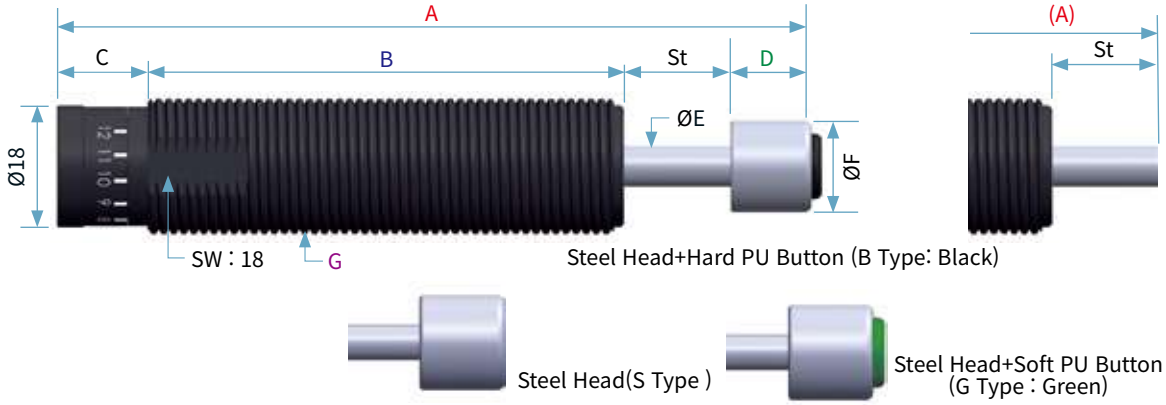

Dimensions (unit : mm)

Model	St	A(A)	B	C	D	ØE	ØF	G
KMA20-16(B) / 16(B)LV	16	114(100.5)	71	13.5	13.5	6	13.5	M20X1.5P

KMA25 - 25(B)

Engineering Data

Model	Stroke (mm) St	Max.Energy /Cycle(Nm) E_T	Max.Energy /Hour(Nm/h) E_TC	Effective Weight (kg) m_e	Recoil Force (N)		Weight (g)
					Ext	Comp	
KMA25-25(B)	25	177	113,000	8.3-2,150	10.2	29.5	285
-25(B)LV				209.4-15,750			

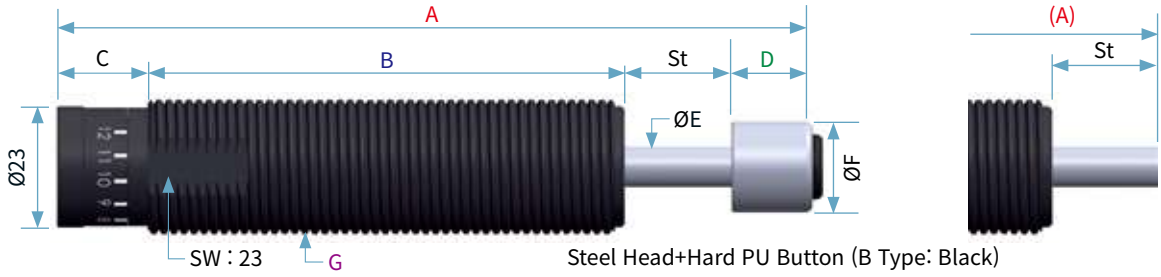

Steel Head+Hard PU Button (B Type: Black)

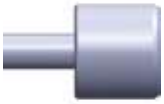

Steel Head(S Type)

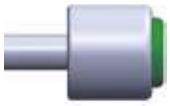

Steel Head+Soft PU Button (G Type : Green)

Dimensions (unit : mm)

Model	St	A(A)	B	C	D	ØE	ØF	G
KMA25-25(B) / -25(B)LV	25	143.5(127)	90	12	16.5	8	16	M25x1.5P

KMA27 Series

Engineering Data

Model	Stroke (mm) St	Max.Energy /Cycle(Nm) E_T	Max.Energy /Hour(Nm/h) E_TC	Effective Weight (kg) m_e	Recoil Force (N)		Weight (g)
					Ext	Comp	
KMA27-25(B)	25	177	113,000	8.3-2,150	10.2	29.5	305
-25F(B)							
-25(F)(B)LV				209.4-15,750			

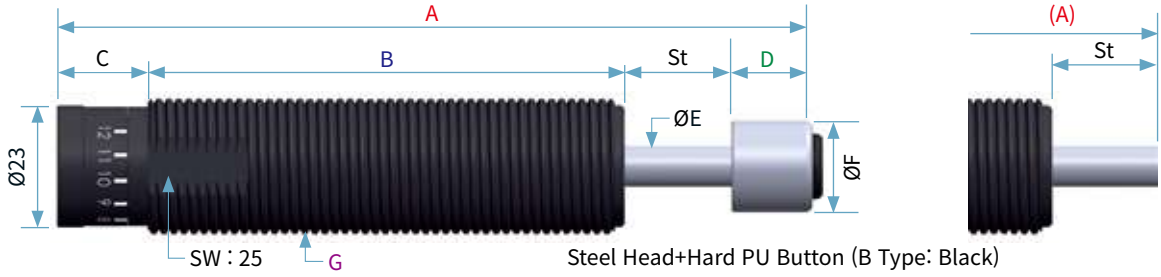

Steel Head+Hard PU Button (B Type: Black)

Steel Head(S Type)

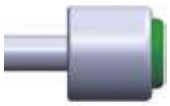

Steel Head+Soft PU Button (G Type : Green)

Dimensions (unit : mm)

Model	St	A(A)	B	C	D	ØE	ØF	G
KMA27-25(B) -25F(B)	25	143.5(127)	90	12	16.5	8	16	M27x3.0P
-25(F)(B)LV								M27x1.5P

KMA27 Series

Engineering Data

Model	Stroke (mm) St	Max.Energy /Cycle(Nm) E_T	Max.Energy /Hour(Nm/h) E_TC	Effective Weight (kg) m_e	Recoil Force (N)		Weight (g)
					Ext	Comp	
KMA27-40(B)	40	283	149,000	20-5,120	10	31	429
-40(B)LV				334.9-25,200			

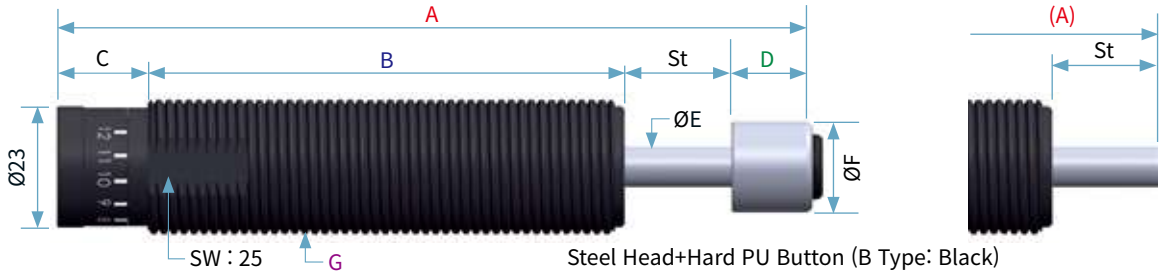

Steel Head+Hard PU Button (B Type: Black)

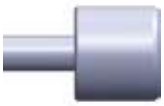

Steel Head(S Type)

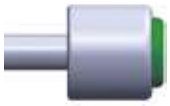

Steel Head+Soft PU Button (G Type : Green)

Dimensions (unit : mm)

Model	St	A(A)	B	C	D	ØE	ØF	G
KMA27-40(B)	40	194.5(178)	126	12	16.5	8	16	M27x2.0P

KMA30 - 35(B)

Engineering Data

Model	Stroke (mm) St	Max.Energy /Cycle(Nm) E_T	Max.Energy /Hour(Nm/h) E_TC	Effective Weight (kg) m_e	Recoil Force (N)		Weight (g)
					Ext	Comp	
KMA30-35(B)	35	356	137,000	25-6,950	17.8	50.3	610

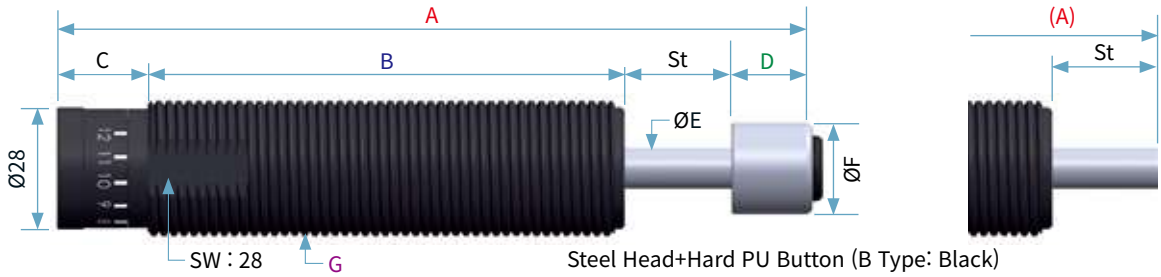

Steel Head+Hard PU Button (B Type: Black)

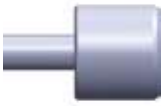

Steel Head(S Type)

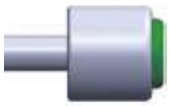

Steel Head+Soft PU Button (G Type : Green)

Dimensions (unit : mm)

Model	St	A(A)	B	C	D	ØE	ØF	G
KMA30-35(B)	35	203.5(179.5)	128.5	16	24	10	28	M30x1.5P

KMA33 Series

Engineering Data

Model	Stroke (mm) St	Max.Energy /Cycle(Nm) E_T	Max.Energy /Hour(Nm/h) E_TC	Effective Weight (kg) m_e	Recoil Force (N)		Weight (g)
					Ext	Comp	
KMA33-25(B)	25	314	120,000	25-6,980	17.5	48.8	454
-25(B)LV				97-60,930			
-50(B)	50	628	150,000	50-14,000	13.6	65.3	580
-50(B)LV				192-120,312			

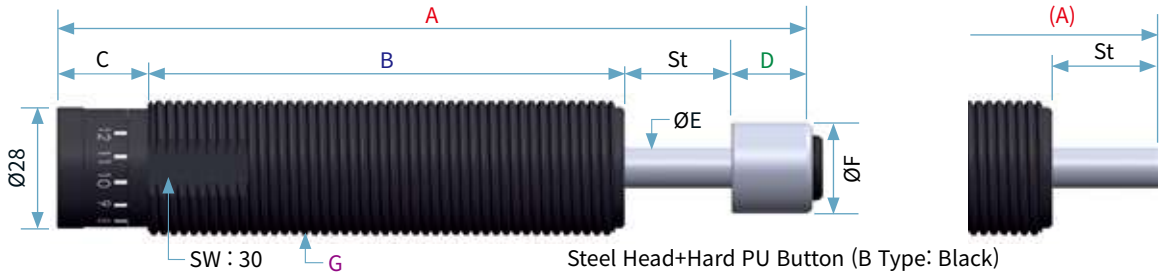

Steel Head+Hard PU Button (B Type: Black)

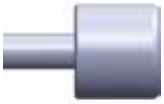

Steel Head(S Type)

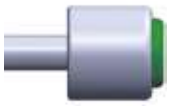

Steel Head+Soft PU Button (G Type : Green)

Dimensions (unit : mm)

Model	St	A(A)	B	C	D	ØE	ØF	G
KMA33-25(B) / -25(B)LV	25	170(146)	105	16	24	10	28	M33x1.5P
KMA33-50(B) / -50(B)LV	50	229(205)	139	16	24	10	28	M33x1.5P

KMA36 Series

Engineering Data

Model	Stroke (mm) St	Max.Energy /Cycle(Nm) E_T	Max.Energy /Hour(Nm/h) E_TC	Effective Weight (kg) m_e	Recoil Force (N)		Weight (g)
					Ext	Comp	
KMA36-25(B)	25	346	125,000	25-6,980	25	56.2	725
-25(B)LV				97-60,930			
-50(B)	50	692	160,000	50-14,000	22.5	60	885
-50(B)LV				192-120,312			

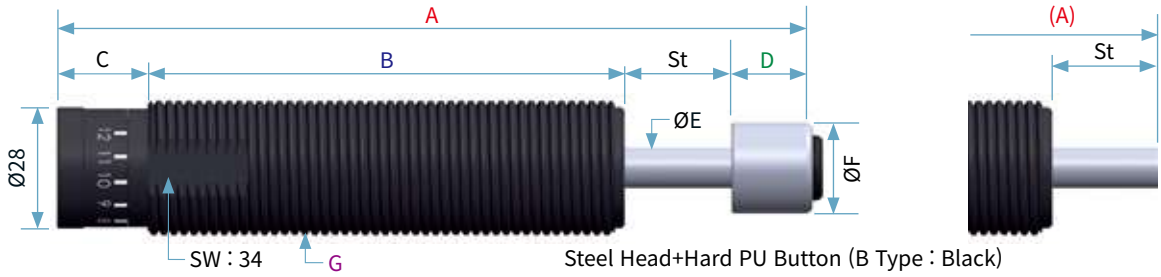

Steel Head+Hard PU Button (B Type : Black)

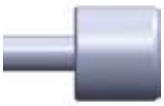

Steel Head(S Type)

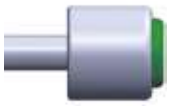

Steel Head+Soft PU Button (G Type : Green)

Dimensions (unit : mm)

Model	St	A(A)	B	C	D	ØE	ØF	G
KMA36-25(B) / -25(B)LV	25	170(146)	105	16	24	10	28	M36x1.5P
KMA36-50(B) / -50(B)LV	50	229(205)	139	16	24	10	28	M36x1.5P

KMA Accessories

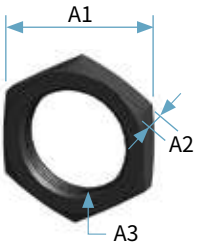

Lock Nut

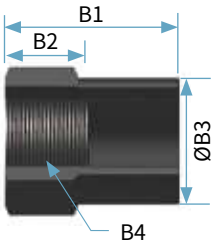

Stop Collar

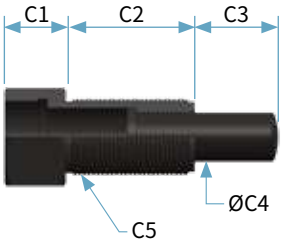

Side Load Adapter

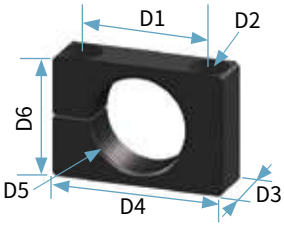

Clamp Mount

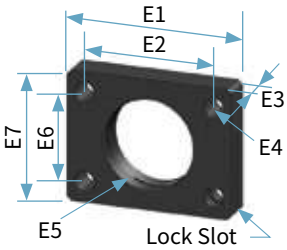

Rectangular Flange

(unit : mm)

Accessory / Model	Lock Nut			Stop Collar				Side Load Adapter				
	A1	A2	A3	B1	B2	ØB3	B4	C1	C2	C3	ØC4	C5
KMA08-06	12	3	M8X1.0P	20	8	11.5	M8X1.0P	-	-	-	-	-
KMA10-07	13	4	M10X1.0P	20	8	12.8	M10X1.0P	12	12.5	7	4	M10X1.0P
KMA12-14	14	4	M12X1.0P	20	8	13.8	M12X1.0P	13	22.5	14	5	M12X1.0P
KMA14-12	19	5	M14X1.5P	27	12	18	M14X1.5P	14	19.5	12	6	M14X1.5P
KMA16-12	19	6	M16X1.5P	27	12	19	M16X1.5P	19	22.8	12	8	M16X1.5P
KMA20-16	24	6	M20X1.5P	36	15	24	M20X1.5P	20	34	16	12	M20X1.5P
KMA25-25	32	8	M25X1.5P	42	18	31.5	M25X1.5P	20	42	25	16	M25X1.5P
KMA27-25 -40	32	8	Thread	42	18	31.5	Thread	20 -	42 -	25 -	16 -	Thread -
KMA30-35	36	8	M30X1.5P	52	20	35	M30X1.5P	25	57	35	20	M30X1.5P
KMA33-25 -50	46	8	M33X1.5P	62	26	45	M33X1.5P	22 -	47 -	25 -	20 -	M33X1.5P -
KMA36-25 -50	46	10	M36X1.5P	62	26	45	M36X1.5P	22 -	47 -	25 -	20 -	M36X1.5P -

Accessory / Model	Clamp Mount						Rectangular Flange						
	D1	D2	D3	D4	D5	D6	E1	E2	E3	E4	E5	E6	E7
KMA08-06	16	Bolt : M4	10	25	M8X1.0P	14	-	-	-	-	-	-	-
KMA10-07	16	Bolt : M4	10	25	M10X1.0P	14	-	-	-	-	-	-	-
KMA12-14	20	Bolt : M5	12	32	M12X1.0P	16	-	-	-	-	-	-	-
KMA14-12	20	Bolt : M5	12	32	M14X1.5P	20	-	-	-	-	-	-	-
KMA16-12	24	Bolt : M6	16	36	M16X1.5P	22	-	-	-	-	-	-	-
KMA20-16	28	Bolt : M6	20	40	M20X1.5P	25	-	-	-	-	-	-	-
KMA25-25	32	Bolt : M6	25	46	M25X1.5P	32	-	-	-	-	-	-	-
KMA27-25 -40	35	Bolt : M6	25	48	Thread	32	-	-	-	-	-	-	-
KMA30-35	39	Bolt : M6	25	53	M30X1.5P	37	-	-	-	-	-	-	-
KMA33-25 -50	42	Bolt : M6	25	56	M33X1.5P	40	51	41	10	4-Ø7	M33X1.5P	29	45
KMA36-25 -50	45	Bolt : M6	25	61	M36X1.5P	42	51	41	10	4-Ø7	M36X1.5P	29	45

KMA Accessories Installation

NAME	Accessories	Installation	Remark
Lock Nut			As a basic mounting way, by using Lock nut shock absorber can be installed nut, easily.
Stop Collar + Lock Nut			Stop Collar makes it easy to stop precisely and easy to select location to set and it prevents troubles so called bottom-out(piston shooting) problem in the position.
Side Load Adapter + Lock Nut			Main application is rotational motion control, and when the center distance of the shock absorber is inevitably short, it can helps to prevents prevents one sided wear trouble of Shock Absorber Piston Rod.
Flange Mount			By using Flange or Rectangular Flange, Shock Absorber can be fixed conveniently.
Clamp Mount			By Clamp Mount location adjustment and installation are easy. It is possible to mount it on single side or both sides of shock absorber.

KMS Series Self Compensating Type

KMS is Slot Metering Type, which gradually decrease the impact force and smoothly stops when an object collides. Compared to existing products, the energy absorption capacity has increased by more than 200%, and the range of weight effect and absorption energy per hour is also increased.

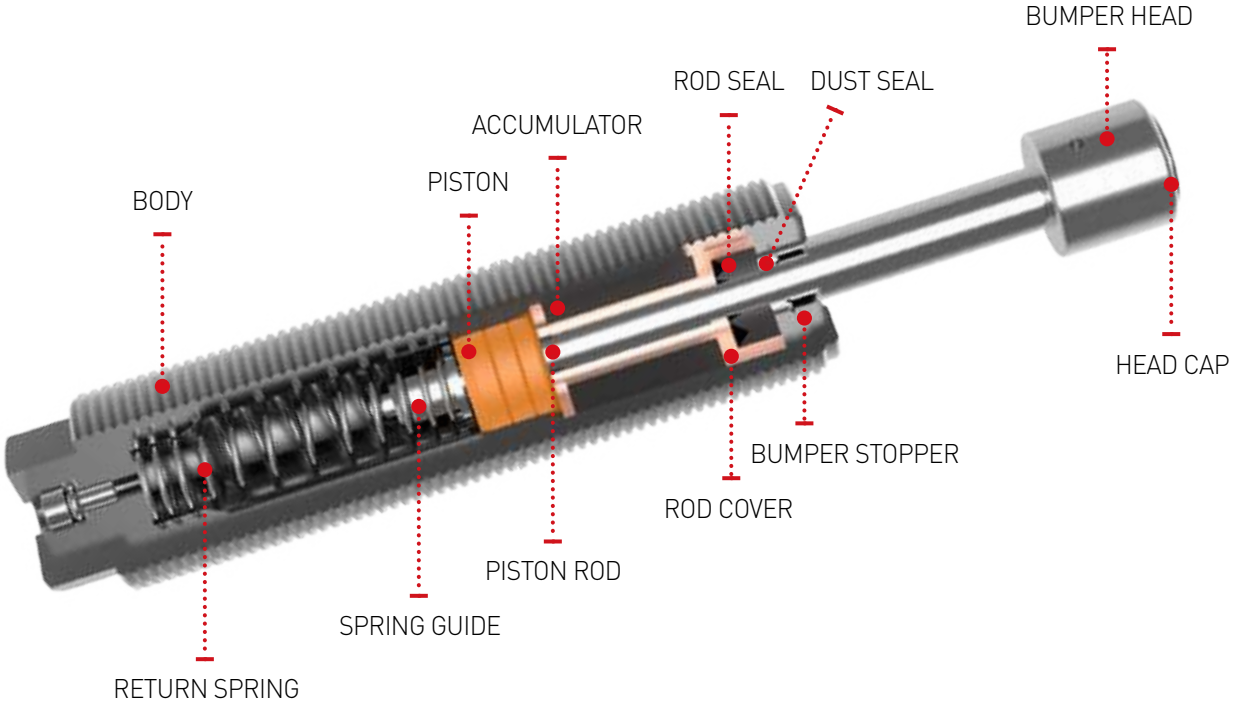

Feature

- As the piston size is increased, the energy absorption capactity is increased by 2~3 times compared to the existing products, and the energy per hour is upgraded with the increase of the oil amout, and the effective weight rane is widely increased.
- Shock Absorber Body is built as one body, not only robust but also fundamentally helpful to sovles problem so called bottom out trouble.
- Fully threaded Body for mounting flexibility and improved thermal energy dissipation to the atmosphere.
- Piston Rod is made of anticorrosion material and Rod Cover is made of long lasting material with function of seal protection and that enable to guarantee long life.
- Body surface is Electroless Ni plated or Alloy plated, so that strong to corrosion.
- Several options of Bumper Head material - steel, black standard PU, green soft PU
- Velocity ranges : 0.3~5.0m/s
- Temperature ranges : -10~80°C
- Special specification custom made : Can be made to order according to characteristics such as thead, stainless, low temperature and high temperature.
  : Option -40~120°C(Special oil and seal)

Application

✓ Pick N place Robot, Packing Machine, Machine Tool, Automobile Assembly Line, Tire Manufacturing Line, Casting Plant, Crane, Safety devices and all other areas of multi purposes.

KMS Series Ordering Information

KMS 10 - 08 B N 2 - SC

- SC : Accessory Series
  - SC : Stop Collar
  - CM : Clamp Mount
  - RF : Rectangular Flange
  - LN : Lock Nut
- 2 : Effective Weight : 1,2,3
- N : No Symbol: Alloy Plate(Black) Electroless Ni plating
- B : No Symbol : No Bumper Head; S : Steelhead; B : Steel - Hard cap(Black); G : Steel - Soft cap(Green)
- 08 : Stroke
- 10 : Body Thread Size
- KMS : KM : Series; S : Self - adjustable

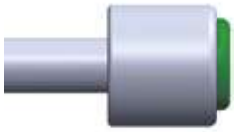

Accessory Series Charts

Accessories	Stop Collar	Clamp Mount	Rectangular Flange
Symbols / Model	SC	CM	RF
KMS 04-04			
KMS 05-05	●	●	
KMS 06-05	●	●	
KMS 08-06	●	●	
KMS 10-08	●	●	
KMS 12-10	●	●	
KMS 14-15	●	●	
-20	●	●	
KMS 20-20	●	●	
-30	●	●	
-50	●	●	
KMS 25-25	●	●	
-40	●	●	
-50	●	●	
-80	●	●	
KMS 36-25	●	●	●
-50	●	●	●
-80	●	●	●

KMS04 - 04, KMS05 - 05, KMS06 - 05

Engineering Data

Model	Stroke (mm) St	Max.Energy /Cycle(Nm) E_T	Max.Energy /Hour(Nm/h) E_TC	Effective Weight(kg) m_e			Recoil Force (N)		Weight (g)
				1	2	3	Ext.	Comp.	
KMS04-04	4	0.4	1,500	0.1-1.0	0.9-3.2	-	2	7	2.5
KMS05-05	5	0.6	1,800	0.1-1.2	1.0-5.0	-	2	7	2.5
KMS06-05	5	1	2,500	0.05-1	0.8-2.8	1.5-4	2	5	4.0

※ **KMS04/05/06 Series Body & Piston Rod stainless steel**

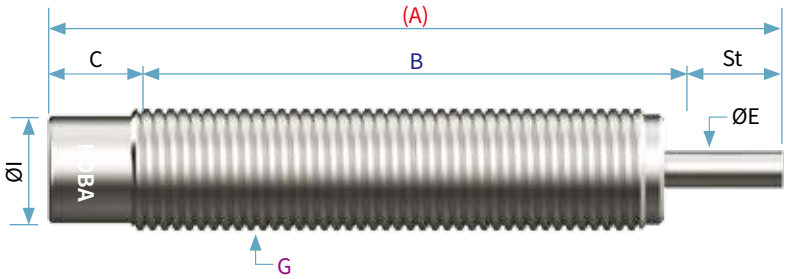

Dimensions (unit : mm)

Model	St	(A)	B	C	D	ØE	F	G	H	ØI
KMS04-04	4	30.5	24	2.5	-	1.2	-	M4x0.5P	-	3.4
KMS05-05	5	31	22.5	3.5	-	1.5	-	M5x0.5P	-	4.4
KMS06-05	5	33.5	25	3.5	-	1.5	-	M6x0.5P	-	5.3

KMS08 - 06(B), KMS10 - 08(B)

Engineering Data

Model	Stroke (mm) St	Max.Energy /Cycle(Nm) E_T	Max.Energy /Hour(Nm/h) E_TC	Effective Weight(kg) m_e			Recoil Force (N)		Weight (g)
				1	2	3	Ext.	Comp.	
KMS08-06(B)	6	5	8,000	0.8-2.8	2.5-12.6	10-111	2.2	5.8	10
KMS10-08(B)	8	11	14,500	1.8-6.1	5.5-27	22-244	2.5	6.9	15.5

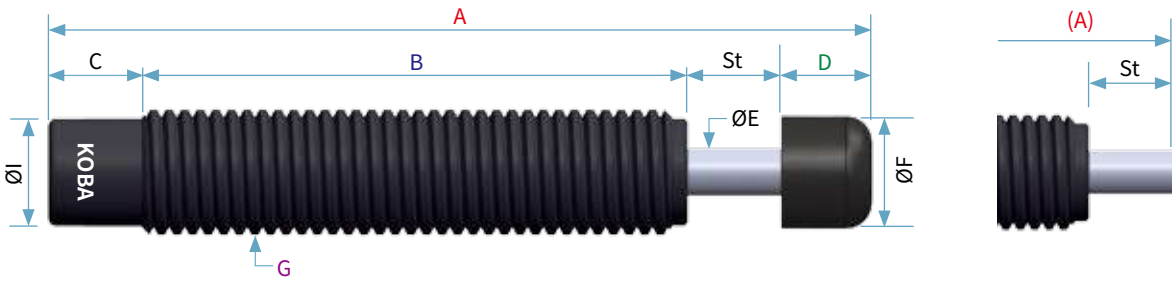

Dimensions (unit : mm)

Model	St	A(A)	B	C	D	ØE	ØF	G	H	ØI
KMS08-06(B)	6	54(47)	35	6	7	3	6.8	M8x1.0P	-	6.8
KMS10-08(B)	8	64(57)	44.5	4.5	7	3	8.6	M10x1.0P	-	8

KMS12 - 10(B), KMS14 Series

Engineering Data

Model	Stroke (mm) St	Max.Energy /Cycle(Nm) E_T	Max.Energy /Hour(Nm/h) E_TC	Effective Weight(kg) m_e			Recoil Force (N)		Weight (g)
				1	2	3	Ext.	Comp.	
KMS12-10(B)	10	18	34,000	2.9-10	9-44	36-400	3.7	9.6	23
KMS14-15(B)	15	34	51,000	5-18	17-84	68-755	3.8	13.3	43
-15F(B)									

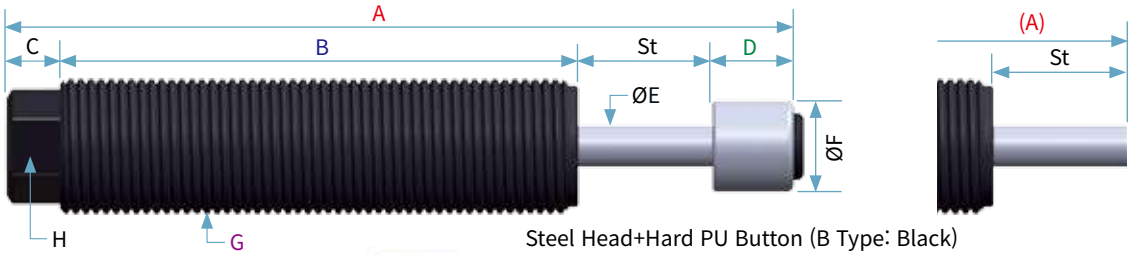

Steel Head+Hard PU Button (B Type: Black)

Steel Head(S Type)

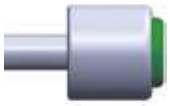

Steel Head+Soft PU Button (G Type : Green)

Dimensions (unit : mm)

Model	St	A(A)	B	C	D	ØE	ØF	G	H
KMS12-10(B)	10	79(69)	52.5	6.5	10	4	10.5	M12x1.0P	SW:8
KMS14-15(B)	15	100.5(90.5)	69	6.5	10	4	10.5	M14x1.5P	SW:10
-15F(B)								M14x1.0P	

KMS20-20(B)

Engineering Data

Model	Stroke (mm) St	Max.Energy /Cycle(Nm) E_T	Max.Energy /Hour(Nm/h) E_TC	Effective Weight(kg) m_e			Recoil Force (N)		Weight (g)
				1	2	3	Ext.	Comp.	
KMS20-20(B)	20	105	55,000	13-39	36-210	173-2,333	8.2	23	140

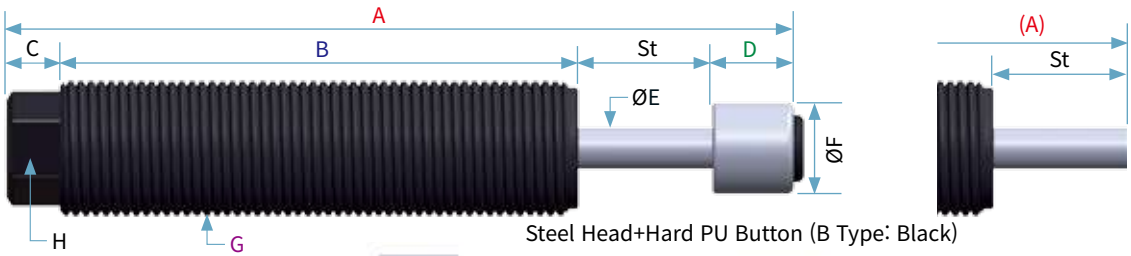

Steel Head+Hard PU Button (B Type: Black)

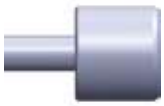

Steel Head(S Type)

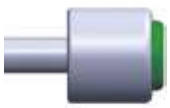

Steel Head+Soft PU Button (G Type : Green)

Dimensions (unit : mm)

Model	St	A(A)	B	C	D	ØE	ØF	G	H
KMS20-20(B)	20	118.5(105)	77	8	13.5	6	13.5	M20x1.5	SW:15

KMS25 Series

Engineering Data

Model	Stroke (mm) St	Max.Energy /Cycle(Nm) E_T	Max.Energy /Hour(Nm/h) E_TC	Effective Weight(kg) m_e			Recoil Force (N)		Weight (g)
				1	2	3	Ext.	Comp.	
KMS25-25(B)	25	226	69,000	28-85	78-452	373-5,022	11	29	265
-25F(B)									

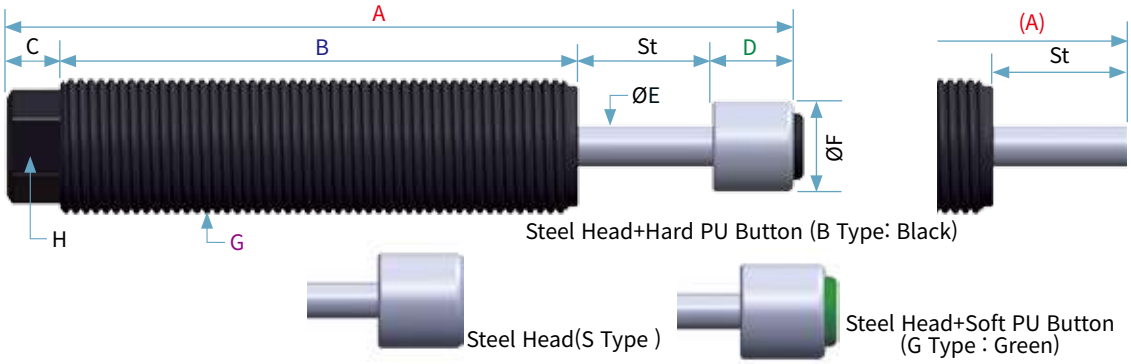

Dimensions (unit : mm)

Model	St	A(A)	B	C	D	ØE	ØF	G	H
KMS25-25(B)	25	141.5(125)	91	9	16.5	8	16	M25x2.0	SW:19
-25F(B)								M25x1.5	

KMS36 - 25(B)

Engineering Data

Model	Stroke (mm) St	Max.Energy /Cycle(Nm) E_T	Max.Energy /Hour(Nm/h) E_TC	Effective Weight(kg) m_e			Recoil Force (N)		Weight (g)
				1	2	3	Ext.	Comp.	
KMS36-25(B)	25	490	115,000	61-185	170-500	435-10,888	25	64.3	758

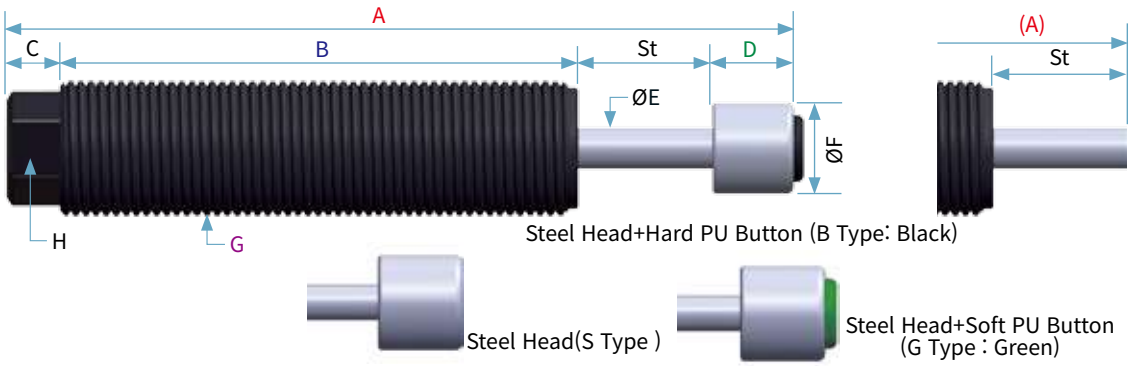

Dimensions (unit : mm)

Model	St	A(A)	B	C	D	ØE	ØF	G	H
KMS36-25(B)	25	164(140)	101	14	24	10	28	M36x1.5	SW:30

KMS LONG STROKE TYPE

KMS14 - 20(B)

Engineering Data

Model	Stroke (mm) St	Max.Energy /Cycle(Nm) E_T	Max.Energy /Hour(Nm/h) E_TC	Effective Weight(kg) m_e			Recoil Force (N)		Weight (g)
				1	2	3	Ext.	Comp.	
KMS14-20(B)	20	13	45,500	2-7	6.5-32	26-288	3.6	13.9	71

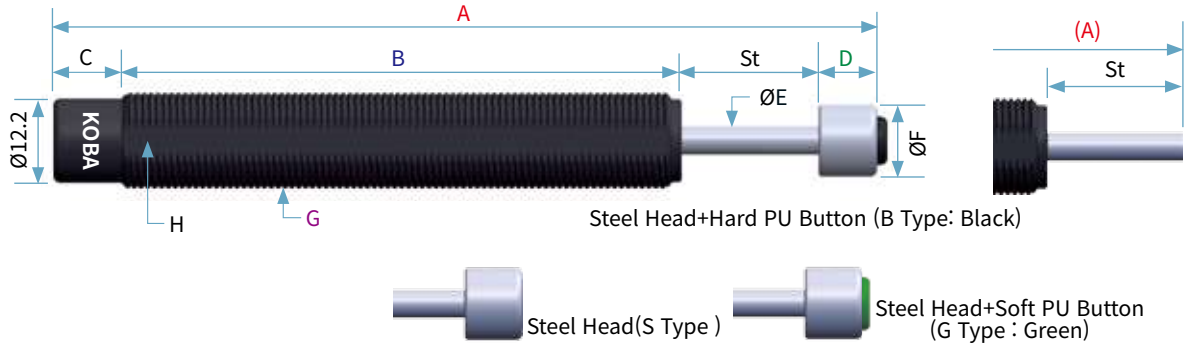

Dimensions (unit : mm)

Model	St	A(A)	B	C	D	ØE	ØF	G	H
KMS14-20(B)	20	121.5(111.5)	81.5	10	10	4	10.5	M14x1.0P	SW:12.5

KMS20 Series

Engineering Data

Model	Stroke (mm) St	Max.Energy /Cycle(Nm) E_T	Max.Energy /Hour(Nm/h) E_TC	Effective Weight(kg) m_e			Recoil Force (N)		Weight (g)
				1	2	3	Ext.	Comp.	
KMS20-30(B)	30	52	31,100	85-28	26-128	104-1,155	6.3	16.8	188
-50(B)	50	82	37,800	13-45	41-202	164-1,822	7.8	16.6	268.6

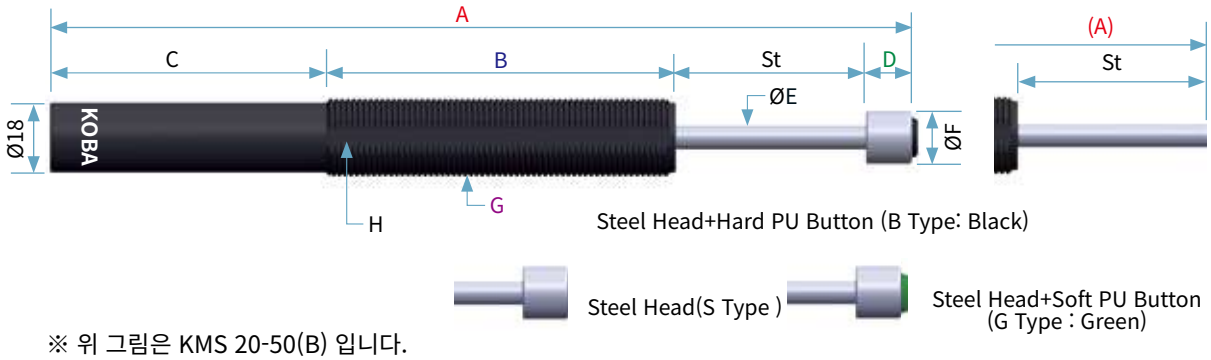

※ 위 그림은 KMS 20-50(B) 입니다.

Dimensions (unit : mm)

Model	St	A(A)	B	C	D	ØE	ØF	G	H
KMS20-30(B)	30	144.5(131)	90	11	13.5	6	13.5	M20x1.5P	SW:18
-50(B)	50	227.5(214)	91.5	72.5	13.5	6	13.5	M20x1.5P	SW:18

KMS25 Series

Engineering Data

Model	Stroke (mm) St	Max.Energy /Cycle(Nm) E_T	Max.Energy /Hour(Nm/h) E_TC	Effective Weight(kg) m_e			Recoil Force (N)		Weight (g)
				1	2	3	Ext.	Comp.	
KMS25-40(B)	40	110	94,000	18-60	55-271	220-2,444	13.7	30.9	342.5
-50(B)	50	120	41,000	19-66	60-296	240-2,666	13.9	30.5	457.5
-80(B)	80	160	54,200	26-88	80-395	320-3,555	14.9	29.8	577.5

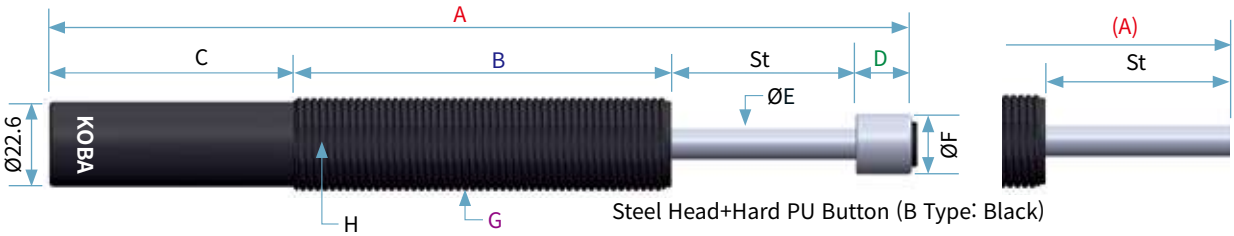

Steel Head+Hard PU Button (B Type: Black)

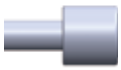

Steel Head(S Type)

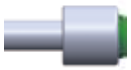

Steel Head+Soft PU Button
(G Type : Green)

Dimensions (unit : mm)

Model	St	A(A)	B	C	D	ØE	ØF	G	H
KMS25-40(B)	40	174.5(158)	106	12	16.5	8	16	M25x2.0P	SW:23
-50(B)	50	234.5(218)	102	66	16.5	8	16	M25x2.0P	SW:23
-80(B)	80	328.5(312)	142	90	16.5	8	16	M25x2.0P	SW:23

KMS36 Series

Engineering Data

(unti : mm)

Model	Stroke (mm) St	Max.Energy /Cycle(Nm) E_T	Max.Energy /Hour(Nm/h) E_TC	Effective Weight(kg) m_e			Recoil Force (N)		Weight (g)
				1	2	3	Ext.	Comp.	
KMS36-50(B)	50	220	162,000	35-121	110-543	440-4,888	24.4	44.6	994
-80(B)	80	340	232,800	55-188	170-839	680-7,555	25.4	45.6	1,280

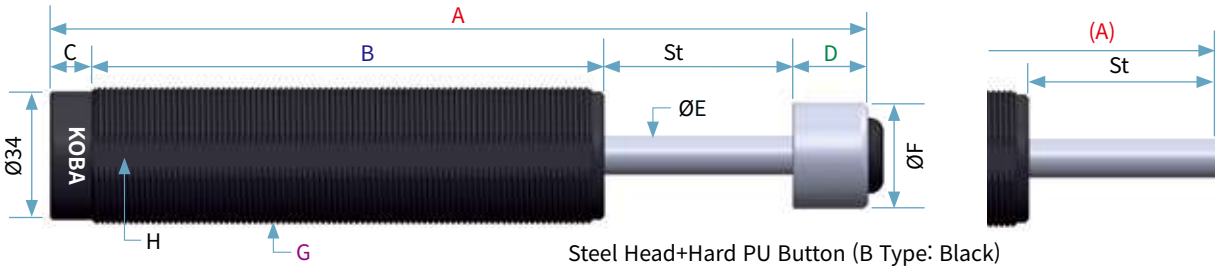

Steel Head+Hard PU Button (B Type: Black)

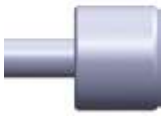

Steel Head(S Type)

Steel Head+Soft PU Button
(G Type : Green)

Dimensions (unit : mm)

Model	St	A(A)	B	C	D	ØE	ØF	G	H
KMS36-50(B)	50	221(197)	136	11	24	10	28	M36x1.5P	SW:34
-80(B)	80	352(328)	237	11	24	10	28	M36x1.5P	SW:34

KMS Accessories

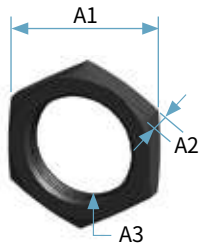

Lock Nut

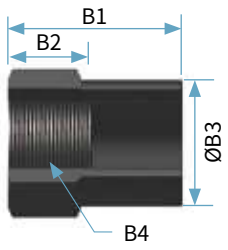

Stop Collar

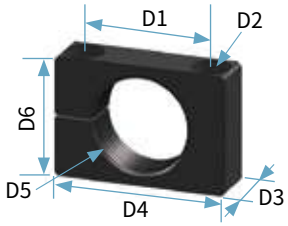

Clamp Mount

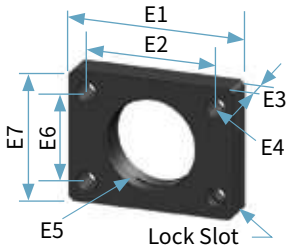

Rectangular Flange

(unit : mm)

Accessory / Model	Lock Nut			Stop Collar			
	A1	A2	A3	B1	B2	ØB3	B4
KMS 05-05	8	5	M5X0.5P	10	-	7	M5X0.5P
KMS 06-05	8	5	M6X0.5P	12	-	8	M6X0.5P
KMS 08-06	12	3	M8X1.0P	20	8	11.5	M8X1.0P
KMS 10-08	13	4	M10X1.0P	20	8	12.8	M10X1.0P
KMS 12-10	14	4	M12X1.0P	20	8	13.8	M12X1.0P
KMS 14-15	19	5	Thread	27	12	18	Thread
-20			M14X1.0P				M14X1.0P
KMS 20-20							
-30	24	6	M20X1.5P	36	15	24	M20X1.5P
-50							
KMS 25-25	32	8	Thread	42	18	31.5	Thread
-40							
-50	32	8	M20X2.0P	42	18	31.5	M20X2.0P
-80							
KMS 36-25							
-50	46	10	M36X1.5P	62	26	45	M36X1.5P
-80							

Accessory / Model	Clamp Mount						Rectangular Flange						
	D1	D2	D3	D4	D5	D6	E1	E2	E3	E4	E5	E6	E7
KMS 05-05	12	Bolt : M3	8	20	M5X0.5P	10	-	-	-	-	-	-	-
KMS 06-05					M6X0.5P								
KMS 08-06	16	Bolt : M4	10	25	M8X1.0P	14	-	-	-	-	-	-	-
KMS 10-08	16	Bolt : M4	10	25	M10X1.0P	14	-	-	-	-	-	-	-
KMS 12-10	20	Bolt : M5	12	32	M12X1.0P	16	-	-	-	-	-	-	-
KMS 14-15	20	Bolt : M5	12	32	Thread	20	-	-	-	-	-	-	-
-20					M14X1.0P								
KMS 20-20													
-30	28	Bolt : M6	20	40	M20X1.5P	25	-	-	-	-	-	-	-
-50													
KMS 25-25	32	Bolt : M6	25	46	Thread	32	-	-	-	-	-	-	-
-40													
-50	32	Bolt : M6	25	46	M25X2.0P	32	-	-	-	-	-	-	-
-80													
KMS 36-25													
-50	45	Bolt : M6	25	61	M36X1.5P	42	51	41	10	4-Ø7	M36X1.5P	29	45
-80													

KMS Accessories Installation

NAME	Accessories	Installation	Remark
Lock Nut			As a basic mounting way, by using Lock nut, shock absorber can be installed easily.
Stop Collar + Lock Nut			Stop Collar makes it easy to stop precisely and easy to select location to set and it prevents troubles so called bottom-out(piston shooting) problem in the position.
Side Load Adapter + Lock Nut			Main application is rotational motion control, and when the center distance of the shock absorber is inevitably short, it it can helps to prevents one sided wear trouble of Shock Absorber Piston Rod.
Flange Mount			By using Flange or Rectangular Flange, Shock Absorber can be fixed conveniently.
Clamp Mount			By Clamp Mount location adjustment and installation are easy. It is possible to mount it on single side or both sides of shock absorber.

KSA Series Adjustable Type

When the object collides, the shock absorber piston rod is pushed into the body, and the oil moves to the oil chamber through the groove formed along the outskirt of the inner tube. During this process, kinetic energy is transformed into heat energy and dissipates into the atmosphere, resulting in damping force. When the load is removed, the Piston Rod is returns to its original position by the compressed power of return spring. Middle pistion adjustment dial is one of the feature.

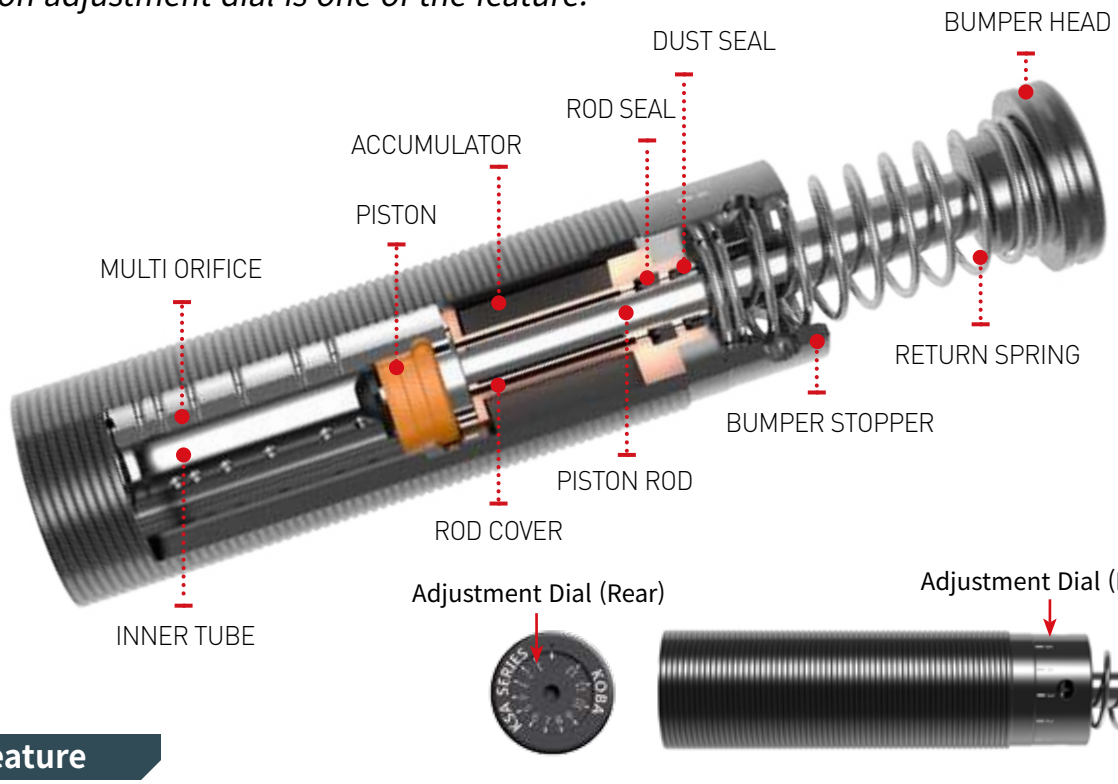

Feature

- Depending on the collision speed, you can fit the buffer dial from 0 to 300 degrees in 12 steps.
- Adjustment is easy in various installation environment by adopting front and rear adjustmenet dial.
- Shock Absorber Body is built as one body, not only robust but also fundamentally sovles the trouble so called bottom out problem.
- Because of full threaded body KMS Series is easy to be installed and precise location fixing is possible. And surface area is increased to dissipate thermal energy fast to atmosphere.
- Piston rod is made of anticorrosion material and rod cover is made of long lasting material with function of seal protection and that enable to guarantee long life.
- Body surface is electroless Ni plated or alloy plated, so that strong to corrosion.
- By using Urethane Cap, noise can be reduced.
- Velocity ranges : 0.3~5.0m/s
- Temperature ranges : -10~80°C
- Special specification custom made : Can be made to order according to characteristics such as thead, stainless, low temperature and high temperature.
  : Option -40~120°C(Special oil and seal)

Application

✓ Pick N place Robot, Packing Machine, Machine Tool, Automobile Assembly Line, Tire Manufacturing Line, Casting Plant, Crane, Safety devices and all other areas of multi purposes.

KSA Series Ordering Information

KSA 45 - 50 N - SC

- SC — Accessory Series
  - UC : Urethane Cap
  - RC : Rod Clevis
  - EC : End Clevis
  - LC : Lock Collar
  - SC : Stop Collar
  - SF : Square Flange
  - CM : Clamp Mount
  - RF : Rectangular Flange
- N — Surface standard black / N : Nickel plated
- 50 — Stroke
- 45 — Body Thread Size
- KSA — KS : Series / A : Adjustable

Accessory Series Charts

Accessories	Urethane Cap	Rod Clevis	End Clevis	Lock Collar	Stop Collar	Square Flange	Clamp Mount	Rectangular Flange
Symbols / Model	UC	RC	EC	LC	SC	SF	CM	RF
KSA 45-25								
-50	●	●	●	●	●	●	●	●
-75								
KSA 64-25								
-50								
-75	●	●	●	●	●	●	●	●
-100								
-125								
-150								
KSA 85-25								
-50								
-75	●	●	●	●	●	●	●	
-100								
-125								
-150								

KSA45 Series

Engineering Data

Model	Stroke (mm) St	Max.Energy /Cycle (Nm) E_T	Max.Energy /Hour (Nm/h) E_TC	Effective Weight (kg) m_e	Recoil Force (N)		Weight (g)
					Ext.	Comp.	
KSA45-25	25	650	195,000	50 - 13,354	49.7	82.8	1.13
-50	50	1,300	260,000	99 - 26,700	45.6	84	1.3
-75	75	2,000	300,000	148 - 39,060	44.3	86.3	1.52

※ **Lwrench 6mm**

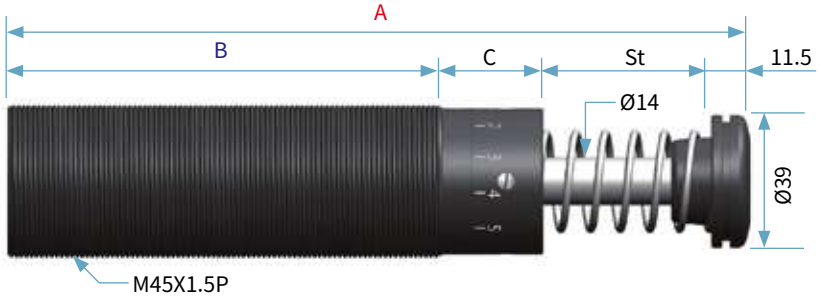

Dimensions (unit : mm)

Model	St	A	B	C
KSA45-25	25	159.5	93	30
-50	50	220.5	129	30
-75	75	292.5	168.5	37.5

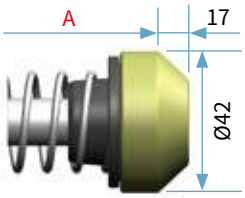

Urethane Cap

Accessory (unit : mm)

Clevis Mount

End Clevis

Rod Clevis

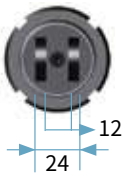

Clamp Mount

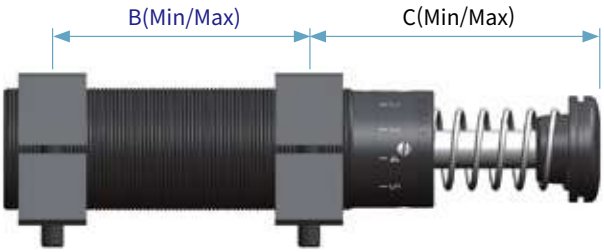

Dimensions (unit : mm)

Model	KSA45-25	KSA45-50	KSA45-75
A	210	271	343
B(Min/Max)	25/68	25/104	25/143.5
C(Min/Max)	79.5/100.5	104/143.5	129/170.7

KSA64 Series

Engineering Data

Model	Stroke (mm) St	Max.Energy /Cycle (Nm) E_T	Max.Energy /Hour (Nm/h) E_TC	Effective Weight (kg) m_e	Recoil Force (N)		Weight (g)
					Ext.	Comp.	
KSA64-25	25	1,250	152,000	92 - 24,400	61.8	110	2.9
-50	50	2,500	248,000	185 - 48,800	60.8	133.2	3.3
-75	75	3,750	265,000	277 - 73,240	61.4	148.3	3.8
-100	100	5,000	360,000	370 - 97,650	59.4	160.1	4
-125	125	6,250	413,000	462 - 122,000	57.1	160.4	7.7
-150	150	7,500	450,000	555 - 146,480	51	166.8	8.9

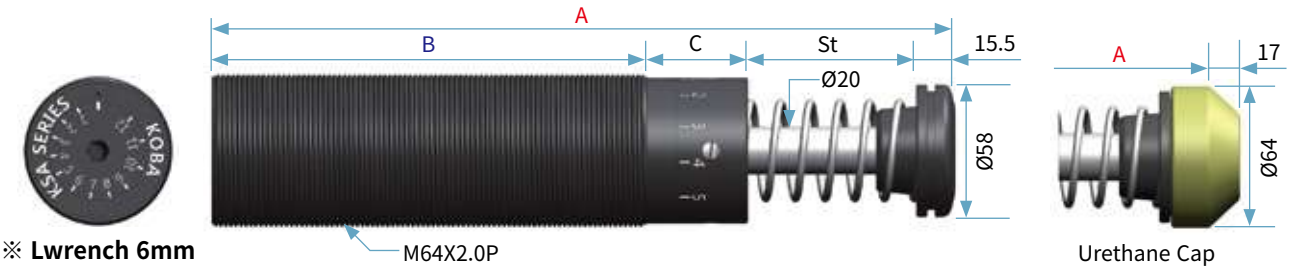

※ **Lwrench 6mm**

Dimensions (unit : mm)

Model	St	A	B	C
KSA64-25	25	176	97.5	38
-50	50	239	135.5	38
-75	75	309	173.5	45

Model	St	A	B	C
KSA64-100	100	375	214.5	45
-125	125	452	256.5	55
-150	150	518.5	294.5	58.5

Accessory (unit : mm)

Clevis Mount

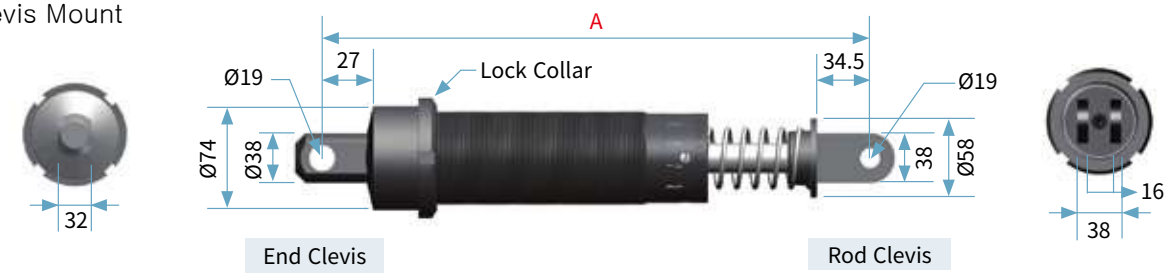

Clamp Mount

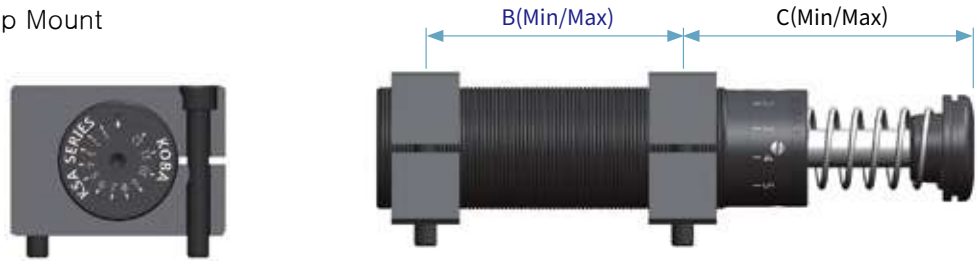

Dimensions (unit : mm)

Model	KSA64-25	KSA64-50	KSA64-75	KSA64-100	KSA64-125	KSA64-150
A	244	307	377	442	520	-
B(Min/Max)	25/72.5	25/110.5	25/148.5	25/189.5	25/231.5	25/269.5
C(Min/Max)	92.5/116.25	117.5/160.25	149.5/211.25	174.5/256.75	209.5/312.75	238/360.25

KSA85 Series

Engineering Data

Model	Stroke (mm) St	Max.Energy /Cycle (Nm) E_T	Max.Energy /Hour (Nm/h) E_TC	Effective Weight (kg) m_e	Recoil Force (N)		Weight (g)
					Ext.	Comp.	
KSA85-25	25	2,000	330,000	148 - 39,600	132	245.8	12.2
-50	50	4,000	462,000	296 - 78,100	131.6	271.7	14.4
-75	75	6,000	680,000	444 - 117,200	130	325.1	17
-100	100	8,000	825,000	591 - 156,300	125.4	327.7	20
-125	125	10,000	859,000	740 - 195,300	126.6	343.3	23.6
-150	150	12,000	901,000	930 - 220,300	126.6	386.7	28

※ **Lwrench 8mm**

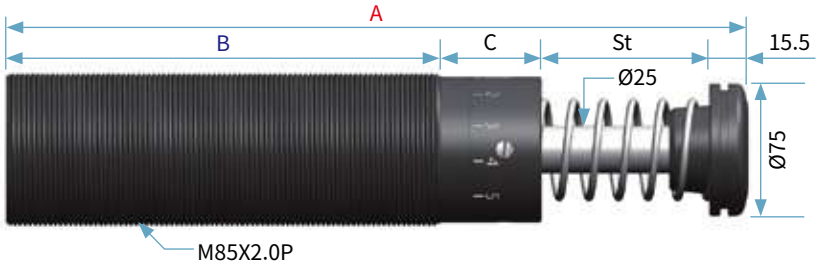

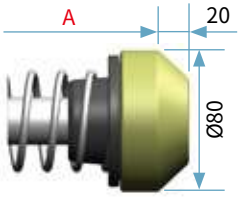

Urethane Cap

Dimensions (unit : mm)

Model	St	A	B	C
KSA85-25	25	189.5	109	40
-50	50	251	145.5	40
-75	75	314.5	180	44

Model	St	A	B	C
KSA85-100	100	384.5	217	52
-125	125	452.5	256	56
-150	150	513.5	292	56

Accessory (unit : mm)

Clevis Mount

End Clevis

Rod Clevis

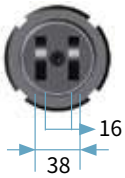

Clamp Mount

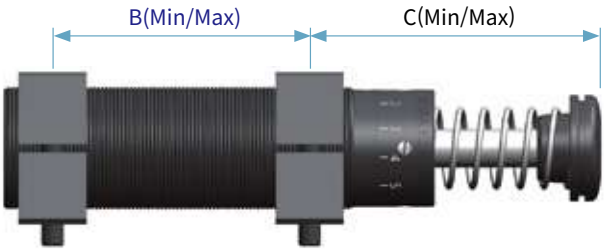

Dimensions (unit : mm)

Model	KSA85-25	KSA85-50	KSA85-75	KSA85-100	KSA85-125	KSA85-150
A	256	316	381	451	519	-
B(Min/Max)	25/79	25/114	25/150	25/187	25/226	25/262
C(Min/Max)	95.5/120	120.5/162.5	149/209.5	182.5/261	211.5/309.5	236.5/352.5

KSA Accessories

Lock Collar

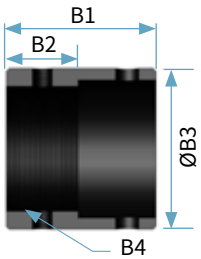

Stop Collar

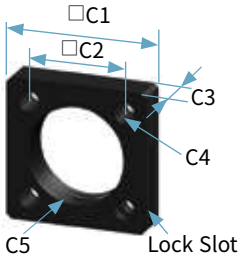

Square Flange

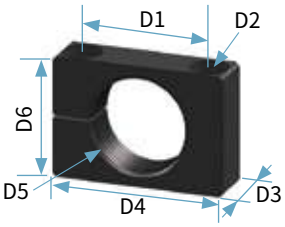

Clamp Mount

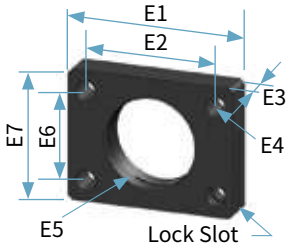

Rectangular Flange

(unit : mm)

Accessory / Model	Lock Collar			Stop Collar				Square Flange				
	ØA1	A2	A3	B1	B2	ØB3	B4	□C1	□C2	C3	C4	C5
KSA 45-25	58	9	M45X1.5P	52	25	56	M45X1.5P	60	41	14	4-Ø9	M45X1.5P
-50												
-75												
KSA 64-25	80	11	M64X2.0P	85	45	75	M64X2.0P	90	70	16	4-Ø11	M64X2.0P
-50												
-75												
-100												
-125												
-150												
KSA 85-25	110	16	M85X2.0P	95	45	98	M85X2.0P	104	86	19	4-Ø13	M85X2.0P
-50												
-75												
-100												
-125												
-150												

Accessory / Model	Clamp Mount						Rectangular Flange						
	D1	D2	D3	D4	D5	D6	E1	E2	E3	E4	E5	E6	E7
KSA 45-25	60	Bolt : M8X65L	25	80	M45X1.5P	56	76	60	14	4-Ø9	M45X1.5P	41	60
-50													
-75													
KSA 64-25	78	Bolt : M10X85L	25	100	M64X2.0P	80	115	87.6	16	4-Ø11	M64X2.0P	70	90
-50													
-75													
-100													
-125													
-150													
KSA 85-25	115	Bolt : M14X110L	30	145	M85X2.0P	100	-	-	-	-	-	-	-
-50													
-75													
-100													
-125													
-150													

KSA Accessories Installation

NAME	Accessories	Installation	Remark
Lock Collar			As a basic mounting way, by using Lock nut, shock absorber can be installed easily.
Stop Collar + Lock Collar			Stop Collar makes it easy to stop precisely and easy to select location to set and it prevents troubles so called bottom-out(piston shooting) problem in the position.
Flange Mount			By using Flange or Rectangular Flange, Shock Absorber can be fixed conveniently.
Clamp Mount			It can helps to use on long shock absorber body settlement.
Clevis Mount			Main application is for cycle movement and it can help to decelerate indirectly and it can prevent damage from side load.

KHA Series Adjustable Type

When the object collides, the piston rod is pushed into the body, and oil is stored as an accumulator as mush as the volume of the piston rod that came into the body through the inner tube and the outer tube's orifice. During this process, kinetic energy is transformed into heat energy and dissipates into the atmosphere, resulting in damping force. When the load is removed, the piston rod is returned to its original position by the force of the compressed return spring.

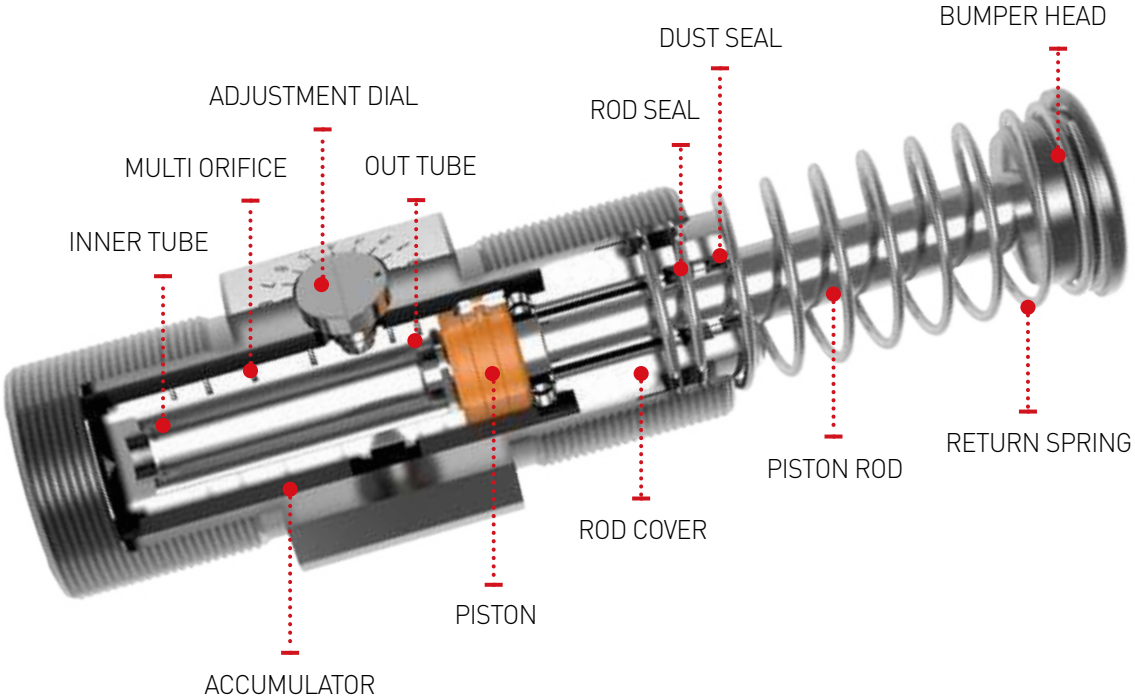

Feature

- The Adjustment Dial is rotated from 0 to 180 degrees from left to right to freely adjust the buffering range according to the impace speed.
- The body is threaded to increase the surface area, and it disciss thermal energy which was transformed by impact energy faster, and it can adjust the position when mounting, which makes it easy to fix the position accurately.
- Piston Rod is made of anticorrosion material and Rod Cover is made of long lasting material with function of seal protection and that enable to guarantee long life.
- Shock Absorber Bumper Head Urethane Cap for low impact noise.
- Body surface is Electroless Ni plated or Alloy plated, so that strong to corrosion.
- Velocity ranges : 0.3~3.5m/s, Low Velocity(LV) 0.08~1.3m/s
- Temperature ranges : -10~80°C
- Special specification custom made : Can be made to order according to characteristics such as thead, stainless, low temperature and high temperature.
  : Option -40~120°C(Special oil and seal)

Application

✓ Pick N place Robot, Packing Machine, Machine Tool, Automobile Assembly Line, Tire Manufacturing Line, Casting Plant, Crane, Safety devices and all other areas of multi purposes.

KHA Series Ordering Information

KHA 42 - 50 N LV - SC

- **SC** — Accessory Series
  - UC : Urethane Cap
  - RC : Rod Clevis
  - EC : End Clevis
  - LC : Lock Collar
  - SC : Stop Collar
  - SF : Square Flange
  - CM : Clamp Mount
  - RF : Rectangular Flange
- **LV** — No Symbol Low Velocity
- **N** — Surface standard black; N : Nickel plated
- **50** — Stroke
- **42** — Body Thread Size
- **KHA** — KH : Series; A : Adjustable

Accessory Series Charts

Accessories	Urethane Cap	Rod Clevis	End Clevis	Lock Collar	Stop Collar	Square Flange	Clamp Mount	Rectangular Flange
Symbols / Model	UC	RC	EC	LC	SC	SF	CM	RF
KHA 42-25								
-50	●	●	●	●	●	●	●	●
-75								
KHA 64-50								
-100	●	●	●	●	●	●	●	●
-150								
KHA 85-50								
-90	●	●	●	●	●	●	●	
-125								
-165								
KHA 115-50								
-100								
-150	●	●	●	●	●	●	●	
-200								
-250								

KHA42 Series

Engineering Data

Model	Stroke (mm) St	Max.Energy /Cycle (Nm) E_T	Max.Energy /Hour (Nm/h) E_TC	Effective Weight (kg) m_e	Recoil Force (N)		Weight (g)
					Ext.	Comp.	
KHA42-25	25	250	125,000	36 - 3,600	28	56	1.25
-25LV				295 - 52,000			
-50	50	500	166,000	45 - 6,150	38	86	1.4
-50LV				591 - 104,000			
-75	75	750	200,000	54 - 9,500	32	88	1.6
-75LV				887 - 156,000			

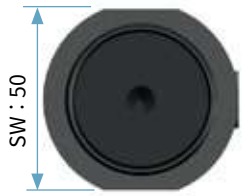

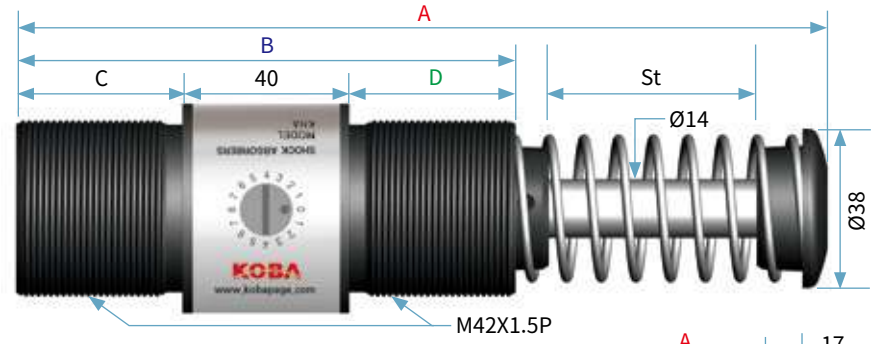

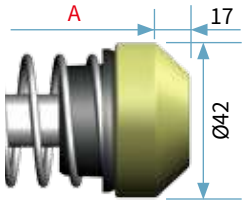

Urethane Cap

Dimensions (unit : mm)

Model	St	A	B	C	D
KHA42-25	25	145	95	28	27
-50	50	195	120	40	40
-75	75	245	145	52	53

Accessory (unit : mm)

Clevis Mount

Clamp Mount

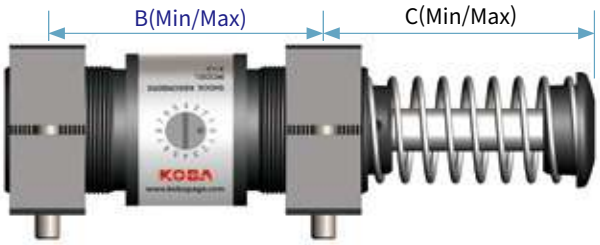

Dimensions (unit : mm)

Model	KHA42-25	KHA42-50	KHA42-75
A	200	250	300
B(Min/Max)	65/70	65/95	65/120
C(Min/Max)	62.5/64.5	87.5/102.5	117.6/145.5

KHA64 Series

Engineering Data

Model	Stroke (mm) St	Max.Energy /Cycle (Nm) E_T	Max.Energy /Hour (Nm/h) E_TC	Effective Weight (kg) m_e	Recoil Force (N)		Weight (g)
					Ext.	Comp.	
KHA64-50	50	1,300	270,000	82 - 12,600	65	148	3.7
-50LV				4,062.5 - 277,500			
-100	100	2,600	360,000	115 - 17,000	45	157	4.5
-100LV				8,125 - 555,000			
-150	150	3,900	420,000	140 - 22,000	47	199	5.3
-150LV				12,187.5 - 832,500			

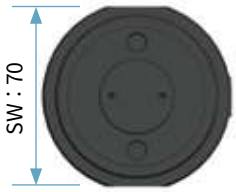

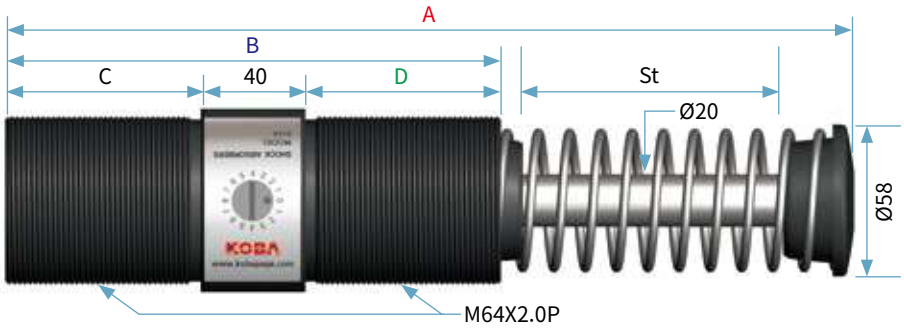

Dimensions (unit : mm)

Model	St	A	B	C	D
KHA64-50	50	225	140	50	50
-100	100	327	190	75	75
-150	150	455	240	100	100

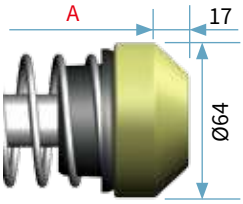

Urethane Cap

Accessory (unit : mm)

Clevis Mount

Clamp Mount

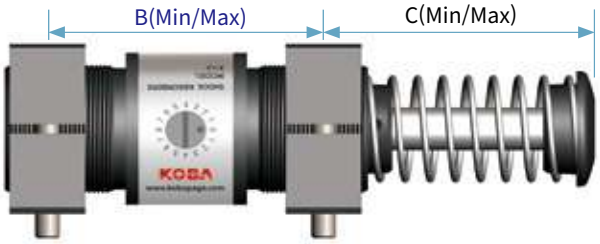

Dimensions (unit : mm)

Model	KHA64-50	KHA64-100	KHA64-150
A	305	409	534
B(Min/Max)	65/115	65/165	65/215
C(Min/Max)	97.5/122.5	147.5/197.5	197.5/272.5

KHA85 Series

Engineering Data

Model	Stroke (mm) St	Max.Energy /Cycle (Nm) E_T	Max.Energy /Hour (Nm/h) E_TC	Effective Weight (kg) m_e	Recoil Force (N)		Weight (g)
					Ext.	Comp.	
KHA85-50	50	2,300	370,000	200 - 37,000	148	315	6.4
-90	90	4,000	650,000	230 - 40,000	121	365	7.6
-125	125	5,700	930,000	300 - 43,000	114	365	8.6
-165	165	7,300	1,210,000	360 - 45,000	98	429	9.8

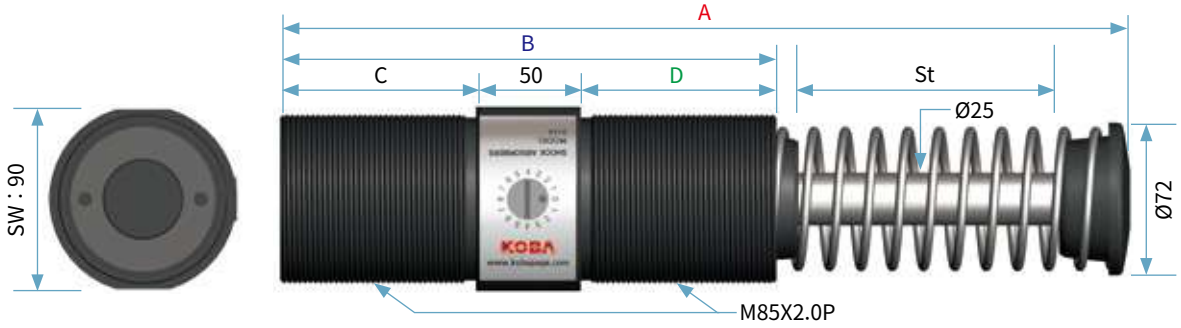

Dimensions (unit : mm)

Model	St	A	B	C	D
KHA85-50	50	245	140	42	48
-90	90	325	180	60	70
-125	125	400	216	82	84
-165	165	494	256	106	100

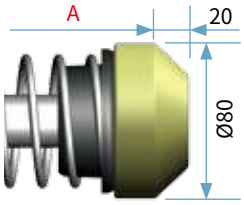

Urethane Cap

Accessory (unit : mm)

Clevis Mount

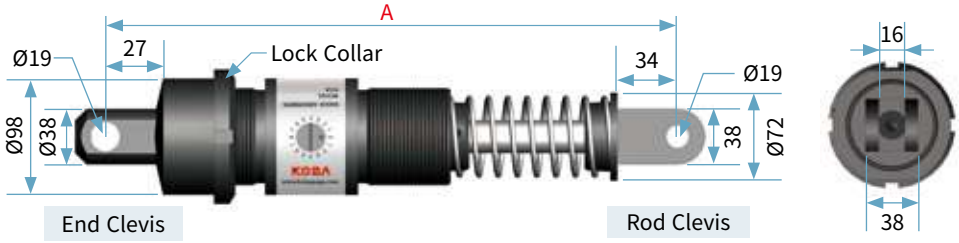

Clamp Mount

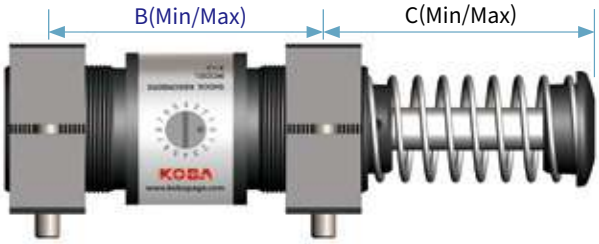

Dimensions (unit : mm)

Model	KHA85-50	KHA85-90	KHA85-125	KHA85-165
A	325	405	480	575
B(Min/Max)	80/110	80/150	80/186	80/226
C(Min/Max)	120/138	160/200	195/249	220/290

KHA115 Series

Engineering Data

Model	Stroke (mm) St	Max.Energy /Cycle (Nm) E_T	Max.Energy /Hour (Nm/h) E_TC	Effective Weight (kg) m_e	Recoil Force (N)		Weight (g)
					Ext.	Comp.	
KHA115-50	50	3,700	1,501,000	370 - 44,000	187	427	16
-100	100	7,400	1,805,000	370 - 57,000	178	482	19
-150	150	11,100	2,100,000	370 - 89,000	185	538	21
-200	200	14,800	2,405,000	390 - 118,000	185	665	31
-250	250	18,500	2,710,000	440 - 145,000	184	649	34

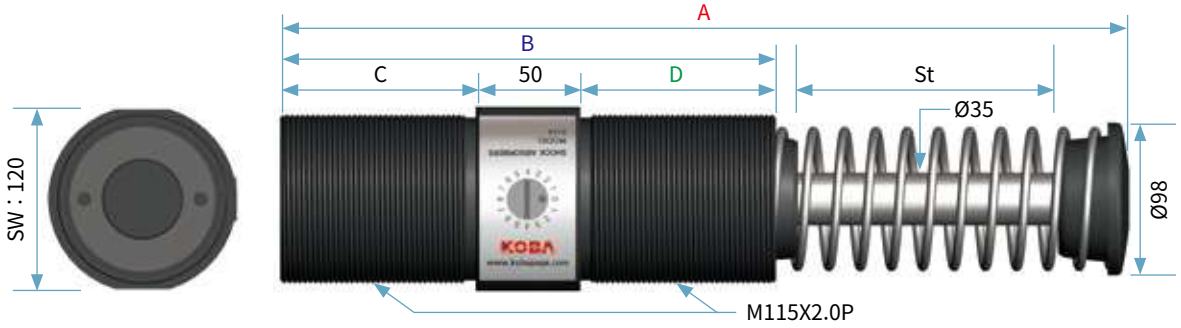

Dimensions (unit : mm)

Model	St	A	B	C	D
KHA115-50	50	314	200	75	75
-100	100	414	250	100	100
-150	150	514	300	125	125
-200	200	644	350	150	150
-250	250	744	400	180	170

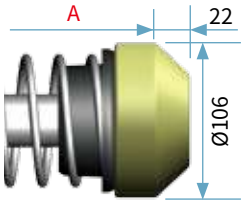

Urethane Cap

Accessory (unit : mm)

Clevis Mount

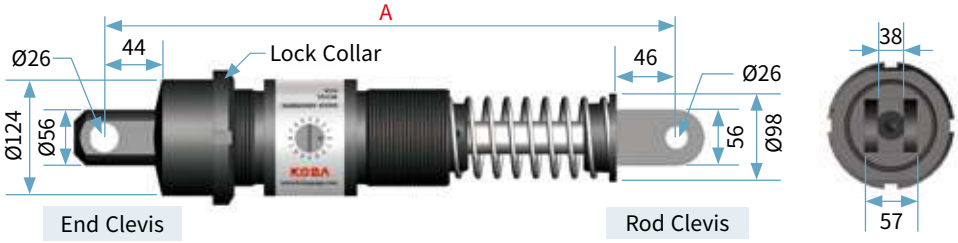

Clamp Mount

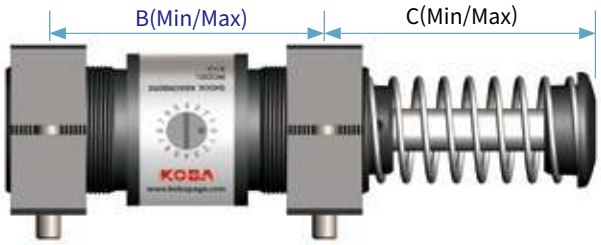

Dimensions (unit : mm)

Model	KHA115-50	KHA115-100	KHA115-150	KHA115-200	KHA115-250
A	430	535	635	760	865
B(Min/Max)	80/170	80/220	80/270	80/320	80/370
C(Min/Max)	129/174	179/249	229/324	279/399	329/479

KHA Accessories

Lock Collar

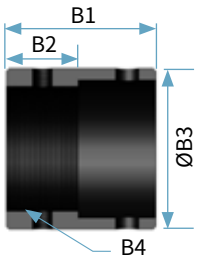

Stop Collar

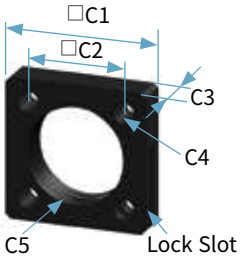

Square Flange

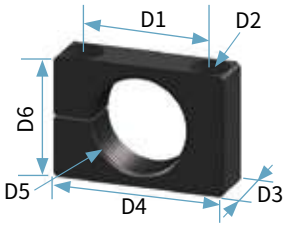

Clamp Mount

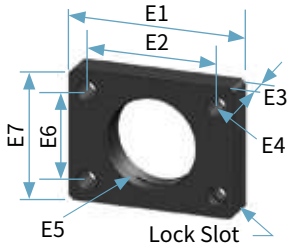

Rectangular Flange

(unit : mm)

Accessory / Model	Lock Collar			Stop Collar				Square Flange				
	ØA1	A2	A3	B1	B2	ØB3	B4	□C1	□C2	C3	C4	C5
KHA 42-25	58	9	M42X1.5P	52	25	56	M42X1.5P	60	41	16	4-Ø9	M42X1.5P
-50												
-75												
KHA 64-50	80	11	M64X2.0P	85	45	75	M64X2.0P	90	70	16	4-Ø11	M64X2.0P
-100												
-150												
KHA 85-50	110	16	M85X2.0P	95	45	98	M85X2.0P	104	76	19	4-Ø13	M85X2.0P
-90												
-125												
-165												
KHA 115-50	150	19	M115X2.0P	130	70	138	M115X2.0P	140	111	25	4-Ø18	M115X2.0P
-100												
-150												
-200												
-250												

Accessory / Model	Clamp Mount						Rectangular Flange						
	D1	D2	D3	D4	D5	D6	E1	E2	E3	E4	E5	E6	E7
KHA 42-25	60	Bolt : M8X65L	25	80	M42X1.5P	56	76	60	14	4-Ø9	M42X1.5P	41	60
-50													
-75													
KHA 64-50	78	Bolt : M10X85L	25	100	M64X2.0P	80	115	87.6	16	4-Ø11	M64X2.0P	70	90
-100													
-150													
KHA 85-50	115	Bolt : M14X110L	30	145	M85X2.0P	100	-	-	-	-	-	-	-
-90													
-125													
-165													
KHA 115-50	150	Bolt : M16X150L	35	185	M115X2.0P	135	-	-	-	-	-	-	-
-100													
-150													
-200													
-250													

KHA Accessories Installation

NAME	Installation	Remark
Lock Collar		Installation is simply done by fastening Lock Collar. This is basic installation.
Stop Collar + Lock Collar		Stop Collar guarantees accurate stopping and positioning and protects piston shooting problem (so called "Bottom-out" problem) of Piston.
Flange Mount		Use to Square Flange or Rectangular Flange to conveniently fix Shock Absorber.
Clamp Mount		Clamp mount is used in horizontal installation usually specially if the shock absorber is long.
Clevis Mount		Clevis mount is used in rotation movement to absorb the collision force indirectly and protect from unbalanced shock absorption.

Air Oil Tank & Check Valve Series

It is used by connecting pipes to Shock Absorber main body and Air Oil Tank, and suppling air to the inside of Air Oil Tank. By using Air Oil Tank, the accumulated heat generated inside the shock absorber is released more effectively, thus increasing the mumber of cycles per hour, extending the life of the shock absorber, No Return Spring is required and it is able to control Shock Absorber return time & speed.

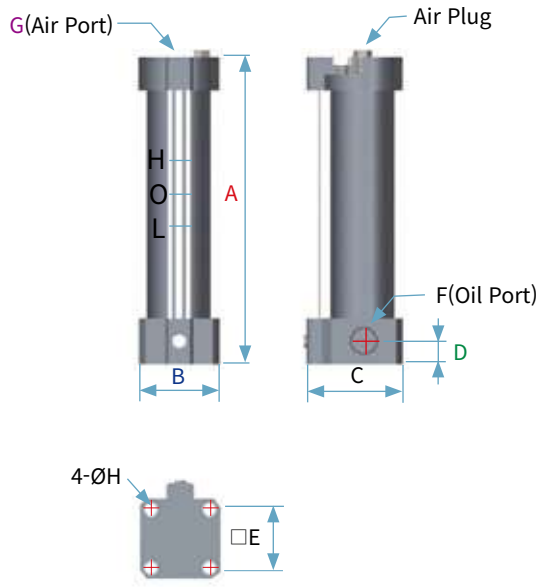

Feature

- Working pressure
  : 3~7bar (guarantee pressure 10bar)
- Temperature ranges : -10~80°C
- How to use
  : It is necessary to refill oil between 0~L

✓ Notes

1. Air Oil Tank should be installed above the shock absorber.
2. The air inside the unit must be removed before operation.
3. When checking the Air Oil Tank, check pressure inside the check valve you must work after removing pressure.

Dimensions (unit : mm)

MODEL	A	B	C	D	□E	F	G	4-ØH	Application MODEL
KHO63-100	286	88	105	25	64	PT3/4	PT3/8	15	KHA42, KHA64 Series
KHO100-150	398	135	153	30	93	PT3/4	PT3/8	15	KHA85, KHA115 Series

Check Valve

Check valve has the function of controlling the directions of hydraulic flow in Shock Absorber and Air Oil Tank.

MODEL	A	B	C
KC 1/4	35	24	PT 1/4
KC 3/8	35	24	PT 3/8
KC 1/2	40	40	PT 1/2
KC 3/4	60	48	PT 3/4

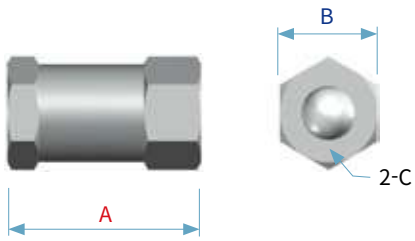

Application

Circuit

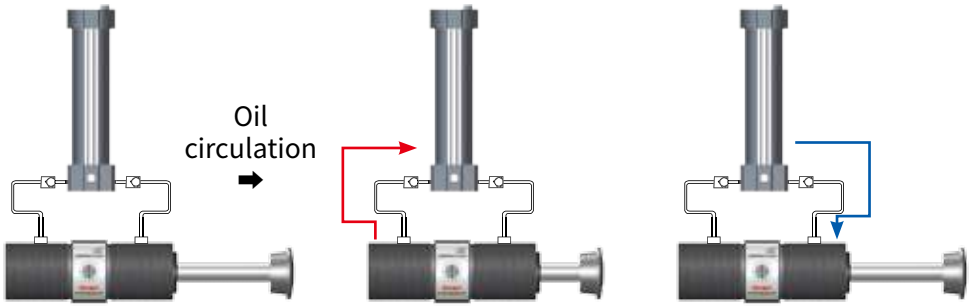

The best circuit to dissipate impact energy and it can increase cycles per hour.

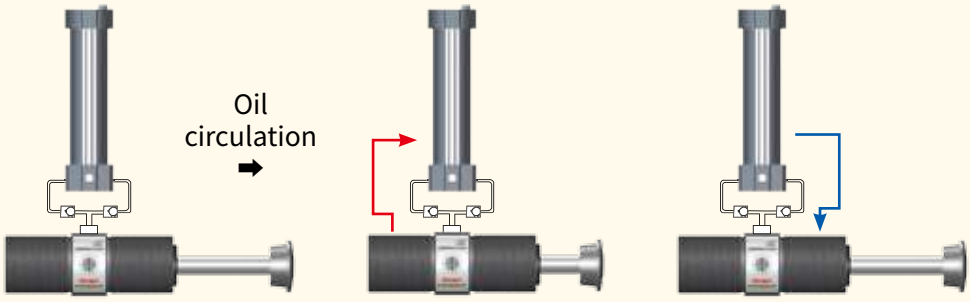

When it using cooling circuit, high tempered oil transfers to tank and cool down oil supplied from shock absorber internal route and it can increase cycles per hour. For high speed application.

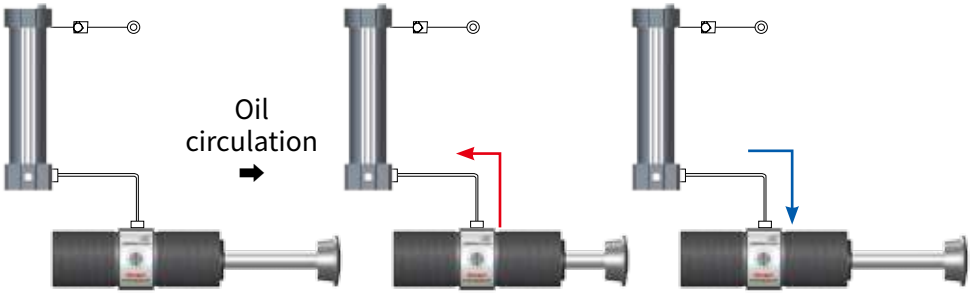

Piston rod returned to its original position after operation cycle.

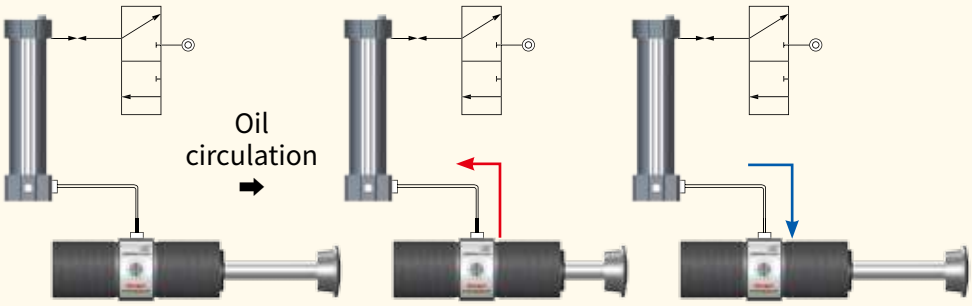

Return control is possible when air valve is applied to shock absorber.

MAERSK LINE

KOBA
BEST SHOCK ABSORBER

Hydraulic Buffer

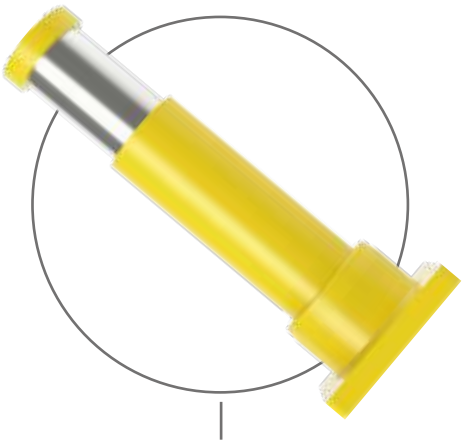

KHG Series

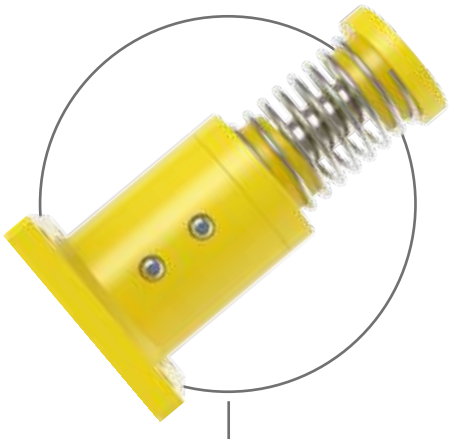

KHS Series

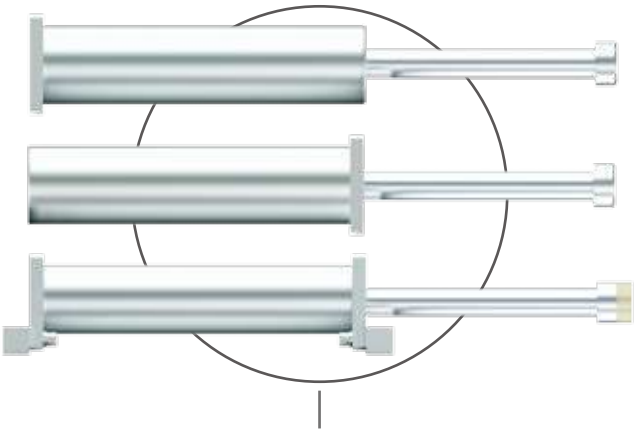

KCSC Series

KHG Series Hydraulic Buffer

When the moving object collides with the bumper head, the internal check valve is closed and the oil chamber is compressed. The compressed oil flows into the orifice bar through the multiple orifice hole and it absorbs the shock. In addition, as the piston rod enters the inside of oil chamber, the oil amount as much as the piston rod volume presses the chamber piston to compress thd gas chamber(performs the accumlator fumction), so that the pressure inside the gas chamber is increased, absorbs shock energy over the entire stroke ranges. When the shock absorption is completed, the compressed gas chamber is forced to the oil chamber area, and the check valve installed in the piston is opened to return the piston rod to its original position.

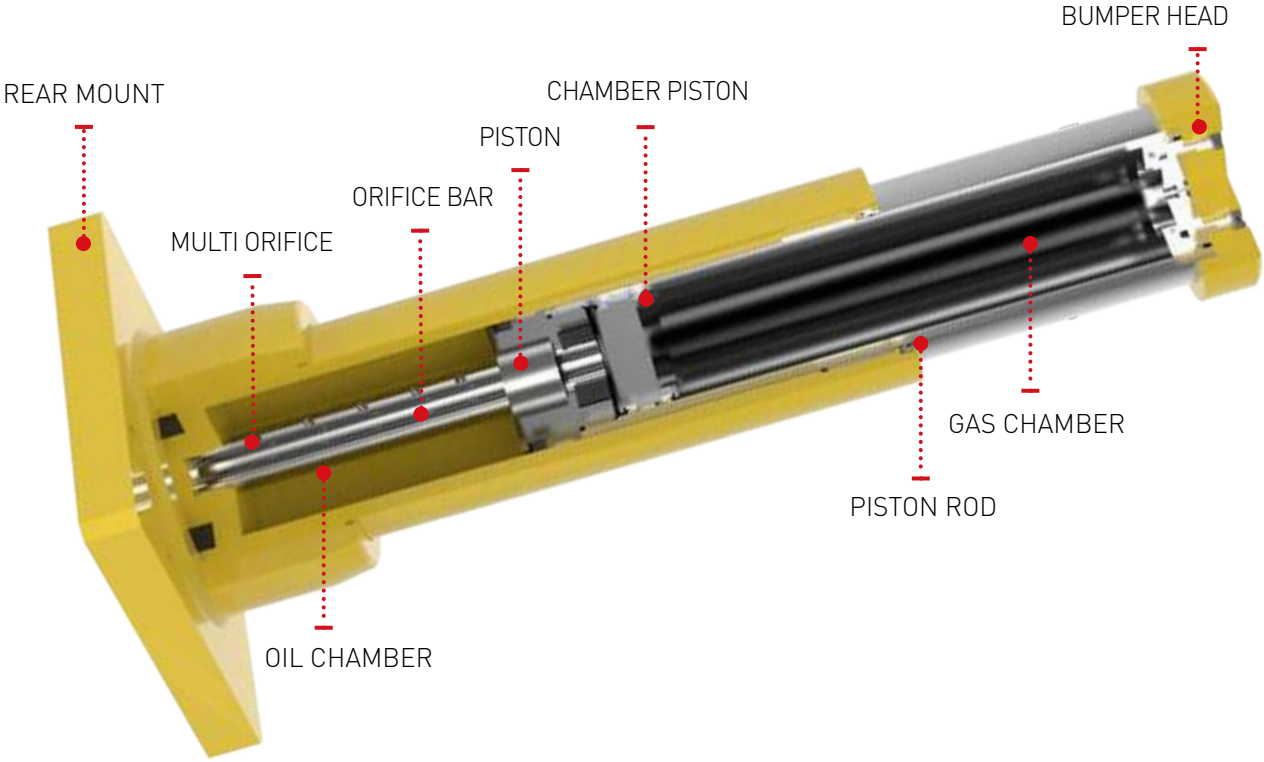

Feature

- KHG buffer safely protect heavy machinery and equipment during transfer of heavy loads. The high-capcity buffer are individually designed to decelerate moving loads under various conditions in compliance with industry mandatory international standards such as OSHA, CMAA, AIST, DIN, FEM etc.
- Adjustment type : Self adjustment type
- Applied fluid : Oil + Nitrogen Gas
- Temperature ranges : Standard (-10~80°C), Special (-30~100°C)
- Return mediator : Nitrogen Gas
- Piston Rod : Hard Chrome (25㎛ or more)
- Body and Mount : Epoxy Paint Coatings

Application

✓ Container crane, Overhead crane, Stacker crane, Transfer car, Amusement park, Railway, Steel mill and all other areas of multi purposes.

Energy absorption rate comparison

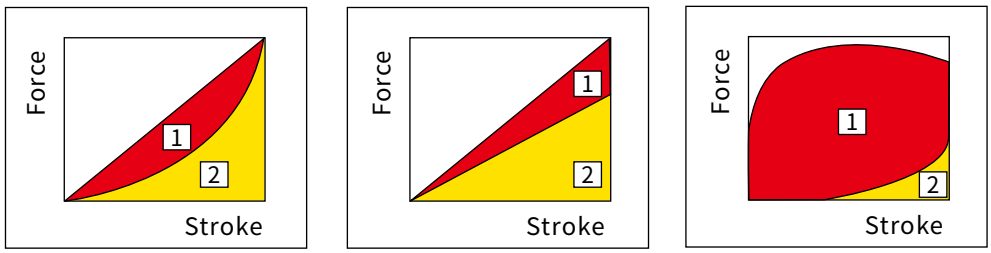

Absorption energy
Stored energy

Rubber Damping
1. Low damping
2. High spring

Spring Damping
1. Low damping
2. High spring

Hydraulic Buffer
1. Maximum damping
2. Low gas spring

KHG Series Ordering Information

KHG 120 - 200 - RS - B C

- Accessory Series
  - C : Safety Cable
  - B : Bellows
  - UC : Urethane Cap
- Mount Type
  - RS : Rear Flange Mount
  - FS : Front Flange Mount
  - SS : Front and Rear Flange Mount
  - ※ RC : Rod Clevis
  - EC : End Clevis
- Stroke
- Body Dia
- KHG : Gas Return 방식

Accessory

Bellows Cover

Clevis Mounting

Front & Rear Safety Cable

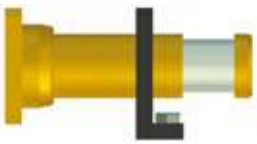

Rear Mount + Front Foot Mount

Special Order

- Temperature : -30~100°C
- Special Coatings
- Body Chrome Plating
- Stainless Steel
- Special Head

Model selection calculation formula

Symbol descripition

기호	단 위	설 명
E_K	kJ	Kinetic Energy
E_W	kJ	Work Energy
E_T	kJ	Total Energy
E_TC	kJ/h	Total Energy Absorbed Per Hour
F_S	kN	Maximum Buffer Force
V	m/s	Impact Velocity
VE	m/s	Effective Velocity
S	m	Buffer Stroke
S_D	m/s^2	Deceleration
C	Cycle/h	Cycle Per Hour
H	m	Drop Height
p	bar	Operation Pressure
P	kW	Motor Power
g	$m/s^2(9.8m/s^2)$	Accelleration
η	-	Min. Efficiency

1kgf = 9.81N , 1Nm = 1J , 1MPa = 10bar = 10.2kg/cm^2 , 1g = 9.8m/s^2

Main formula (See page 11)

$$E_K = \frac{m \cdot V^2}{2} \quad E_TC = E_T \cdot C \quad E_T = E_K + E_W \quad E_W = F \times S \quad F_M = \frac{E_K}{S \cdot 0.8} \quad S_D = \frac{V_E^2}{2 \cdot S \cdot 0.8} \quad S \geq \frac{V^2}{2 \cdot S_D \cdot 0.8}$$

Model selection method

Moving Weight	Example	Buffer Model	
a) V=0.6m/s m=80ton	$E_K=\frac{m\cdot V^2}{2}=\frac{80\times0.6^2}{2}=14.4kJ$ $E_T=E_K$ $F_S=\frac{E_T}{S\cdot0.8}=\frac{14.4}{0.15\times0.8}=120kN$ $V_E=0$ $S_D=\frac{V^2}{2\cdot S\cdot0.8}=\frac{0.6^2}{2\times0.15\times0.8}=1.5m/s^2$ $S=\frac{V^2}{2\cdot S_D\cdot0.8}=\frac{0.6^2}{2\times1.5\times0.8}=0.15m=150mm$	pre-selected	KHG85-150 Stroke : 150
		final selection	KHG85-150
b) V =1.2m/s m=200ton P =20kW 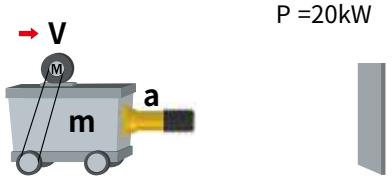	$E_K=\frac{m\cdot V^2}{2}=\frac{200\times1.2^2}{2}=144kJ$ $F=\frac{2.5\cdot P}{V}=\frac{2.5\times20}{1.2}=41.7kN$ $E_W=F\cdot S=41.7\times0.3=12.5kJ$ $E_T=E_K+E_W=144+12.5=156.5kJ$ $F_S=\frac{E_T}{S\cdot0.8}=\frac{156.5}{0.3\times0.8}=652kN$	pre-selected	KHG140-300 Stroke : 300
		final selection	KHG140-300
c) V =1.8m/s m=150ton	$E_K=\frac{0.5\cdot m\cdot V^2}{2}=\frac{0.5\times150\times1.8^2}{2}=121.5kJ$ $E_T=E_K$ $F_S=\frac{E_T}{S\cdot0.8}=\frac{121.5}{0.4\times0.8}=379.69\,kN$ $V_E=\frac{V}{2}=\frac{1.8}{2}=0.9m/s$ $S_D=\frac{V_E^2}{2\cdot S\cdot0.8}=\frac{0.9^2}{2\times0.4\times0.8}=1.27m/s^2$	pre-selected	KHG130-400 Stroke : 400
		final selection	KHG130-400
d) V_1=1.0m/s m_1=180ton V_2=0.6m/s m_2=250ton	$E_K=\frac{m_1\cdot m_2(V_1+V_2^2)}{2(W_1+W_2)}=\frac{180\times250(0.1+0.6)^2}{2(180+250)}=133.95kJ$ $E_T=E_K$ $F_S=\frac{E_T}{S\cdot0.8}=\frac{133.95}{0.5\times0.8}=334.88\,kN$ $V_E=V_1+V_2=1.0+0.6=1.6m/s$ $S_D=\frac{V_E^2}{2\cdot S\cdot0.8}=\frac{1.6^2}{2\times0.5\times0.8}=3.2\,m/s^2$	pre-selected	KHG120-500 Stroke : 500
		final selection	KHG120-500
e) V_1=1m/s m_1=220 ton V_2=0.7m/s m_2=260ton 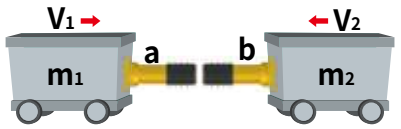	$E_K=\frac{m_1\cdot m_2(V_1+V_2)^2}{4(W_1+W_2)}=\frac{220\times260(1+0.7)^2}{4(220+260)}=86kJ$ $E_T=E_K$ $F_S=\frac{E_T}{S\cdot0.8}=\frac{86}{0.25\times0.8}=430.49\,kN$ $V_E=\frac{V_1+V_2}{2}=\frac{1+0.7}{2}=0.85m/s$ $S_D=\frac{V_E^2}{2\cdot S\cdot0.8}=\frac{0.85^2}{2\times0.25\times0.8}=1.806\,m/s^2$	pre-selected	KHG120-250 Stroke : 250
		final selection	KHG120-250
f) m=2.5ton H =0.4m 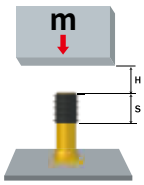	$E_K=g\cdot m\cdot H=9.81\times2.5\times0.4=9.81kJ$ $E_W=m\cdot g\cdot S=2.5\times9.81\times0.15=3.67kJ$ $E_T=E_K+E_W=9.81+3.67=13.48kJ$ $V=\sqrt{2\cdot g\cdot H}=\sqrt{2\times9.81\times0.4}=2.8m/s$ $F_S=\frac{E_T}{S\cdot0.8}=\frac{13.48}{0.15\times0.8}=112.33kN$	pre-selected	KHG85-150 Stroke : 150
		final selection	KHG85-150

KHG65 Series

Engineering Data

Model	Stroke (mm) St	Max.Energy / Cycle(kJ) E_T	Max Buffer Force(kN) F_S	Recoil Force(kN)		Max Side Load Angle(°)		Weight (kg)
				Ext	Comp	R Type	F Type	
KHG65-25	25	2	100		3.2	3.5	3.5	6
-50	50	4	100		4.7	3.5	3.5	7
-75	75	6	100		5.3	3	3	8
-100	100	8	100	1.0	6.6	3	3	9
-125	125	10	100		6.6	2.5	2.5	9
-150	150	12	100		6.6	2	2	10
-200	200	16	100		9.0	2	2	11

Rear Mount

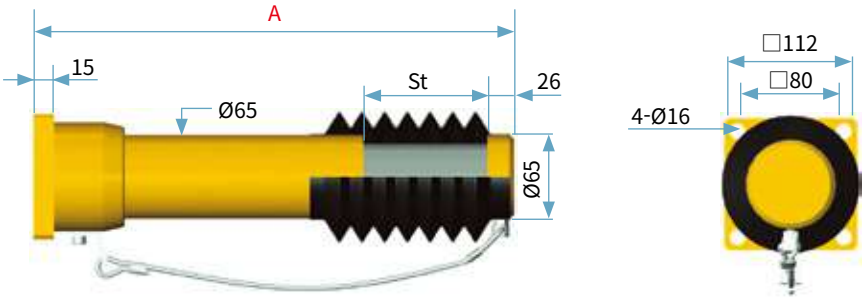

Front Mount

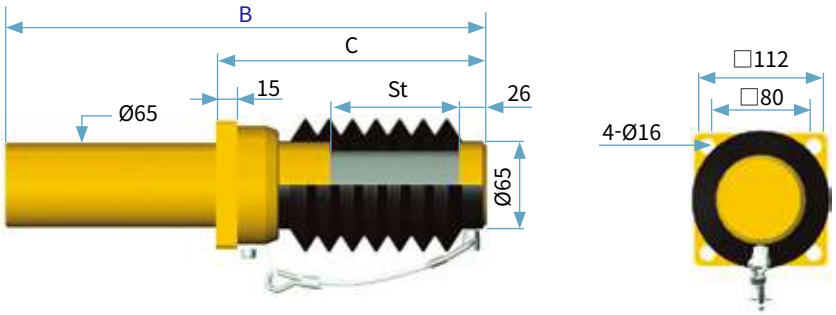

Dimensions (unit : mm)

Model	Stroke (mm) St	Rear Type	Front Type		Mounting Bolt Size
		A	B	C	
KHG65-25	25	262	250	126	
-50	50	312	300	151	
-75	75	372	360	176	
-100	100	432	420	231	14
-125	125	497	485	256	
-150	150	552	540	281	
-200	200	682	670	371	

KHG85 Series

Engineering Data

Model	Stroke (mm) St	Max.Energy / Cycle(kJ) E_T	Max Buffer Force(kN) F_S	Recoil Force(kN)		Max Side Load Angle(°)		Weight (kg)
				Ext	Comp	R Type	F Type	
KHG85-50	50	8	200		10	4	3.5	10
-100	100	16	200		13	3	3	13
-150	150	24	200	1.5	17	2	2	15
-200	200	32	200		19	1.8	1.5	17
-250	250	40	200		20	1.5	1.2	19

Rear Mount

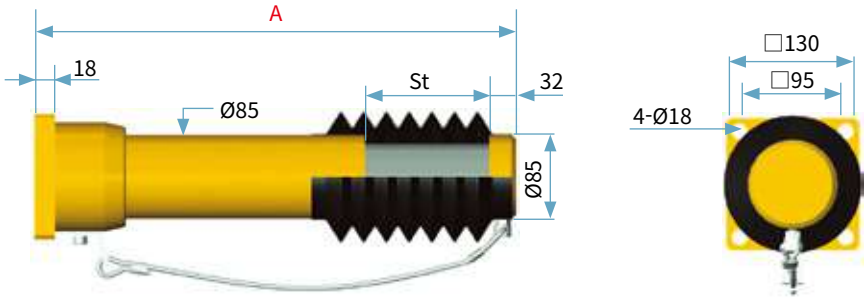

Front Mount

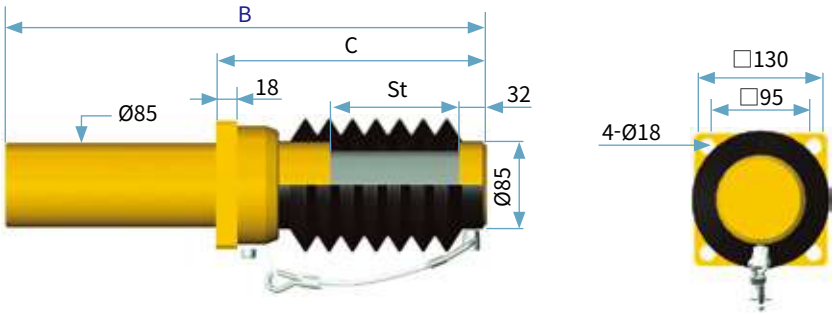

Dimensions (unit : mm)

Model	Stroke (mm) St	Rear Type	Front Type		Mounting Bolt Size
		A	B	C	
KHG85-50	50	323	310	183	
-100	100	463	450	242	
-150	150	603	590	305	16
-200	200	743	730	367	
-250	250	883	870	430	

KHG100 Series

Engineering Data

Model	Stroke (mm) St	Max.Energy / Cycle (kJ) E_T	Max Buffer Force (kN) F_S	Recoil Force(kN)		Max Side Load Angle(°)		Weight (kg)
				Ext	Comp	R Type	F Type	
KHG100-50	50	11	280	2.4	16	5	4	17
-80	80	18	280		16	4.5	4	19
-100	100	23	280		16	5	4	20
-120	120	27	280		20	4.5	3.5	22
-150	150	34	280		20	4.5	3.5	23
-200	200	46	280		20	4	3	26
-250	250	58	280		25	3.5	2.5	30
-300	300	69	280		25	3	2	34
-400	400	90	280		25	2.5	2	43
-500	500	110	275		25	2.5	2	53
-600	600	125	260		25	2	1.5	60
-800	800	140	210		25	2	1.5	73

Rear Mount

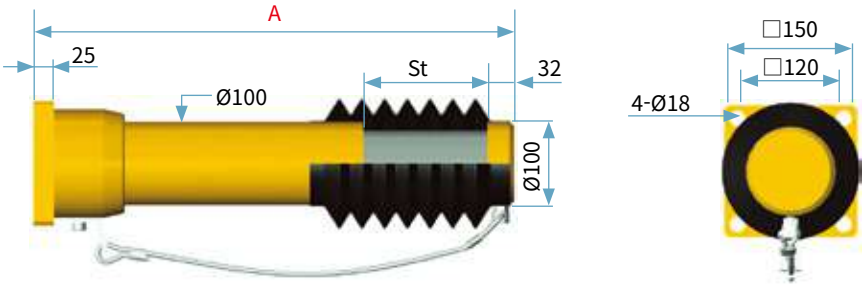

Front Mount

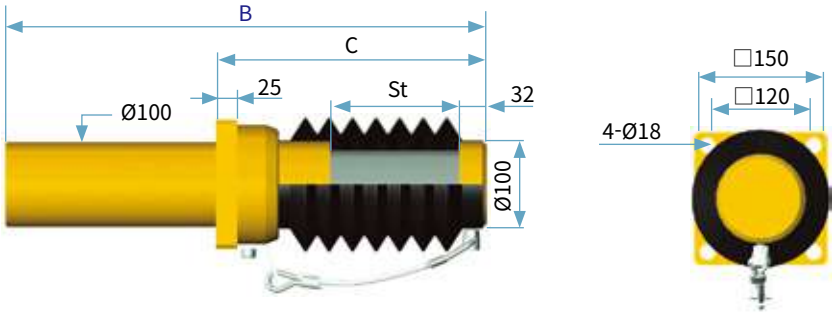

Dimensions (unit : mm)

Model	Stroke (mm) St	Rear Type	Front Type		Mounting Bolt Size
		A	B	C	
KHG100-50	50	332	312	175	16
-80	80	423	403	215	
-100	100	450	430	252	
-120	120	529	509	270	
-150	150	580	560	315	
-200	200	720	700	377	
-250	250	865	845	440	
-300	300	1,010	990	502	
-400	400	1,349	1,329	645	
-500	500	-	1,616	890	
-600	600	-	1,888	1,010	
-800	800	-	2,426	1,345	

KHG120 Series

Engineering Data

Model	Stroke (mm) St	Max.Energy / Cycle (kJ) E_T	Max Buffer Force (kN) F_S	Recoil Force(kN)		Max Side Load Angle(°)		Weight (kg)
				Ext	Comp	R Type	F Type	
KHG120-100	100	45	570	3.5	38	4	4.5	34
-150	150	70	570		38	4	3.5	39
-200	200	92	570		38	3.5	3.5	45
-250	250	114	570		40	3	3	50
-300	300	130	450		40	3	2.5	58
-400	400	160	450		40	2.5	2	66
-500	500	180	450		40	2	1.5	82
-600	600	200	450		40	2	1.5	94
-800	800	240	375		40	2	1.3	112
-1000	1,000	280	350		40	2	1.3	134

Rear Mount

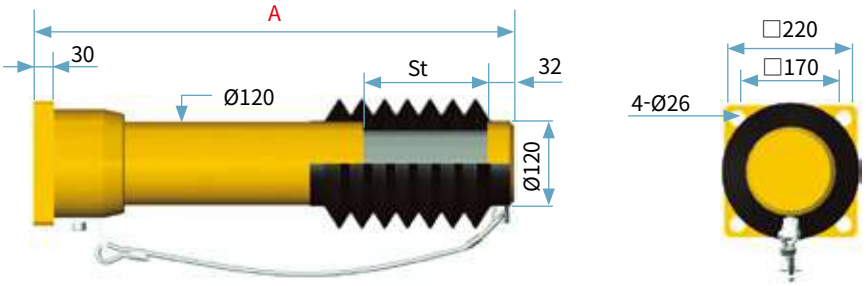

Front Mount

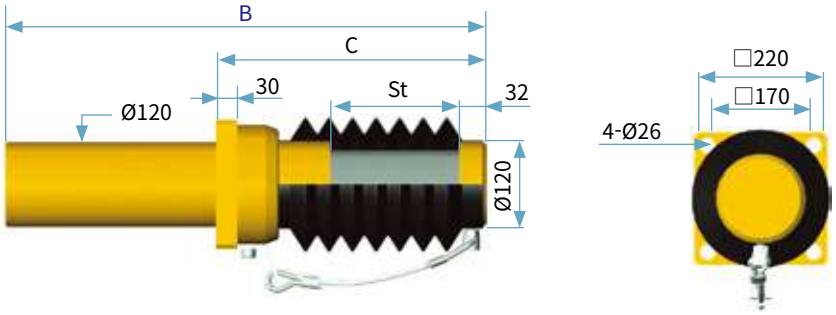

Dimensions (unit : mm)

Model	Stroke (mm) St	Rear Type	Front Type		Mounting Bolt Size
		A	B	C	
KHG120-100	100	470	450	277	24
-150	150	610	590	340	
-200	200	760	740	402	
-250	250	900	880	465	
-300	300	1,050	1,030	527	
-400	400	1,340	1,320	680	
-500	500	1,620	1,600	815	
-600	600	1,920	1,900	950	
-800	800	-	2,400	1,290	
-1000	1,000	-	2,960	1,360	

KHG130 Series

Engineering Data

Model	Stroke (mm) St	Max.Energy / Cycle (kJ) E_T	Max Buffer Force (kN) F_S	Recoil Force(kN)		Max Side Load Angle(°)		Weight (kg)
				Ext	Comp	R Type	F Type	
KHG130-250	250	120	550	4.5	40	4.5	4	62
-300	300	140	550		40	4.5	4	68
-400	400	180	550		50	4	3.5	79
-500	500	220	550		50	3.5	3.5	93
-600	600	260	550		50	2	1.5	107
-800	800	300	460		50	2	1.5	129

Rear Mount

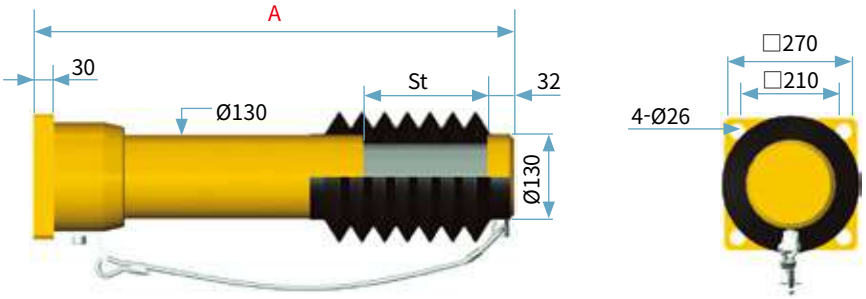

Front Mount

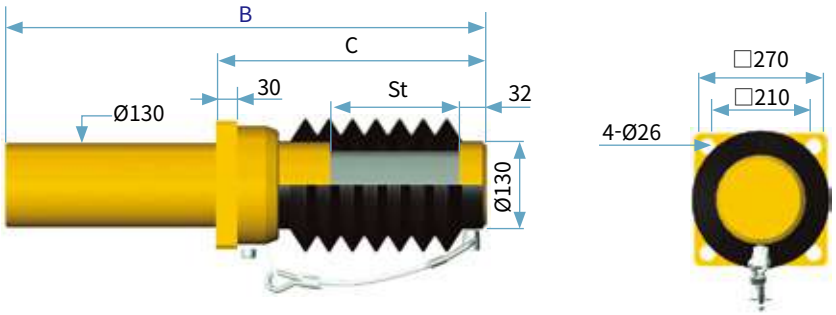

Dimensions (unit : mm)

Model	Stroke (mm) St	Rear Type	Front Type		Mounting Bolt Size
		A	B	C	
KHG130-250	250	897	877	545	24
-300	300	1,029	1,009	605	
-400	400	1,293	1,273	735	
-500	500	1,602	1,582	820	
-600	600	-	1,917	1,060	
-800	800	-	2,445	1,350	

KHG140 Series

Engineering Data

Model	Stroke (mm) St	Max.Energy / Cycle (kJ) E_T	Max Buffer Force (kN) F_S	Recoil Force(kN)		Max Side Load Angle(°)		Weight (kg)
				Ext	Comp	R Type	F Type	
KHG 140-100	100	62	760		38	4.5	4	49
-150	150	91	760		65	4.5	4	55
-200	200	124	730		70	4	3.5	62
-300	300	175	730		70	3.5	2.5	74
-400	400	234	730	5.5	78	2.5	1.5	76
-500	500	270	680		78	2	1.3	98
-600	600	300	630		78	2	1.3	111
-800	800	325	510		78	2	1.3	138
-1000	1,000	360	450		78	1.6	1.2	163

Rear Mount

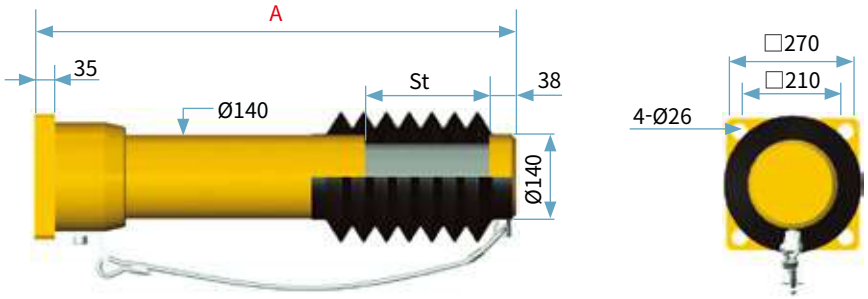

Front Mount

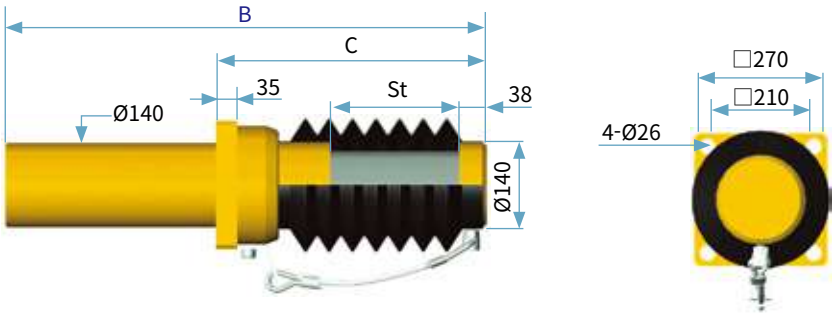

Dimensions (unit : mm)

Model	Stroke (mm) St	Rear Type	Front Type		Mounting Bolt Size
		A	B	C	
KHG140-100	100	480	460	297	
-150	150	620	600	360	
-200	200	770	750	422	
-300	300	1,060	1,040	547	
-400	400	1,350	1,330	712	24
-500	500	1,630	1,610	847	
-600	600	1,930	1,910	982	
-800	800	2,350	2,330	1,252	
-1000	1,000	-	2,880	1,595	

KHG150 Series

Engineering Data

Model	Stroke (mm) St	Max.Energy / Cycle (kJ) E_T	Max Buffer Force (kN) F_S	Recoil Force(kN)		Max Side Load Angle(°)		Weight (kg)
				Ext	Comp	R Type	F Type	
KHG150-100	100	70	880	6.2	45	4	4.5	57
-200	200	136	850		75	4	3.5	71
-300	300	183	770		75	3.5	3.5	85
-400	400	243	760		75	3	3	93
-500	500	297	740		85	3	2.5	113
-600	600	323	670		85	2.5	2	127
-800	800	448	700		85	2	1.5	150
-1000	1,000	550	689		85	2	1.5	176

Rear Mount

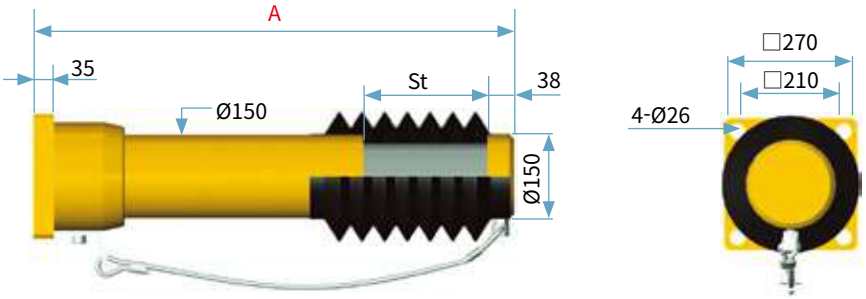

Front Mount

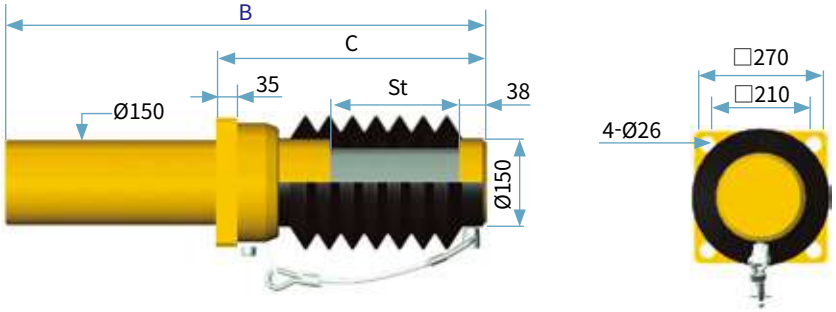

Dimensions (unit : mm)

Model	Stroke (mm) St	Rear Type	Front Type		Mounting Bolt Size
		A	B	C	
KHG150-100	100	510	490	327	24
-200	200	800	780	452	
-300	300	1,090	1,070	577	
-400	400	1,280	1,260	740	
-500	500	1,660	1,640	800	
-600	600	1,960	1,940	905	
-800	800	2,360	2,340	1,270	
-1000	1,000	2,910	2,890	1,625	

KHG180 Series

Engineering Data

Model	Stroke (mm) St	Max.Energy / Cycle (kJ) E_T	Max Buffer Force (kN) F_S	Recoil Force(kN)		Max Side Load Angle(°)		Weight (kg)
				Ext	Comp	R Type	F Type	
KHG 180-100	100	80	980	8	75	4.5	4	87
-200	200	160	980		80	4.5	4	105
-250	250	200	980		80	4.5	4	110
-400	400	280	880		90	4.5	4	165
-500	500	350	880		100	4	3.5	185
-600	600	430	890		100	3.5	3	206
-800	800	570	890		100	3	2.5	248
-1000	1,000	720	890		110	2.5	2	287

Rear Mount

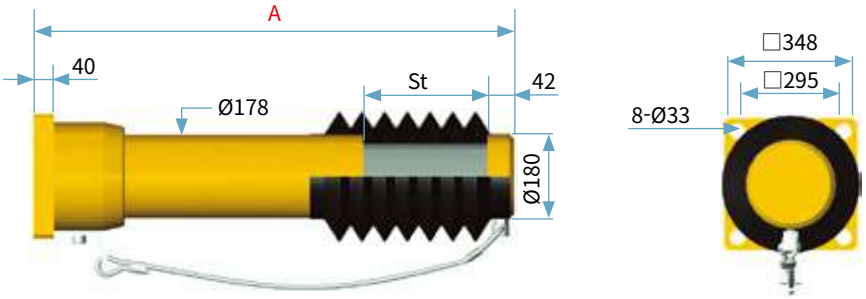

Front Mount

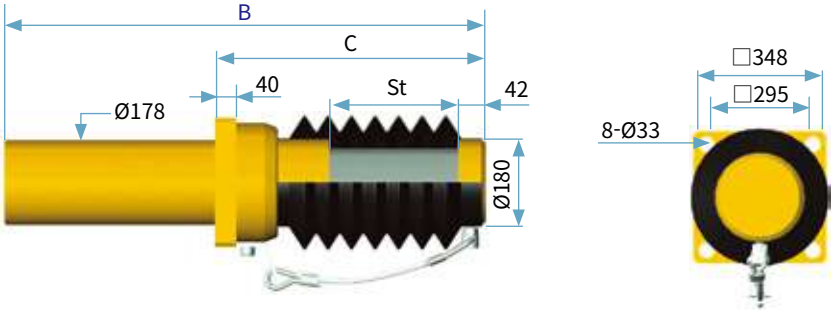

Dimensions (unit : mm)

Model	Stroke (mm) St	Rear Type	Front Type		Mounting Bolt Size
		A	B	C	
KHG180-100	100	491	471	350	30
-200	200	760	740	450	
-250	250	850	830	550	
-400	400	1,486	1,466	804	
-500	500	1,766	1,746	939	
-600	600	2,066	2,046	1,074	
-800	800	2,666	2,646	1,344	
-1000	1,000	3,226	3,206	1,614	

KHS Series Hydraulic Buffer

When the moving load is collided to bumper head, the piston rod enters inner tube according to stroke and check valve is closed with the oil chamber compressed. The oil in chamber is absorbed the impact force by discharging through multiple orifice.

After absorption of impact force, compressed piston rod is returned to original position by external return spring.

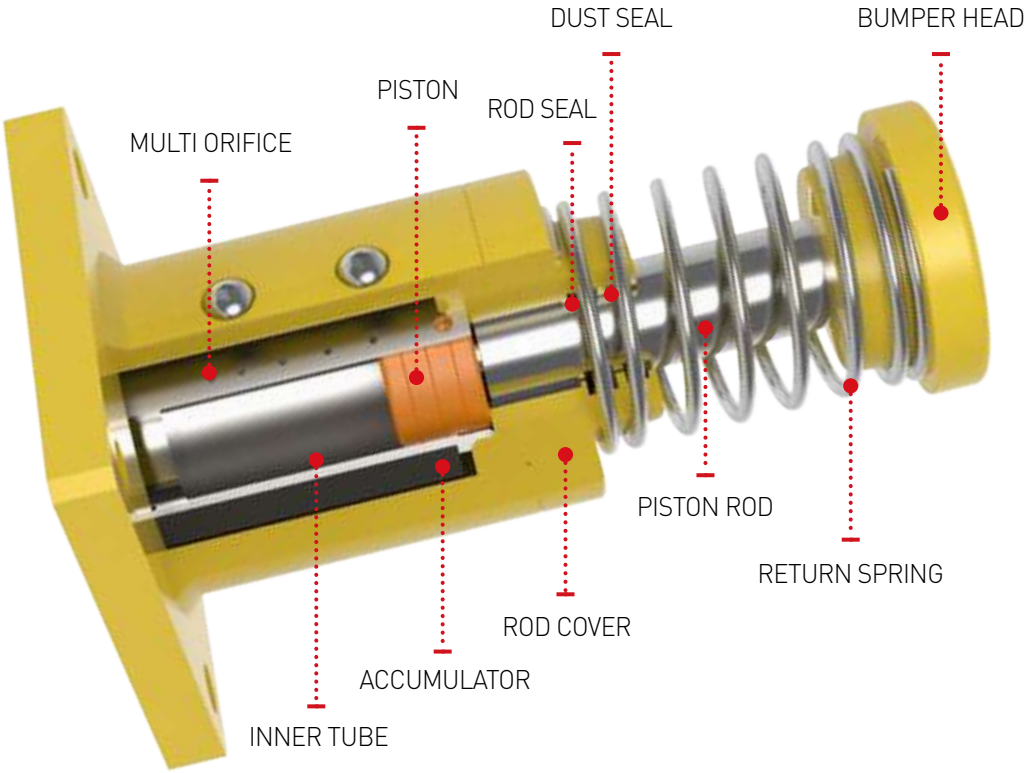

Feature

- As heavy buffer products, it optimized by customized orifices to develop high decelerate efficiencies. It is proper to apply emergency & production lines which requires repeat movements. It meets global industrial safety standards like OSHA, AIST, CMAA, DIN, FEM, etc.
- Adjustment type : Self adjustment type
- Applied fluid : Oil
- Temperature ranges : Standard (-10~80°C), Special (-30~100°C)
- Return mediator : Coil Return Spring
- Piston Rod : Hard Chrome (25㎛ or more)
- Body and Mount : Epoxy Paint Coatings

Application

✓ STS crane, Goliath crane, Stacker crane, Transfer car, Amusement park, Railway, Steel mill and all other areas of multi purposes.

KHS Series Ordering Information

KHS 130 - 150 - RS - B C

- Accessory Series
  - C : Safety Cable
  - B : Bellows
- Mount Type
  - RS : Rear Flange Mount
  - FS : Front Flange Mount
  - SS : Front and Rear Flange Mount
  - ※ RC : Rod Clevis
  - EC : End Clevis
- Stroke
- Body Dia
- KHS : Spring Return Way

Accessory

Bellows Cover

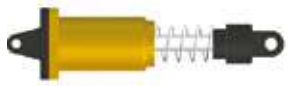

Clevis Mounting

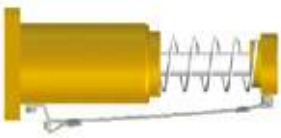

Front & Rear Safety Cable

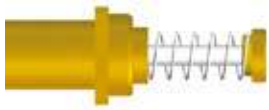

Front Mount

Special Order

- Temperature : -30~100°C
- Special Coatings
- Body Chrome Plating
- Stainless Steel

KHS64, 90, 100 Series

Engineering Data

Model	Stroke (mm) St	Max.Energy / Cycle (kJ) E_T	Max Buffer Force (kN) F_S	Recoil Force(N)		Max Side Load Angle(°)	Weight (kg)
				Ext	Comp		
KHS 64-50	50	0.5	12.5	6.5	14.8	3	3
KHS 90-50	50	4	100	14.2	30.5	3	6
75	75	6	100	10.5	19	3	7
-100	100	8	100	9.9	42	3	8
KHS 100-50	50	4.4	110	14.2	30.5	3	6
-100	100	8.8	110	9.9	42	3	8

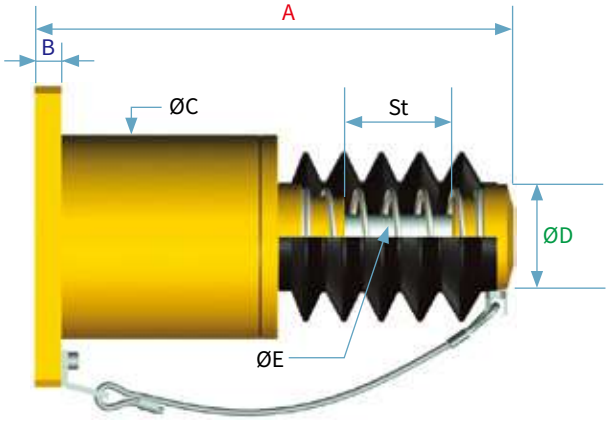

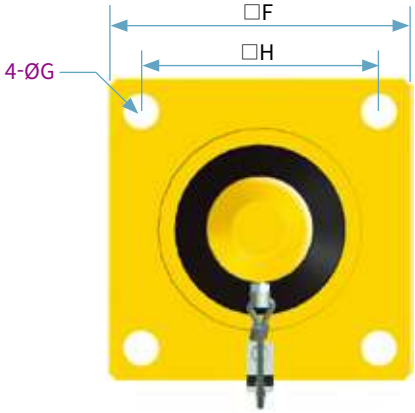

Dimensions (unit : mm)

Model	Stroke (mm) St	A	B	ØC	ØD	ØE (Rod)	□F	4-ØG	□H
KHS64 - 50	50	200	12	64	56	20	90	4-Ø11	65
KHS90 - 50	50	240	16	90	78	30	130	4-Ø14	100
-75	75	280	16	90	78	30	130	4-Ø14	100
-100	100	360	16	90	78	30	130	4-Ø14	100
KHS100 - 50	50	240	16	100	84	30	130	4-Ø14	100
-100	100	340	16	100	84	30	130	4-Ø14	100

KHS130, 170, 190 Series

Engineering Data

Model	Stroke (mm) St	Max.Energy / Cycle (kJ) E_T	Max Buffer Force (kN) F_S	Recoil Force(N)		Max Side Load Angle(°)	Weight (kg)
				Ext	Comp		
KHS 130-70	70	10	179	18.2	42.5	3	14
-100	100	15	188	17.8	48	3	16
-150	150	21	175	18.3	53.5	2.5	20
KHS 170-80	80	22	340	18.2	44.3	3	27
-150	150	41	340	18.3	53.5	2	36
KHS 190-100	100	40	500	17.8	48	2.5	40
-150	150	60	500	18.3	53.5	2	47

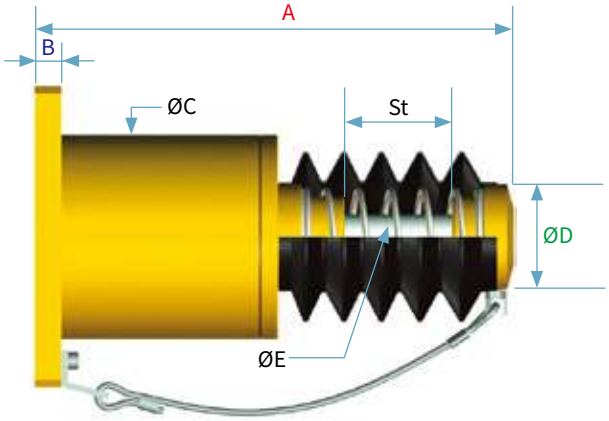

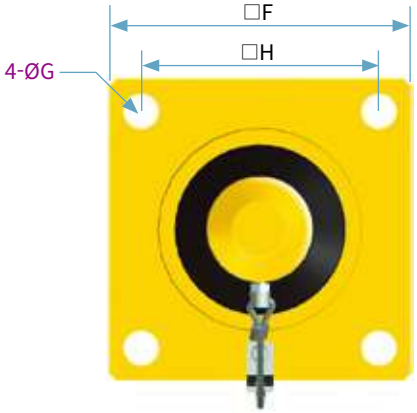

Dimensions (unit : mm)

Model	Stroke (mm) St	A	B	ØC	ØD	ØE (Rod)	□F	4-ØG	□H
KHS130 - 70	70	290	19	130	98	Ø35	170	4-Ø22	130
-100	100	350	19	130	98	Ø35	170	4-Ø22	130
-150	150	490	19	130	98	Ø35	170	4-Ø22	130
KHS170 - 80	80	360	22	170	98	Ø50	220	4-Ø26	170
-150	150	500	22	170	98	Ø50	220	4-Ø26	170
KHS190 - 100	100	440	25	190	98	Ø50	280	4-Ø33	220
-150	150	540	25	190	98	Ø50	280	4-Ø33	220

KHS220, 250 Series

Engineering Data

Model	Stroke (mm) St	Max.Energy / Cycle (kJ) E_T	Max Buffer Force (kN) F_S	Recoil Force(N)		Max Side Load Angle (°)	Weight (kg)
				Ext	Comp		
KHS 220-100	100	44	550	40.5	134	2.5	49
-150	150	66	550	41.8	131	2	57
KHS 250-100	100	60	750	38.5	111.2	2.5	73
-150	150	90	750	34.2	107.5	2	96
-200	200	120	750	33	105	2	108
-300	300	180	750	38	121.8	2	117

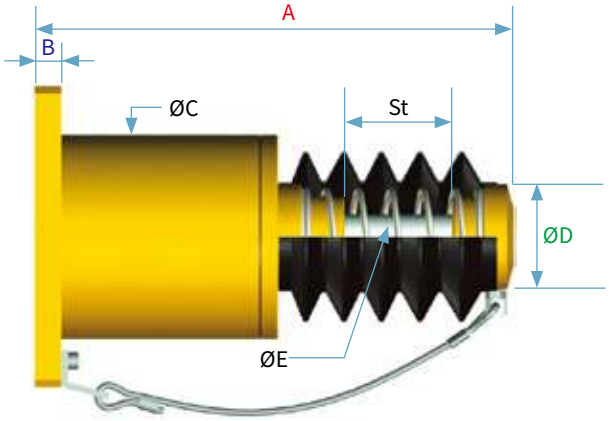

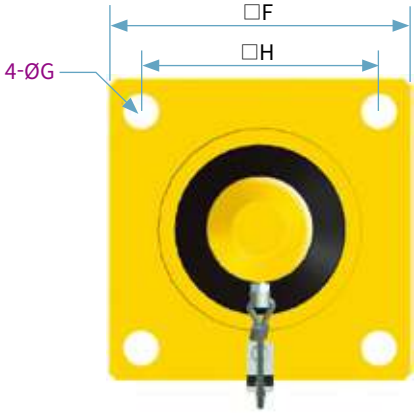

Dimensions (unit : mm)

Model	Stroke (mm) St	A	B	ØC	ØD	ØE (Rod)	□F	4-ØG	□H
KHS220 - 100	100	440	25	220	116	60	280	4-Ø33	220
-150	150	540	25	220	116	60	280	4-Ø33	220
KHS250 - 100	100	480	32	250	138	70	320	4-Ø33	250
-150	150	650	32	250	158	70	320	4-Ø33	250
-200	200	750	32	250	158	70	320	4-Ø33	250
-300	300	880	32	250	158	70	320	4-Ø33	250

KHS300, 340, 360 Series

Engineering Data

Model	Stroke (mm) St	Max.Energy / Cycle (kJ) E_T	Max Buffer Force (kN) F_S	Recoil Force(N)		Max Side Load Angle (°)	Weight (kg)
				Ext	Comp		
KHS 300-150	150	117	975	46	142	2	139
-250	250	180	1,125	45	151	1.5	170
KHS 340-200	200	200	1,250	51	162	1.5	208
-300	300	300	1,250	49	176	1.5	240
KHS 360-250	250	294	1,470	68	178	1.5	267
-400	400	470	1,470	64	182	1.5	319

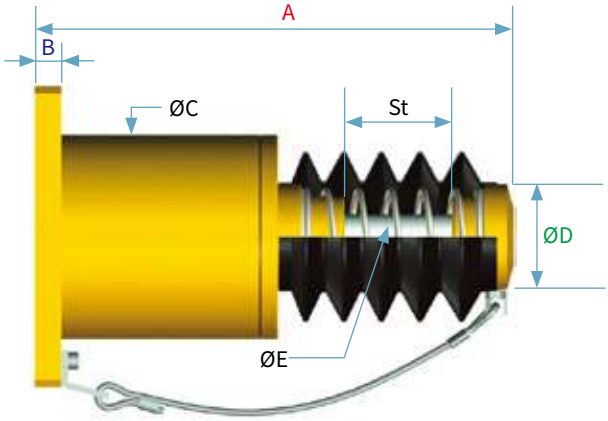

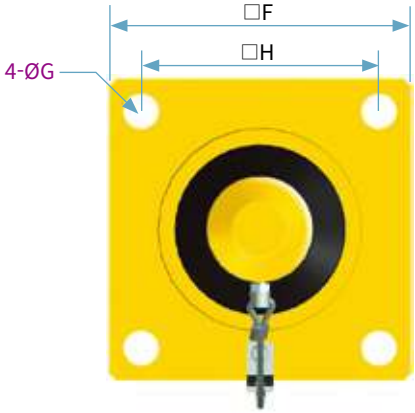

Dimensions (unit : mm)

Model	Stroke (mm) St	A	B	ØC	ØD	ØE (Rod)	□F	4-ØG	□H
KHS300 - 150	150	650	36	300	170	80	400	4-Ø33	300
-250	250	850	36	300	170	80	400	4-Ø33	300
KHS340 -200	200	800	45	340	228	100	440	4-Ø39	340
-300	300	1,000	45	340	228	100	440	4-Ø39	340
KHS360 - 250	250	900	45	356	280	100	460	4-Ø39	360
-400	400	1,200	45	356	280	100	460	4-Ø39	360

KCSC Series Stacker Crane Buffer

KCSC Series is Gas Return Type and its gas amount is designed to be relatively larger than oil amount, so it has low peak and low recoil force. Therefore, it operates with minimum resistance during normal operation and safely decelerates in case of emergency.
KCSC Series is mainly used for stacker crane of automated logistics system. It has standard products with Stroke up to 1,500mm and energy absorption capacity up to 800kJ, and other special specifications can be produced on the basis of order made.
Also it follows industrial safety standards such as OSHA, AIST, CMMA, DIN, FEM, etc.

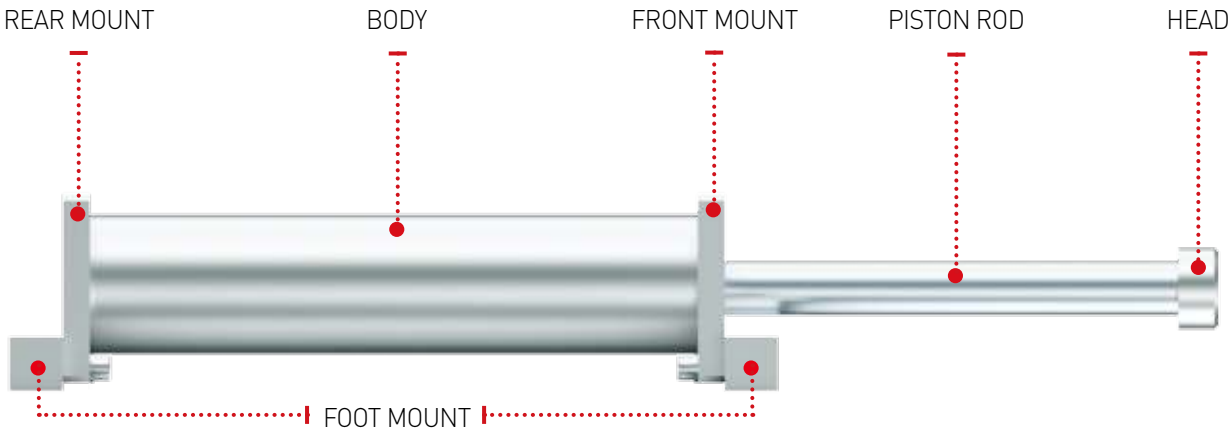

Feature

- Standard impact velocity : 3.8m/s
- Temperature ranges : Standard (-10~80°C), Special (-30~100°C)
- Return mediator : Nitrogen Gas
- Piston Rod : Hard Chrome (25㎛ or more)
- Body and Mount : Epoxy Paint Coatings

Application

✓ Stacker crane, amusement park, car production line, overhead crane, logistics warehouse automation system and all other areas of multi purposes.

Options

✓ Protective Bellows
✓ Safety Cable
✓ Urethane Cap
✓ Mounting Plates
✓ Foot Mounts
✓ Sensor

KCSC Series Ordering Information

KCSC 90 - 50 - RS - B C

- Accessory Series
  - C : Safety Cable
  - B : Bellows
  - UC : Urethane Cap
- Mount Type
  - RS : Rear Flange
  - FS : Front Flange
  - FM : Foot Mount
- Stroke
- Body Dia
- Series

Special Type

Urethane Cap

Sensor Type

Special Order

- Temperature : -30~100°C
- Special Coatings
- Body Chrome Plating
- Stainless Steel

KCSC90 Series

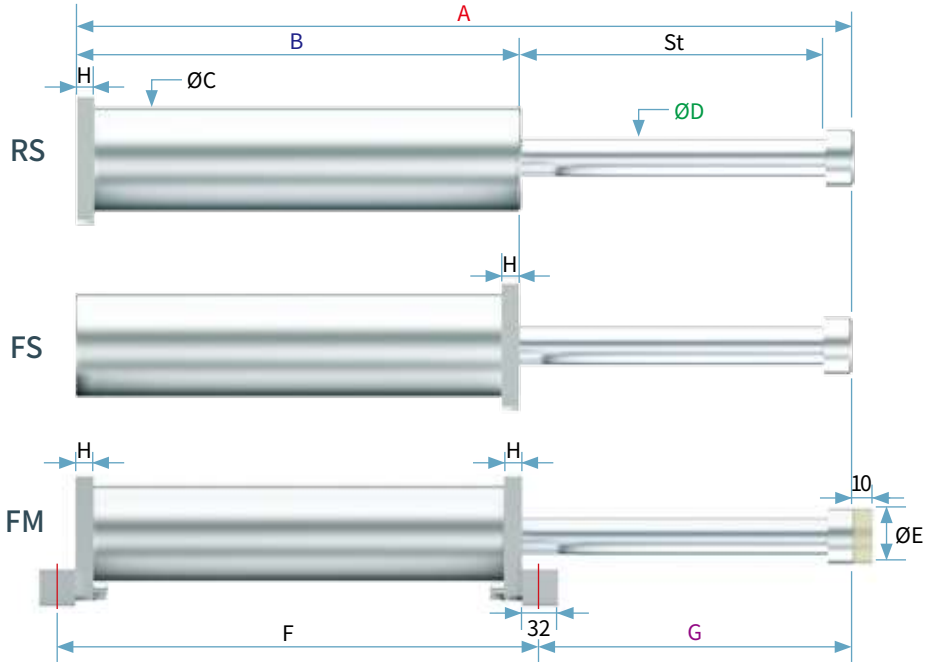

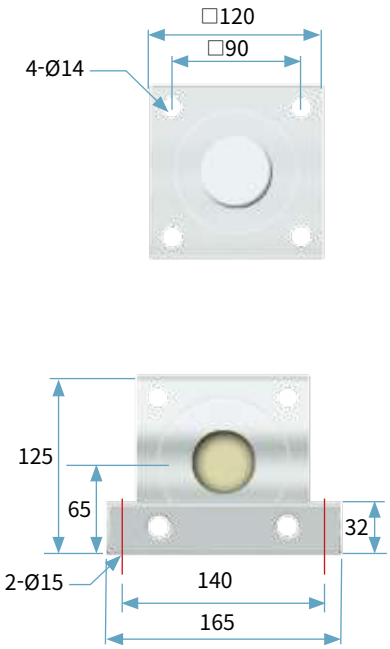

Engineering Data

Model	Stroke (mm) St	Max. Energy /Cycle (kJ) E_T	Max. Energy /Hour (kJ/hr) E_TC	Max. Shock Force (kN) F_S	Dimension (unit : mm)							
					A	B	ØC	ØD	ØE	F	G	H
KCSC90-50	50	5	251	130	310	208	90	30	50	240	86	20
-100	100	10	514	130	410	258	90	30	50	290	136	20
-150	150	16	764	130	510	308	90	30	50	340	186	20
-200	200	21	1,019	130	613	360	90	30	50	392	237	20
-250	250	26	1,091	130	715	411	90	30	50	443	288	20
-300	300	31	1,222	130	817	462	90	30	50	494	339	20
-350	350	36	1,645	130	918	512	90	30	50	544	390	20
-400	400	42	1,495	130	1,019	563	90	30	50	595	440	20
-450	450	48	1,417	133	1,121	614	90	30	50	646	491	20
-500	500	52	1,378	131	1,223	665	90	30	50	697	542	20
-600	600	59	1,144	122	1,427	767	90	30	50	799	644	20
-700	700	66	793	118	1,668	910	90	30	50	942	742	20
-800	800	75	701	118	1,888	1,030	90	30	50	1,076	842	20

KCSC110 Series

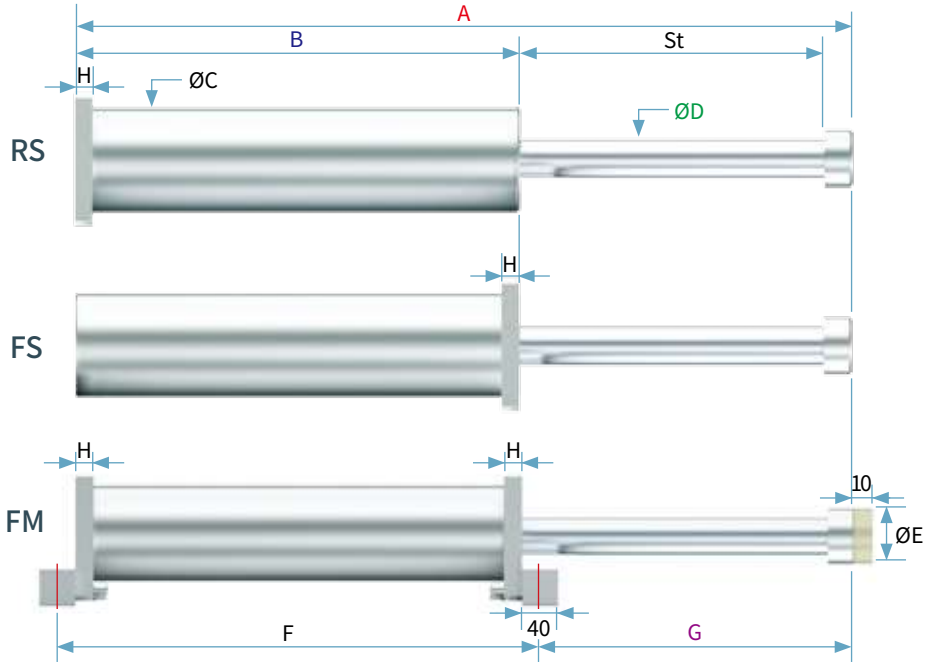

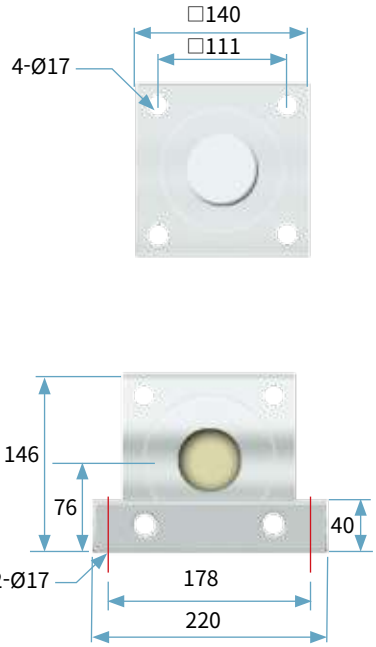

Engineering Data

Model	Stroke (mm) St	Max. Energy /Cycle (kJ) E_T	Max. Energy /Hour (kJ/hr) E_TC	Max. Shock Force (kN) F_S	Dimension (unit : mm)							
					A	B	ØC	ØD	ØE	F	G	H
KCSC110-50	50	8	385	195	370	230	110	40	60	270	120	25
-100	100	14	738	179	470	280	110	40	60	340	170	25
-150	150	21	1,145	179	553	339	110	40	60	379	194	25
-200	200	29	1,214	179	655	390	110	40	60	430	245	25
-250	250	35	1,373	176	757	441	110	40	60	481	296	25
-300	300	43	1,542	179	859	492	110	40	60	532	347	25
-350	350	49	1,758	176	960	543	110	40	60	583	397	25
-400	400	57	1,972	179	1,062	594	110	40	60	634	448	25
-450	450	64	2,184	177	1,164	645	110	40	60	685	499	25
-500	500	72	2,399	179	1,265	695	110	40	60	735	550	25
-600	600	86	2,818	179	1,469	797	110	40	60	837	652	25
-700	700	99	3,231	176	1,672	899	110	40	60	939	753	25
-800	800	108	3,648	169	1,953	1,079	110	40	60	1,119	854	25
-900	900	114	4,069	159	2,151	1,179	110	40	60	1,219	952	25
-1000	1,000	117	4,528	146	2,351	1,279	110	40	60	1,319	1,052	25
-1200	1,200	125	3,585	130	2,751	1,479	110	40	60	1,519	1,252	25
-1400	1,400	135	2,492	121	3,171	1,689	110	40	60	1,729	1,462	25

KCSC130 Series

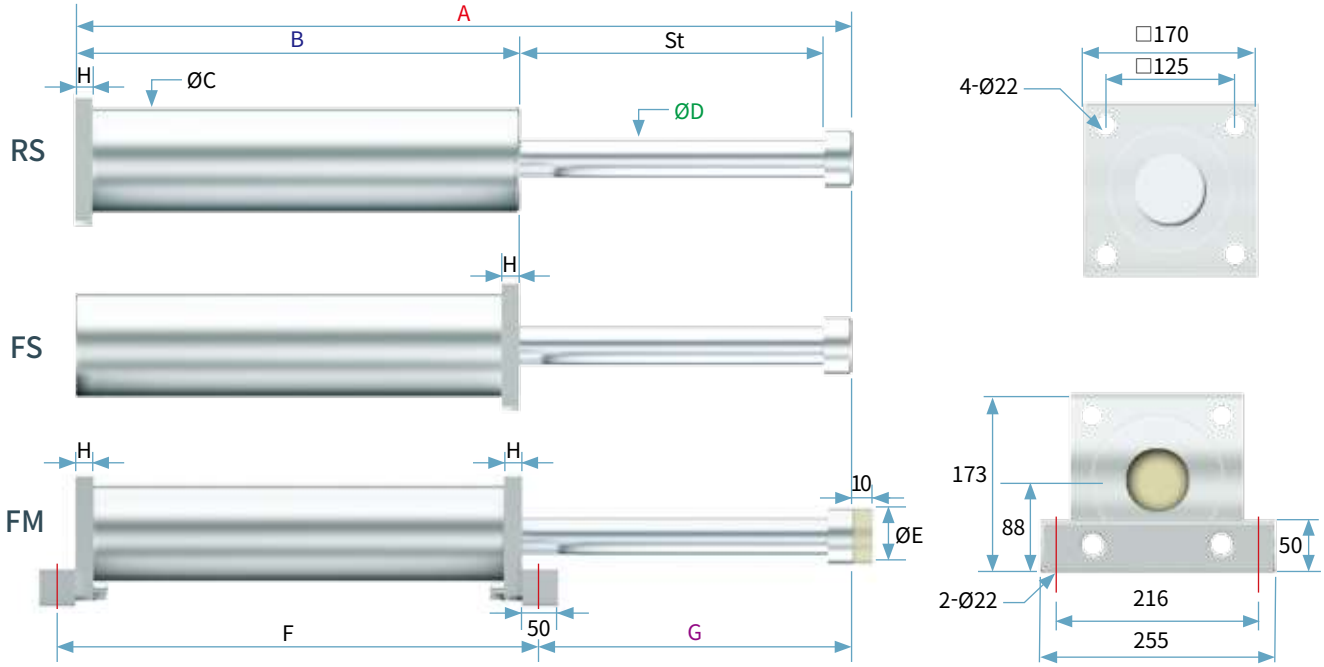

Engineering Data

Model	Stroke (mm) St	Max. Energy /Cycle (kJ) E_T	Max. Energy /Hour (kJ/hr) E_TC	Max. Shock Force (kN) F_S	Dimension (unit : mm)							
					A	B	ØC	ØD	ØE	F	G	H
KCSC130-50	50	12	767	312	336	203	138	45	70	253	108	25
-75	75	19	857	312	387	229	138	45	70	279	137	25
-125	125	31	1,060	312	489	280	138	45	70	330	184	25
-200	200	50	1,443	312	640	355	138	45	70	405	260	25
-250	250	62	1,708	312	742	406	138	45	70	456	311	25
-300	300	75	1,966	312	844	457	138	45	70	561	362	25
-350	350	87	2,257	312	995	558	138	45	70	608	412	25
-400	400	100	2,514	312	1,097	609	138	45	70	659	463	25
-450	450	112	2,773	312	1,199	660	138	45	70	710	514	25
-500	500	122	3,028	306	1,301	711	138	45	70	761	565	25
-600	600	147	3,528	306	1,504	812	138	45	70	862	667	25
-700	700	178	4,033	318	1,707	914	138	45	70	964	768	25
-800	800	195	4,532	305	1,910	1,015	138	45	70	1,065	870	25
-900	900	208	4,921	289	2,156	1,164	138	45	70	1,214	967	25
-1000	1,000	228	4,971	284	2,356	1,264	138	45	70	1,314	1,067	25
-1200	1,200	244	6,139	255	2,756	1,464	138	45	70	1,514	1,267	25
-1400	1,400	254	3,706	226	3,156	1,664	138	45	70	1,714	1,467	25
-1500	1,500	267	3,169	222	3,384	1,778	138	45	70	1,828	1,581	25

KCSC200 Series

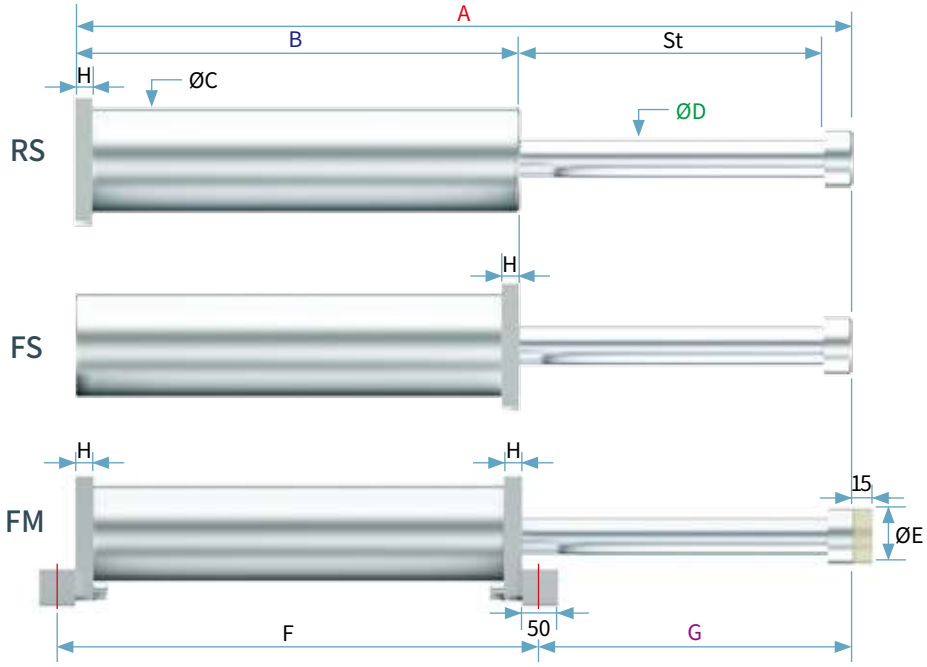

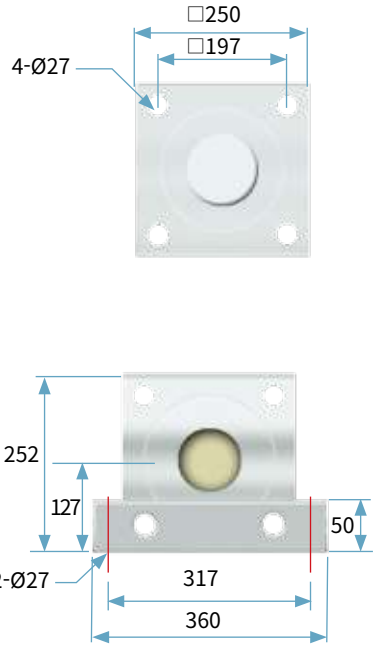

Engineering Data

Model	Stroke (mm) St	Max. Energy /Cycle (kJ) E_T	Max. Energy /Hour (kJ/hr) E_TC	Max. Shock Force (kN) F_S	Dimension (unit : mm)							
					A	B	ØC	ØD	ØE	F	G	H
KCSC200-50	50	20	1,226	504	430	294	200	65	100	344	111	40
-100	100	40	1,994	504	532	345	200	65	100	395	162	40
-150	150	60	2,283	504	632	395	200	65	100	445	212	40
-200	200	81	2,584	504	735	447	200	65	100	497	263	40
-250	250	101	2,873	504	836	497	200	65	100	547	314	40
-300	300	121	3,712	504	1,032	642	200	65	100	692	365	40
-400	400	161	4,295	504	1,234	743	200	65	100	793	466	40
-500	500	202	4,885	504	1,438	845	200	65	100	895	568	40
-600	600	242	5,474	504	1,642	947	200	65	100	997	670	40
-700	700	282	6,059	504	1,844	1,048	200	65	100	1098	771	40
-800	800	322	6,648	504	2,048	1,150	200	65	100	1,200	873	40
-900	900	363	7,238	504	2,252	1,252	200	65	100	1,302	975	40
-1000	1,000	377	7,952	471	2,454	1,353	200	65	100	1,403	1,076	40
-1200	1,200	429	6,396	447	2,854	1,553	200	65	100	1,603	1,276	40

KCSC215 Series

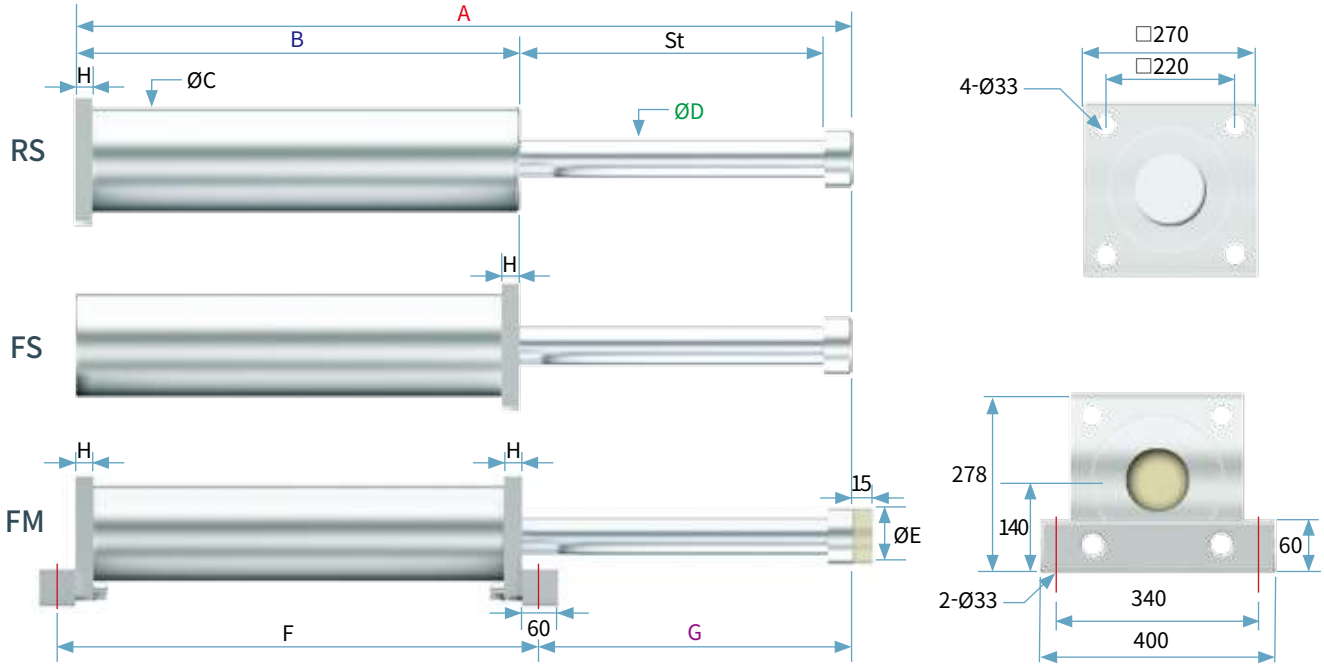

Engineering Data

Model	Stroke (mm) St	Max. Energy /Cycle (kJ) E_T	Max. Energy /Hour (kJ/hr) E_TC	Max. Shock Force (kN) F_S	Dimension (unit : mm)							
					A	B	ØC	ØD	ØE	F	G	H
KCSC215-100	100	61	2,345	764	591	375	215	80	125	435	186	40
-150	150	92	2,666	769	693	426	215	80	125	486	237	40
-200	200	122	2,977	764	795	477	215	80	125	537	288	40
-250	250	166	3,289	832	895	527	215	80	125	587	338	40
-300	300	185	3,608	769	997	578	215	80	125	638	389	40
-400	400	244	4,245	764	1,201	680	215	80	125	740	491	40
-500	500	306	5,504	764	1,504	882	215	80	125	942	592	40
-600	600	368	6,163	766	1,708	984	215	80	125	1,044	694	40
-700	700	429	6,772	766	1,910	1,085	215	80	125	1,145	795	40
-800	800	488	7,409	762	2,114	1,187	215	80	125	1,247	897	40
-1000	1,000	608	8,693	761	2,520	1,390	215	80	125	1,450	1,100	40
-1200	1,200	697	8,132	726	2,920	1,590	215	80	125	1,650	1,300	40

KCSC275 Series

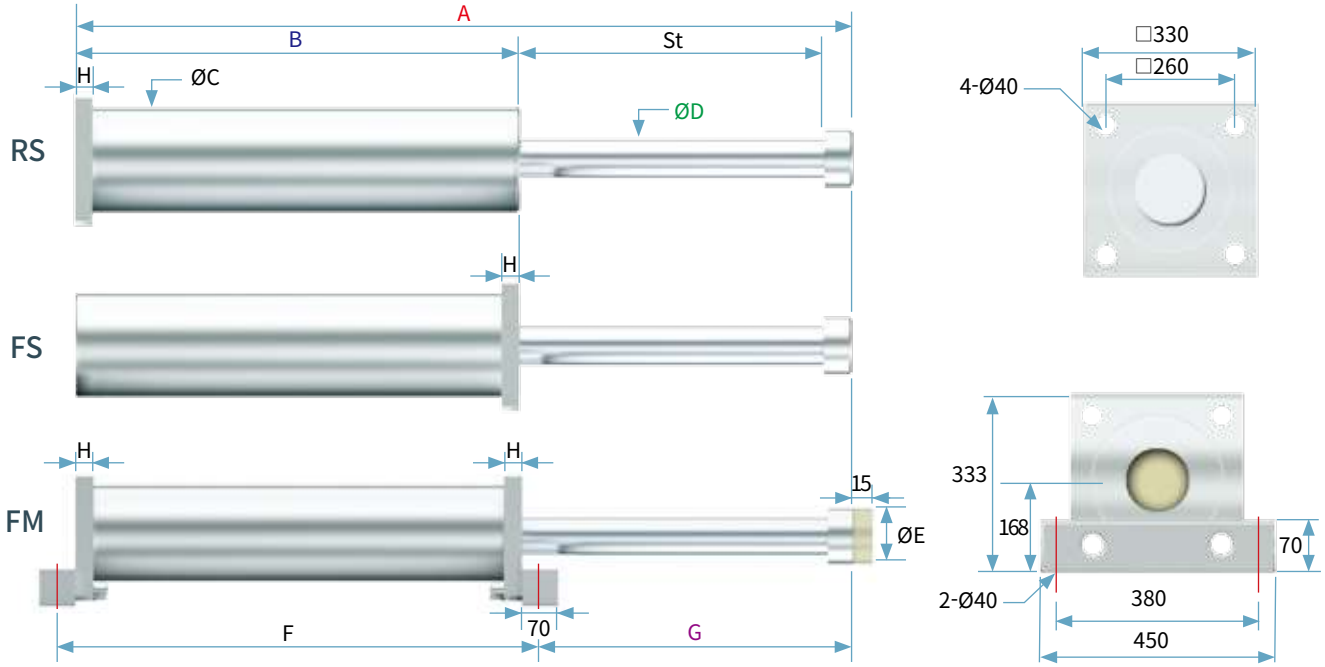

Engineering Data

Model	Stroke (mm) St	Max. Energy /Cycle (kJ) E_T	Max. Energy /Hour (kJ/hr) E_TC	Max. Shock Force (kN) F_S	Dimension (unit : mm)							
					A	B	ØC	ØD	ØE	F	G	H
KCSC275-100	100	101	3,179	1,268	637	391	Ø275	100	160	461	211	50
-150	150	152	3,596	1,268	737	441	Ø275	100	160	511	261	50
-200	200	203	3,969	1,268	839	492	Ø275	100	160	562	312	50
-250	250	252	4,385	1,261	941	543	Ø275	100	160	613	363	50
-300	300	303	4,897	1,262	1,043	594	Ø275	100	160	664	414	50
-400	400	404	5,594	1,263	1,246	696	Ø275	100	160	766	515	50
-500	500	506	6,414	1,264	1,450	798	Ø275	100	160	868	617	50
-600	600	607	8,042	1,265	1,769	1,015	Ø275	100	160	1,085	719	50
-750	750	758	9,252	1,263	2,073	1,167	Ø275	100	160	1,237	871	50
-900	900	910	10,462	1,264	2,379	1,320	Ø275	100	160	1,390	1,024	50
-1050	1,050	1,061	11,661	1,263	2,683	1,472	Ø275	100	160	1,542	1,176	50
-1200	1,200	1,027	10,479	1,070	2,989	1,625	Ø275	100	160	1,695	1,329	50

KOBA
BEST SHOCK ABSORBER

Visco-Elastic Buffer

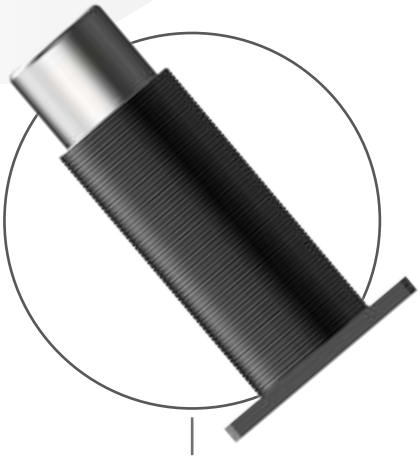

KESM Series

KESE Series

KESH Series

KVD Series

KES Series Visco-Elastic Buffer

KES Series is developed on behalf of spring or shock absorber by fluid statics' compression principle and even it is simple and robust but can exert a large damping force despite of small return device such as appearance.
Because KES Series has spring and shock absorption function in one structure, Gas spring and Coil Spring is not needed and has a long lasting feature of damping performance in wide temperature range.

Feature

- Standard impact velocity : 3.8m/s
- Temperature ranges : Standard (-10~80°C), Special (-30~100°C)
- Piston Rod : Hard Chrome (25㎛ or more)
- Body and Mount : Epoxy Paint Coatings

Application

✓ For protection in wide industrial impact protection, especially Firewall, Cars, Railways, Marine Industry, Steel, paper, etc.

Spring Feature	Visco-elastic Function
F_0 : Initial Force, C : Damping coefficient, V : Impact Velocity, $0.1 \leq \alpha \leq 0.4$	
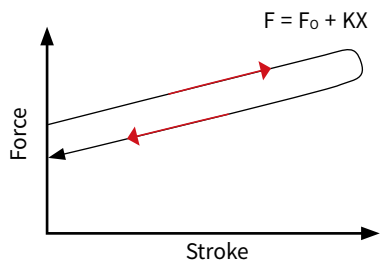	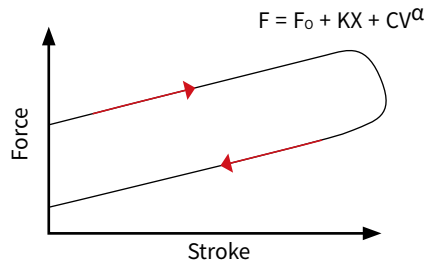

KES Series Ordering Information

KES M - 116 - 50 - RF

- RF: RS : Rear Flange / FS : Front Flange / FM : Foot Mount
- 50: Stroke
- 116: Body Dia
- M: Model : M, E, S, H
- KES: Series

Model selection guide

Example : KESM Series

- Impact velocity (V_e) : 1.5 m/s
- Impact mass (m_e) : 5 ton
- Impact frequency : 20 impact/h

1. Energy calculation (E)

$$E_T = \frac{1}{2} m_e V_e^2 \qquad E = \frac{1}{2} \times 5{,}000 \times 1.5^2 = 5{,}625\ Nm = 5.6\ kJ$$

2. Temporary Model Selection

KESM90-60 $\quad E_T = 7\,[kJ] \quad (E < E_T)$

KESS50-150 $\quad E_T = 6\,[kJ]$

3. Allowable Impact Frequency

■ Case1 : KESM90-60 $\quad C_e = 20 < 20 \cdot \frac{E_T}{E} = 20 \cdot \frac{7}{5.6} = 25\ [impact/h]$

■ Case2 : KESS50-150 $\quad C_e = 20 > 8 \cdot \frac{E_T}{E} = 8 \cdot \frac{6}{5.6} = 8.57\ [impact/h]$ (dissatisfaction)

4. Required Stroke Calculation

$$S_e = S\left(\sqrt{\frac{E}{E_T(0.03V + 0.24)}} + 1.36 - 1.17\right)$$

$$= 60\left(\sqrt{\frac{5.6}{7\,(0.03 \times 1.5 + 0.24)}} + 1.36 - 1.17\right) = 52.3[mm]$$

5. Calculation of Effective Reaction

$$F_{ME} = \left[\left(\frac{RDmax - RDmin}{S}\right)S_e + RDmin\right](0.1 \times V_e + 0.8)$$

$$= \left[\left(\frac{150 - 90}{60}\right) \times 52.3 + 90\right](0.1 \times 1.5 + 0.8) = 135.18[kN]$$

6. Final Model Selection

KESM90-60

E_T : Max Energy/cycle (kJ)

Model selection guide

Example : KESE Series

- Impact velocity (V_e) : 1.8 m/s
- Impact mass (m_e) : 40 ton
- Impact frequency (C_e) : 15 impact/h

1. Energy calculation (E)

$$E_T = \frac{1}{2} m_e V_e^2 \qquad E = \frac{1}{2} \times 40{,}000 \times 1.8^2 = 64{,}800\ Nm = 64.8\ kJ$$

2. Temporary Model Selection

KESE160-140 $\quad E_T = 75\,[kJ] \quad (E < E_T)$

KESS110-400H $\quad E_T = 100\,[kJ]$

3. Allowable Impact Frequency

■ Case1 : KESE160-140 $\quad C_e = 15 < 15 \cdot \frac{E_T}{E} = 15 \cdot \frac{75}{64.8} = 17.36\ [impact/h]$

■ Case2 : KESS110-400H $\quad C_e = 15 > 8 \cdot \frac{E_T}{E} = 8 \cdot \frac{100}{64.8} = 12.34\ [impact/h]$ (dissatisfaction)

4. Required Stroke Calculation

$$S_e = S\left(\sqrt{\frac{E}{E_T(0.03V + 0.24)}} + 1.36 - 1.17\right)$$

$$= 140\left(\sqrt{\frac{64.8}{75\,(0.03 \times 1.8 + 0.24)}} + 1.36 - 1.17\right) = 126.47\ [mm]$$

5. Calculation of Effective Reaction

$$F_{ME} = \left[\left(\frac{RDmax - RDmin}{S}\right) S_e + RDmin\right](0.1 \times V_e + 0.8)$$

$$= \left[\left(\frac{700 - 400}{140}\right) \times 52.3 + 90\right](0.1 \times 1.8 + 0.8) = 657.87\ [kN]$$

6. Final Model Selection

KESE160-140

E_T : Max Energy/cycle (kJ)

Model selection guide

Example : KESS Series

- Impact velocity (V_e) : 2.8 m/s
- Impactor mass (m_e) : 20 ton
- Impact frequency (C_e) : 8 impact/h
- Allowable Reaction Force : 350 kN
- Allowable D1 : 150 mm

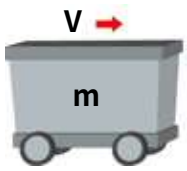

1. Energy calculation (E)

$$E_T = \frac{1}{2} m_e V_e^2 \qquad E = \frac{1}{2} \times 20{,}000 \times 2.8^2 = 78{,}400\ Nm = 78.4\ kJ$$

2. Temporary Model Selection

KESS110-400H $\qquad E_T$ = 100 $[kJ]$ $\qquad (E < E_T)$

3. Allowable Impact Frequency

$$C_e = 8 < 8 \cdot \frac{E_T}{E} = 8 \cdot \frac{100}{78.4} = 10.2\ [impact/h]$$

4. Required Stroke Calculation

$$S_e = S\left(\sqrt{\frac{E}{E_T\,(0.03V + 0.24)}} + 1.36 - 1.17\right)$$

$$= 400\left(\sqrt{\frac{78.4}{100\ (0.03\times 2.8 + 0.24)}} + 1.36 - 1.17\right) = 290.8\ [mm]$$

5. Calculation of Effective Reaction

$$F_{ME} = \left[\left(\frac{RDmax - RDmin}{S}\right)S_e + RDmin\right](0.1\times V_e + 0.8)$$

$$= \left[\left(\frac{320 - 175}{400}\right)\times 290.8 + 175\right](0.1\times 2.8 + 0.8) = 302.8\ [kN]$$

6. Final Model Selection

KESH175-850

E_T : Max Energy/cycle (kJ)

Model selection guide

Example : KESH Series

- Impact velocity (V_e) : 2.8 m/s
- Impactor mass (m_e) : 80 ton
- Impact frequency (C_e) : 8 impact/h
- Allowable Reaction Force : 650 kN

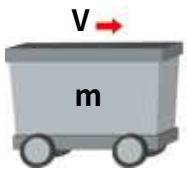

1. Energy calculation (E)

$$E_T = \frac{1}{2} m_e V_e^2 \qquad E = \frac{1}{2} \times 80{,}000 \times 2.8^2 = 313{,}600\ Nm = 313.6\ kJ$$

2. Temporary Model Selection

KESH175-850 $\qquad E_T$ = 100 $[kJ]$ $\qquad (E < E_T)$

3. Allowable Impact Frequency

$$C_e = 8 < 8 \cdot \frac{E_T}{E} = 8 \cdot \frac{400}{313.6} = 10.2\ [impact/h]$$

4. Required Stroke Calculation

$$S_e = S\left(\sqrt{\frac{E}{E_T\,(0.03V + 0.24)} + 1.36 - 1.17}\right)$$

$$= 400\left(\sqrt{\frac{313.6}{400\ (0.03\times 2.8 + 0.24)} + 1.36 - 1.17}\right) = 658.0\ [mm]$$

5. Calculation of Effective Reaction

$$F_{ME} = \left[\left(\frac{RDmax - RDmin}{S}\right)S_e + RDmin\right](0.1\times V_e + 0.8)$$

$$= \left[\left(\frac{600 - 330}{850}\right)\times 658.0 + 330\right](0.1\times 2.8 + 0.8) = 582.1\ [kN]$$

6. Final Model Selection

KESH175-850

E_T : Max Energy/cycle (kJ)

KESM Series

Engineering Data

Model	Stroke (mm) St	Max.Energy / Cycle (kJ) E_T	Dyn. Reaction Force(kN)		Impact Velocity(m/s)	Weight (kg)
			RDmin	RDmax	max	
KESM 25-12	12	0.1	6	11	2	0.3
KESM 35-22	22	0.4	14	27	4	0.7
KESM 40-22	22	0.4	14	27	5	0.8
KESM 50-35	35	1.5	28	60	5	1.9
KESM 60-35	35	1.5	28	60	5	2
KESM 75-45	45	3.5	45	100	5	5
KESM 90-60	60	7	90	150	5	10.5
KESM110-80	80	14	130	230	5	17

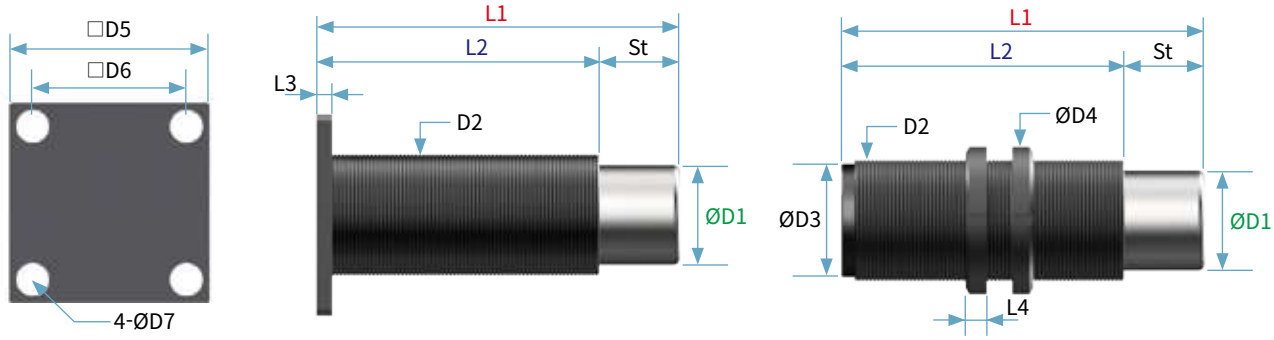

Dimensions (unit : mm)

Model	L1	L2	L3	L4	ØD1	D2	ØD3	ØD4	□D5	□D6	4-ØD7
KESM 25-12	75	53	10	7	19	M25x1.5	20	38	57	41	7
KESM 35-22	120	98	12	8	25	M35x1.5	32	52	80	60	9
KESM 40-22	120	98	12	9	25	M40x1.5	32	58	-	-	-
KESM 50-35	175	140	12	11	38	M50x1.5	45	70	90	70	9
KESM 60-35	175	140	12	11	38	M60x2.0	45	70	-	-	-
KESM 75-45	213	168	10	13	60	M75x2.0	72	98	122	100	11
KESM 90-60	270	210	12	16	74.5	M90x2.0	87	120	150	120	13
KESM110-80	337	257	14	19	90	M110x2.0	107	145	175	143	18

KESE Series

Engineering Data

Model	Stroke (mm) St	Max.Energy / Cycle (kJ) E_T	Dyn. Reaction Force(kN)		Impact Velocity(m/s)	Weight (kg)
			RDmin	RDmax	max	
KESE116-105	105	25	167	310	4	25
KESE142-130	130	50	260	500	4	37
KESE160-140	140	75	400	700	4	45
KESE180-160	160	100	470	820	4	73
KESE215-180	180	150	640	1100	4	117

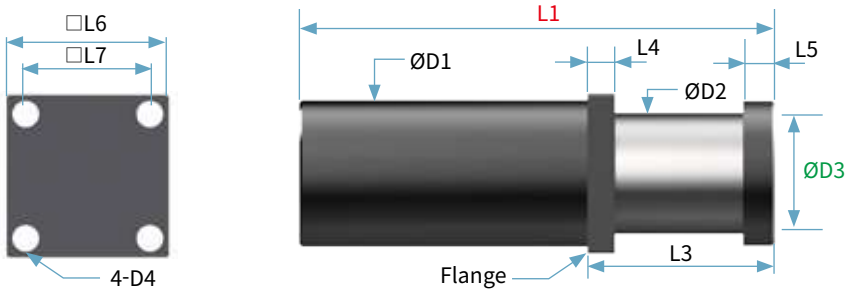

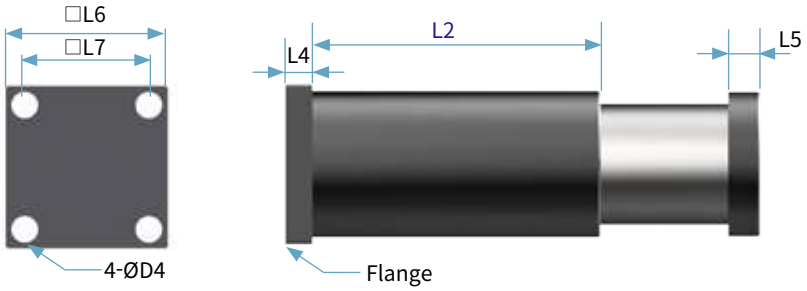

Dimensions (unit : mm)

Model	L1	L2	L3	L4	L5	□L6	□L7	ØD1	ØD2	ØD3	4-ØD4
KESE116-105	415	275	140	20	15	135	105	116	87	120	14
KESE142-130	500	325	175	30	15	155	125	142	117	140	15
KESE160-140	520	315	205	30	35	175	140	160	132	158	18
KESE180-160	585	350	235	35	40	215	170	180	153	185	22
KESE215-180	670	405	265	40	45	250	195	215	182	220	26

KESS Series

Engineering Data

Model	Stroke (mm) St	Max.Energy / Cycle (kJ) E_T	Dyn. Reaction Force(kN)		Impact Velocity(m/s)	Weight (kg)
			RDmin	RDmax	max	
KESS 50-150	150	6	25	50	3	4.2
KESS 75-150	150	12	66	100	3	11
KESS 75-200	200	12	42	78	3	11
KESS 90-200	200	25	95	150	3	20
KESS 90-270	270	25	66	112	3	25
KESS110-275	275	50	118	230	3	40
KESS110-400	400	50	75	150	3	40
KESS110-400H	400	100	175	320	3	65
KESS110-600	600	100	85	230	3	65
KESS110-800	800	150	80	250	3	115

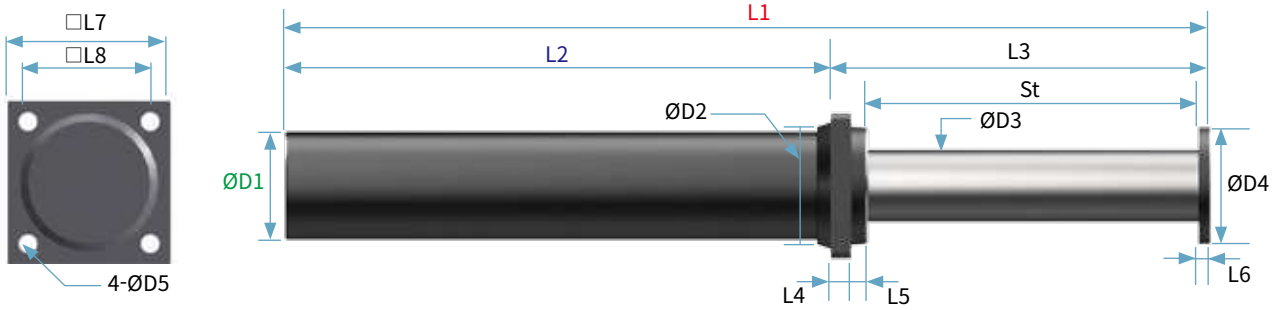

Dimensions (unit : mm)

Model	L1	L2	L3	L4	L5	L6	□L7	□L8	ØD1	ØD2	ØD3	ØD4	4-ØD5
KESS 50-150	410	231	179	19	0	10	90	70	50	90	38	50	9
KESS 75-150	480	285	195	18	15	12	110	85	75	90	57	80	11
KESS 75-200	530	285	245	18	15	12	110	85	75	90	57	80	11
KESS 90-200	620	370	250	20	18	12	135	105	90	110	72	100	14
KESS 90-270	690	370	320	20	18	12	135	105	90	110	72	100	14
KESS110-275	855	520	335	25	20	15	175	140	110	150	87	120	18
KESS110-400	980	520	460	25	20	15	175	140	110	150	87	120	18
KESS110-400H	1,370	910	460	25	20	15	175	140	110	150	87	120	18
KESS110-600	1,570	910	660	25	20	15	175	140	110	150	87	120	18
KESS110-800	2,640	1,780	860	25	20	15	175	140	110	150	87	120	18

KESH Series

Engineering Data

Model	Stroke (mm) St	Max.Energy / Cycle (kJ) E_T	Dyn. Reaction Force(kN)		Impact Velocity(m/s)	Weight (kg)
			RDmin	RDmax	max	
KESH130-400	400	100	190	310	3	63
KESH140-500	500	150	200	380	3	90
KESH140-400H	400	220	380	685	3	100
KESH155-650	650	250	270	490	3	135
KESH175-850	850	400	330	600	3	218
KESH200-1050	1,050	600	370	740	3	295
KESH220-1200	1,200	800	430	860	3	420
KESH230-1300	1,300	1,000	500	1,000	3	470

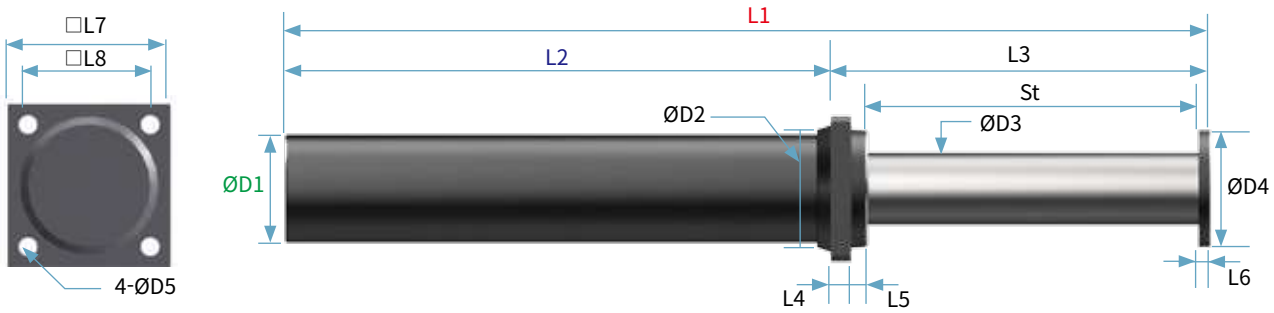

Dimensions (unit : mm)

Model	L1	L2	L3	L4	L5	L6	□L7	□L8	ØD1	ØD2	ØD3	ØD4	4-ØD5
KESH130-400	1,120	660	460	25	20	15	175	140	130	150	110	140	18
KESH140-500	1,350	775	575	30	25	20	215	170	140	185	120	150	22
KESH140-400H	1,258	783	475	30	25	20	215	170	140	185	120	150	22
KESH155-650	1,750	1,025	725	30	25	20	215	170	155	185	135	170	22
KESH175-850	2,185	1,250	935	35	25	25	265	210	175	235	150	190	27
KESH200-1050	2,555	1,420	1,135	35	25	25	265	210	200	235	175	215	27
KESH220-1200	2,935	1,630	1,305	40	35	30	300	240	220	270	190	235	30
KESH230-1300	3,225	1,820	1,405	40	35	30	300	240	230	270	205	248	30

KVD Series Elasto-Fluid Heavy Duty Buffer

KVD Series is developed on behalf of spring or shock absorber by fluid statics' compression principle and even it is simple and robust and that can exert a large damping despite of small appearance. Because KVD Series has spring and shock absorption function in one structure, such return device such as Gas spring and Coil Spring is not needed and has a long lasting feature of damping performance in wide temperature range.

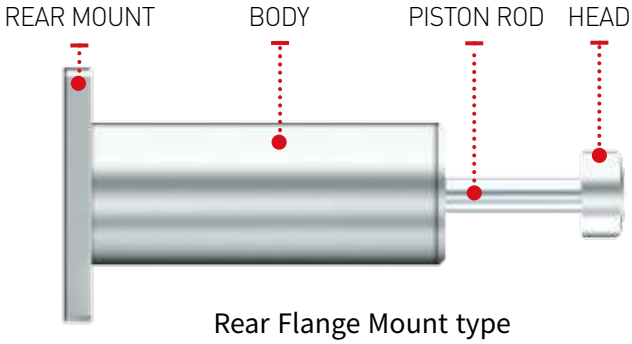

Rear Flange Mount type

Feature

- No need of maintenance for a long time because there is no leakage.
- 700kN up to 1,500kN (Order Made possible)
- Temperature ranges : -20~80°C
- Piston Rod : Hard Chrome (25㎛ or more)
- Impact velocity : 0.02~5m/s
- Bellows and safety cables are optional
- Body Protection : White Zinc Plating
- Special Type - Painting
  - Standard temperature Range : -40°C~120°C

Application

✓ All industries related to Shock absorption and control

KVD Series Ordering Information

KVD 100 - 100 - RS - B C

- Mount Type
- Accessory Series
- C : Safety Cable
- B : Bellows
- RS : Rear Flange Mount
- FS : Front Flange Mount(option)
- Stroke
- Body Dia
- Gum Buffer return type

KVD Series

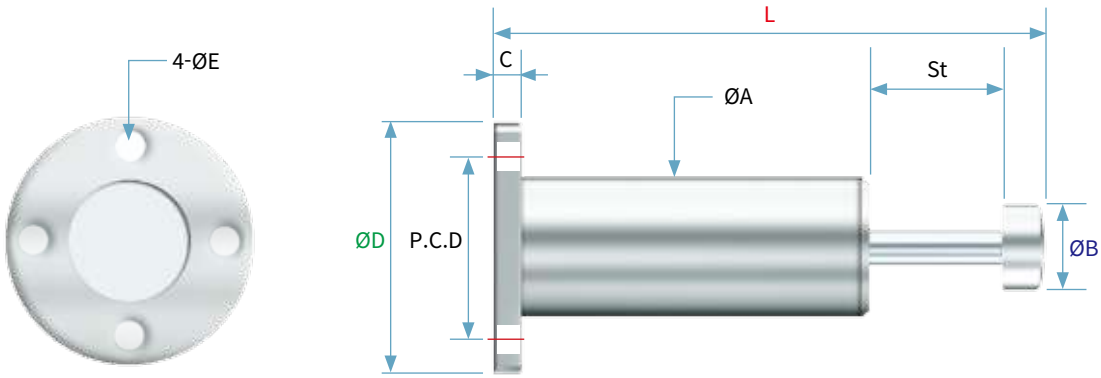

Engineering Data & Dimensions

Model	Stroke (mm) St	Max. Energy /Cycle(kJ)	Max. Dynamic Force(kN)	Preload (kN)	L (mm)	ØA (mm)	ØB (mm)	C (mm)	ØD (mm)	P.C.D (mm)	4-ØE (mm)	Weight (kg)
KVD55- 50	50	3	76	4	220	55	28	12	90	70	4-Ø9	3
KVD100- 50	50	9	236	23	250	100	32	17	155	130	4-Ø18	9
-100	100	18			360							11
KVD130-100	100	33	421	40	385	130	54	28	222	176	4-Ø26	19
-150	150	50			495							20
KVD180-100	100	51	643	88	430	180	58	45	322	251	8-Ø30	46
-200	200	102			650							50
-300	300	154			880							56

Accessory

Bellows Cover

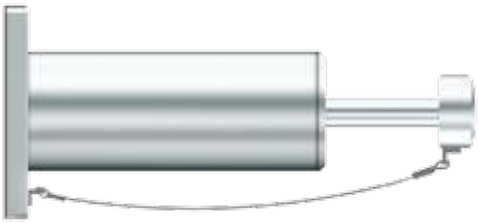

Safety Cable

KRC Series Rate Controls

KRC Series is designed for speed control of transfer equipment to both or single side compression and tension. The machine can be controlled for soft and safe movement according to user's environment by controlling specific dial range 0 ~12 steps.

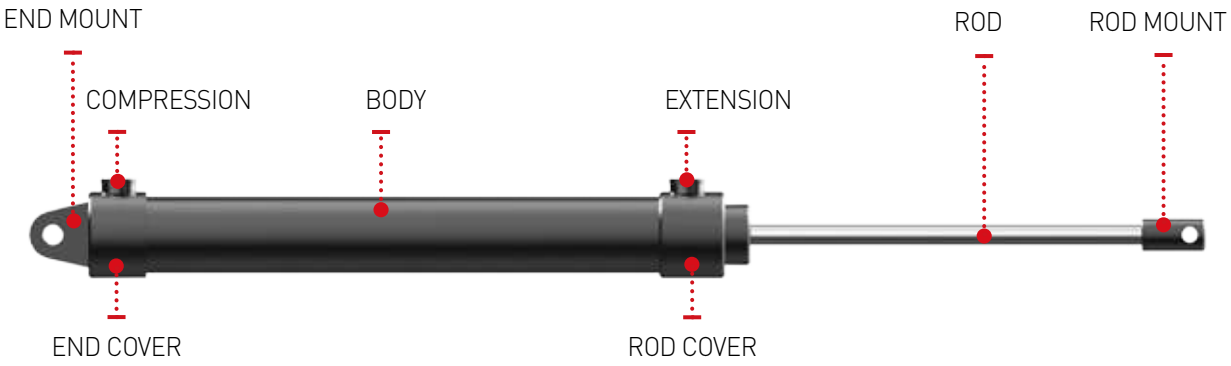

Feature

- Impact velocity : 0.06m/s
- Temperature ranges : Standard (-10~80°C), Special (-30~100°C)
- Piston Rod : Hard Chrome (25㎛ or more)
- Body and Mount : Black Plating(Anodizing)
- Applied fluid : Oil

KRC Series Ordering Information

KRC 30 - 50 - E

- E: Direction : E(Expansion) / C(Compression) / EC(Expansion&Compression)
- 50: Stroke
- 30: Body Dia
- KRC: Series

KRC30 Series

Engineering Data & Dimensions

Model	Stroke (mm) St	Max. Propelling Force(N)		Weight (g)	Dimensions (m/m)			Direction
		Ext	Comp		A	B	C	
KRC30-50	50	3,000	3,000	310	250	200	176	E,C,E&C
-100	100	3,000	2,600	380	350	250	226	E,C,E&C
-150	150	3,000	2,100	450	450	300	276	E,C,E&C
-200	200	3,000	1,400	530	550	350	326	E,C,E&C
-250	250	3,000	800	600	650	400	376	E,C,E&C

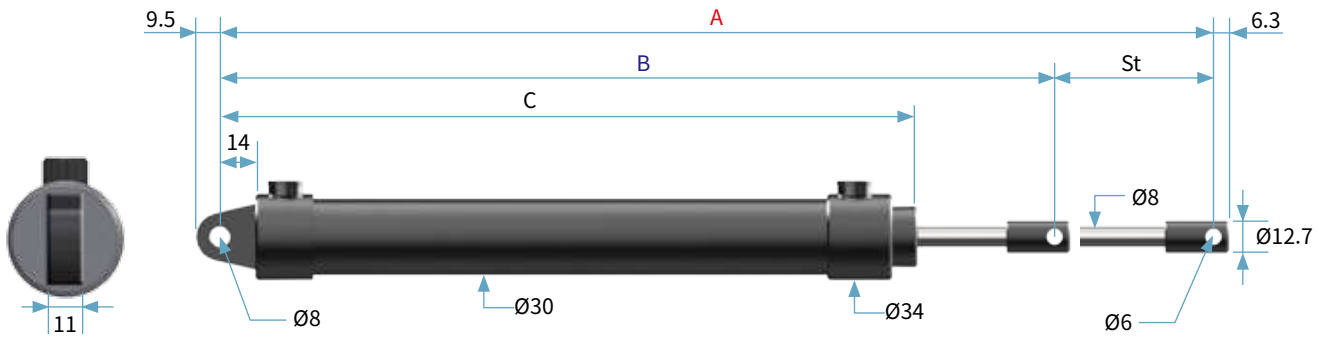

Adjustment Diagram

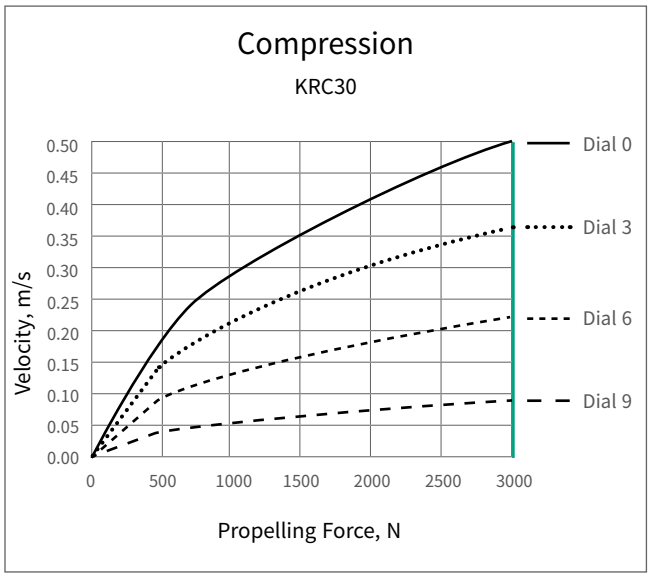

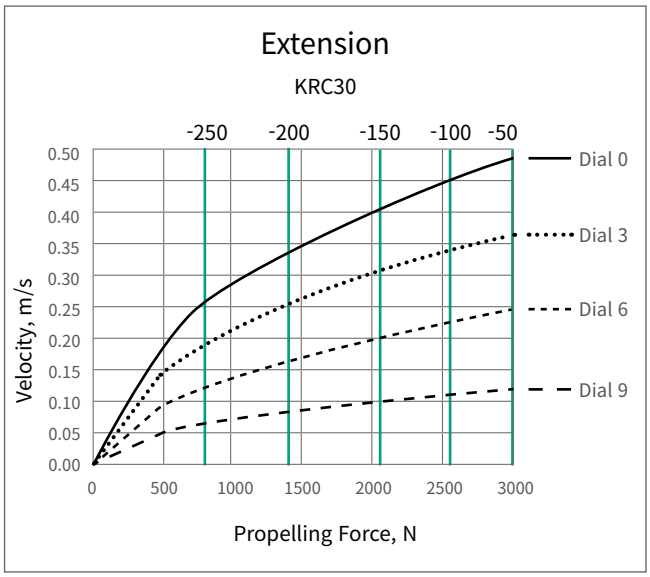

KRC50 Series

Engineering Data & Dimensions

Model	Stroke (mm) St	Max. Propelling Force(N)		Weight (g)	Dimensions (m/m)			Direction
		Ext	Comp		A	B	C	
KRC50-50	50	11,000	11,000	2,000	250	200	175	E,C,E&C
-100	100	11,000	11,000	2,500	350	250	225	E,C,E&C
-150	150	11,000	11,000	3,000	450	300	275	E,C,E&C
-200	200	11,000	11,000	3,300	550	350	325	E,C,E&C
-250	250	11,000	11,000	3,600	650	400	375	E,C,E&C

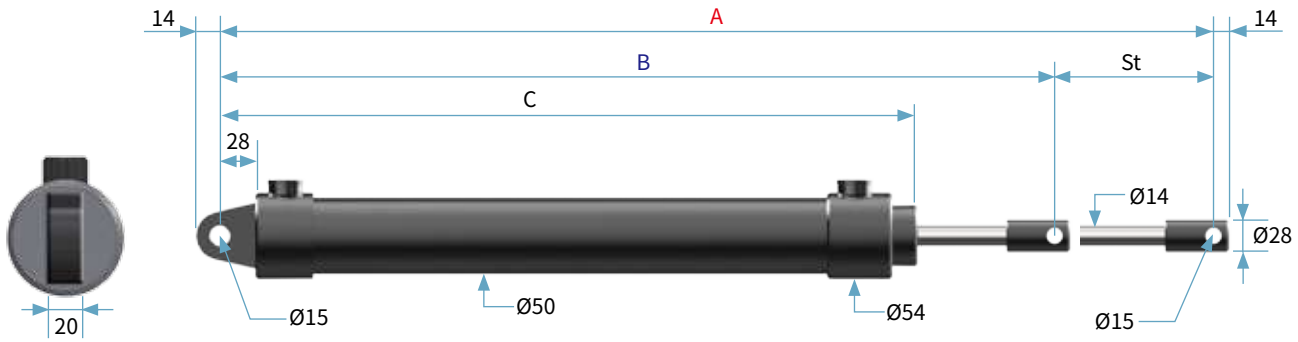

Adjustment Diagram

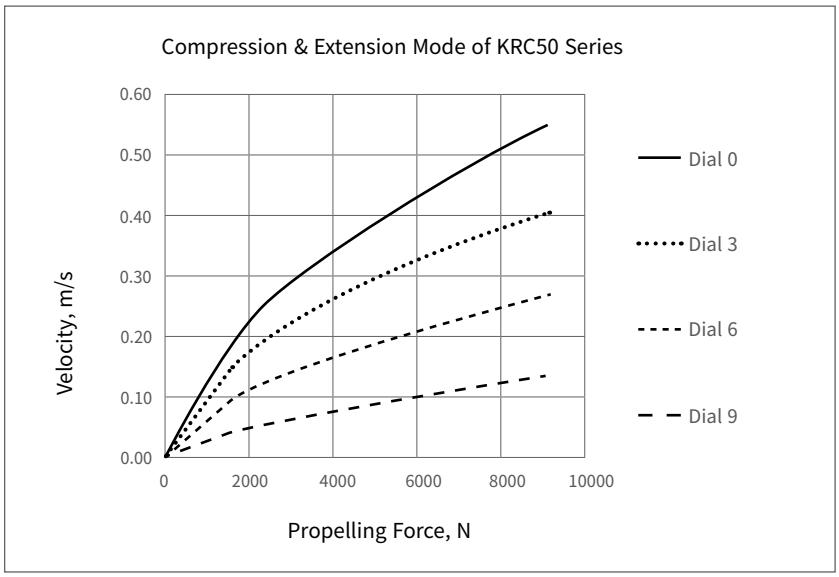

KRC70 Series

Engineering Data & Dimensions

Model	Stroke (mm) St	Max. Propelling Force(N)		Weight (g)	Dimensions (mm)		Direction
		Ext	Comp		A	B	
KRC70-50	50	20,500	20,500	1,700	237	180	E,C,E&C
-100	100	20,500	20,500	2,100	339	231	E,C,E&C
-150	150	20,500	20,500	2,400	441	282	E,C,E&C
-200	200	20,500	20,500	2,700	541	332	E,C,E&C
-250	250	20,500	20,500	3,000	643	383	E,C,E&C
-300	300	20,500	20,500	3,300	745	434	E,C,E&C
-350	350	20,500	20,500	3,700	847	485	E,C,E&C

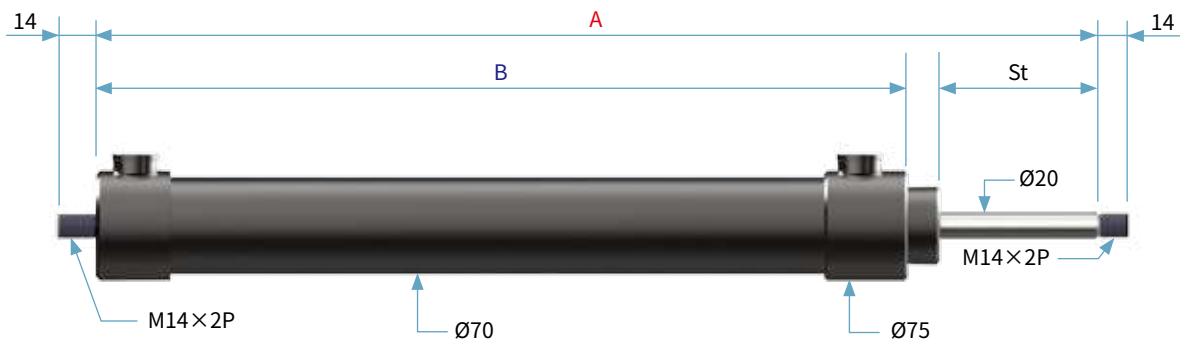

Adjustment Diagram

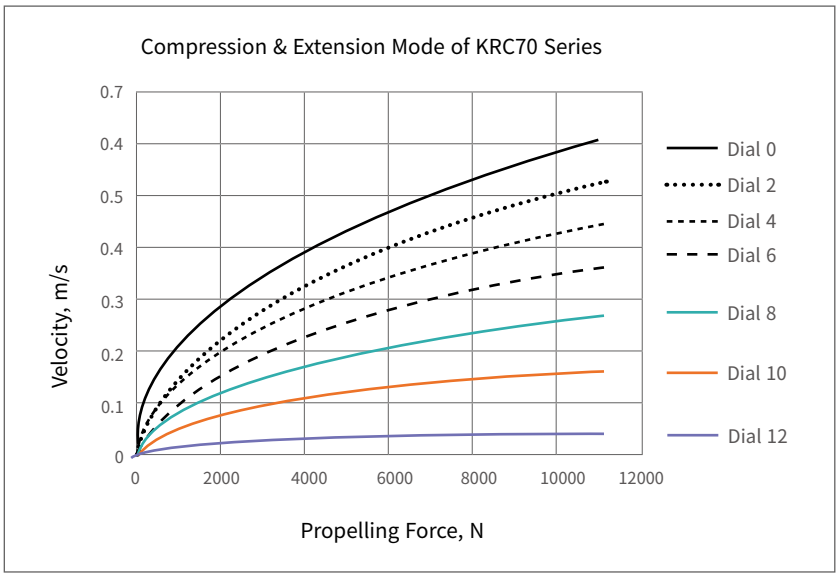

Rate Controls

KHC Series Hydro Check

Feature

- Hydro Check Series enables precise speed and location control for the moving loads with various strokes
- Hydro Check Series is easy to be installed and controlled, and extend life span because precise transfer is possible by specific control of adjustment knob(to 300°). It is used for auto feed drilling, grinder, cutting, etc
- Piston Rod is made of corrosion proof material and plated body protect damage by working environment
- Easy installment is possible by the accessories of snap ring and mounting block, and location movement and fixation is convenient
- Oil inside of hydro check is self-filtered, so constant speed control is possible and convenient in any working circumstance
- Temperature ranges : Standard (-10~80°C), Special (-30~100°C)
- Applied fluid : Oil

Application

✓ Places where speed control is needed, like drilling, cutting, safety equipment, boring machine, etc

KHC Series Ordering Information

KHC 24 - 15 - S - SO

- SO : Customer Product
- S : Step Check unit
- Stroke
- Body Dia
- Series

KHC24 Series

Engineering Data & Dimensions

Model	Stroke (mm) St	Dimensionds(mm)			Max Load Angle From Axis	Speed Adjustment Range		Weight (g)
		A	B	C		Load Limits (N)	Feed Rate Limits(mm/s)	
KHC24 - 15	15	157.5	21		1.2°			385
-30	30	202.5	19		1°			450
-60	60	312.5	16	26	0.5°	100~2,500	0.2~30	635
-90	90	382.5	16		0.3°			745
-120	120	472.5	16		0.2°			885

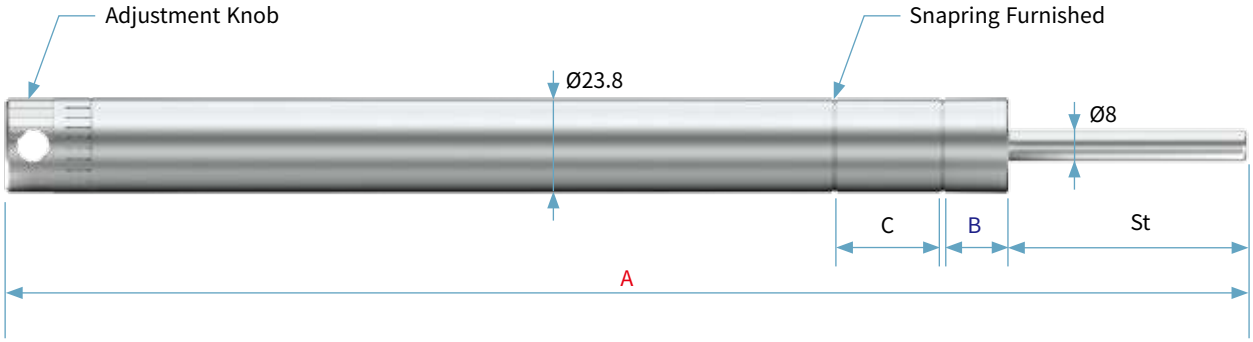

Mount Block

MB 24

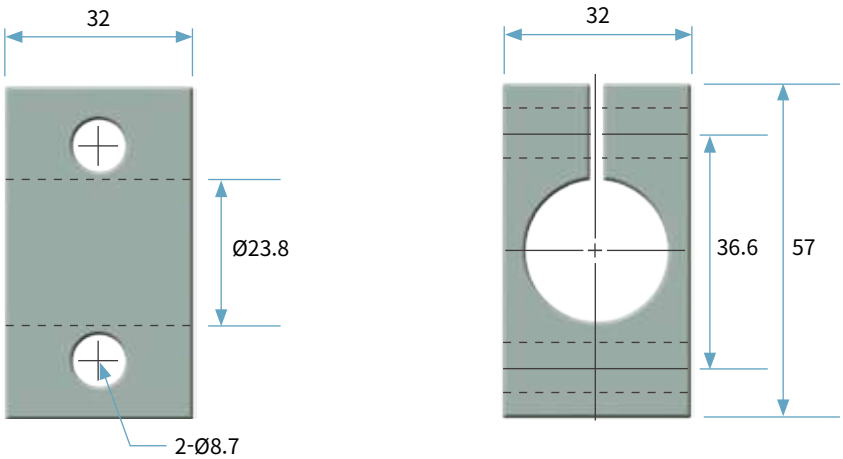

Rate Controls

KHC31,38 Series

Engineering Data & Dimensions

Model	Stroke (mm) St	Dimensionds(mm)				Max Load Angle From Axis	Speed Adjustment Range		Weight (g)
		A	B	C	D		Load Limits (N)	Feed Rate Limits(mm/s)	
KHC31-40	40	270	230	31	12	1°	450 -3,500	0.2-30	1,040
-60	60	340	279			0.5°			1,245
-100	100	476	375			0.3°			1,655
KHC38-60	60	321	261	38	14	0.5°	1,500 -5,000	0.3-30	2,490
-100	100	454	354			0.3°			3,310

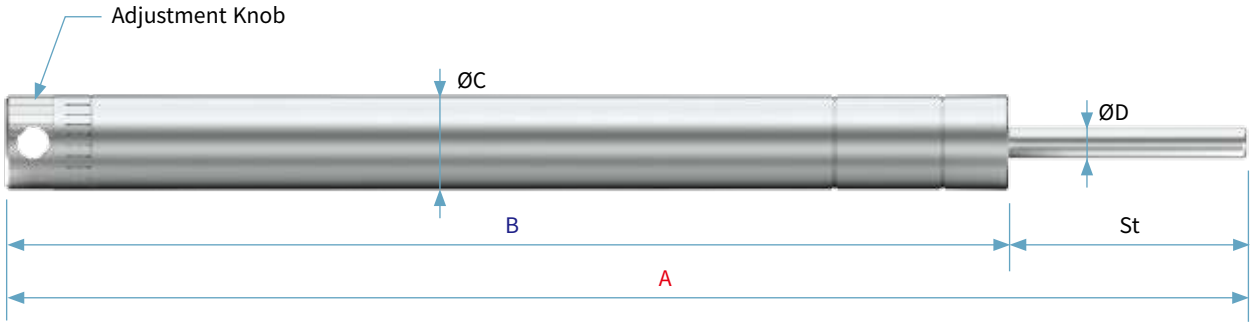

Mount Block

MB 31

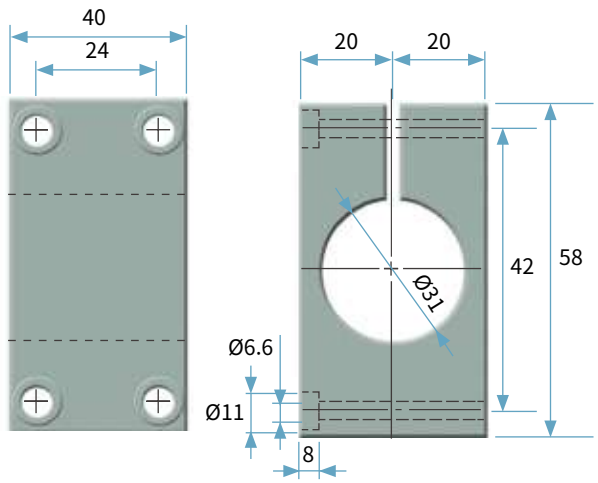

MB 38

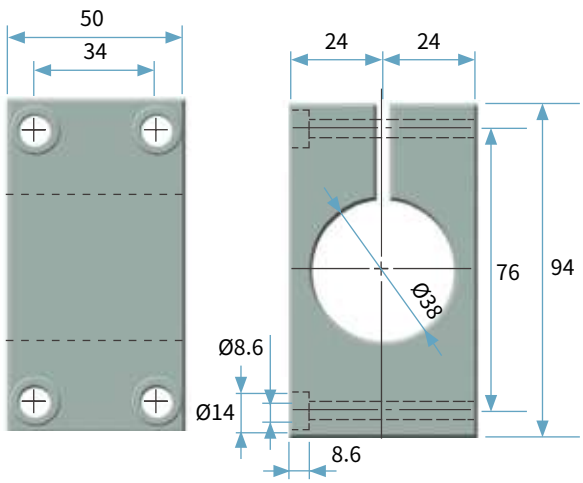

Step Check Unit Series

Step Check Unit Series has same speed control function with Hydro Check but it has different function of middle stop as required. It is used in long drilling work, precision work, chips discharge work during operation. Customized order for special requirement is possible.

Engineering Data & Dimensions

Model	Stroke (mm) St	A (mm)	B (mm)	C (mm)	ØD (mm)	ØE (mm)	ØF (mm)	Return Type	Weight (g)
KHC24-30S	30	224.5	22	35	8	23.8	32	Air Return	500
-60S	60	332.5							685
-90S	90	404.5							795
-120S	120	494.5							935

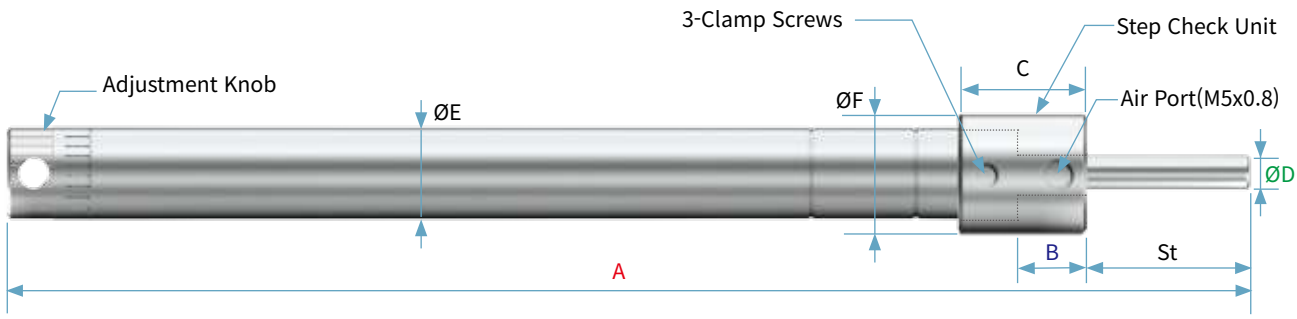

Hydro Check Installation

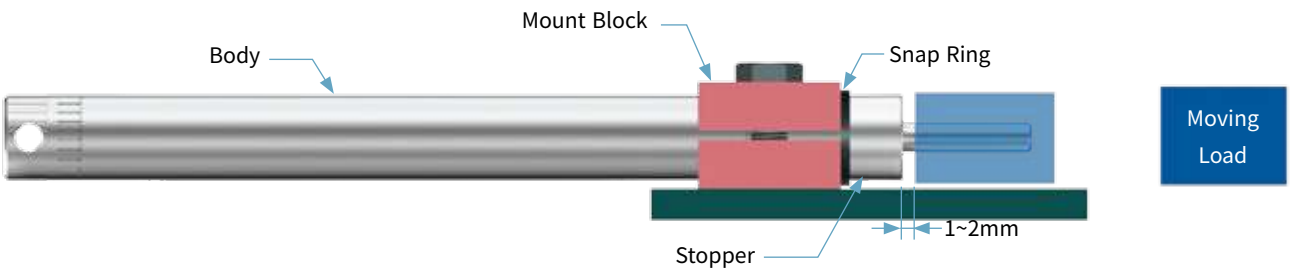

Mount Block installation can be applied to high driving force and Snap Ring prevent products moving

Cautions

1. Don't lock by bolt and don't have machining hydro check's body(contact us if it is needed).
2. Refer to catalog for the installment angle of hydro check. If instalment location is not proper, uneven wear can be occurred and may cause shorten life span and damage on the products.

KG Series Compression Type

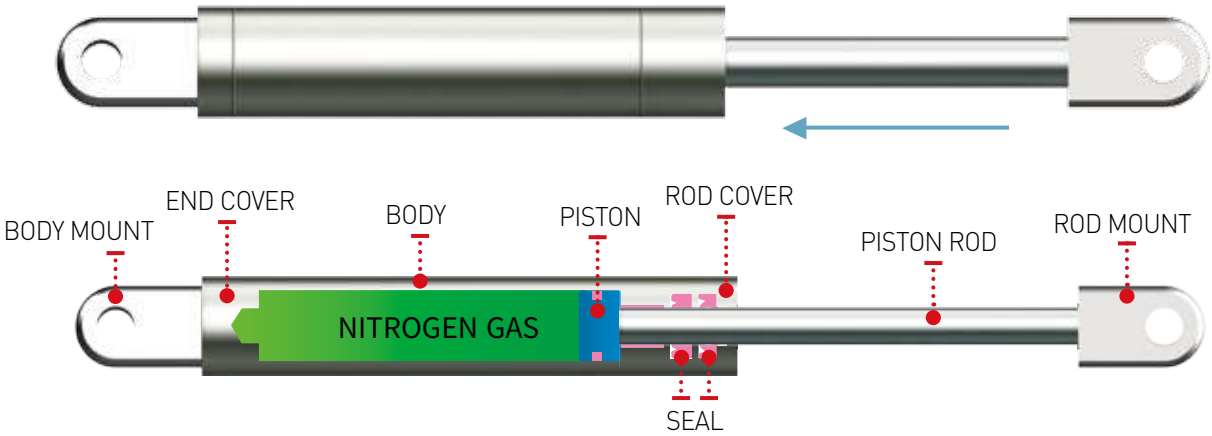

Feature

- KG series is used of high pressure nitrogen gas and has extensive spring feature, long stroke, small repulsive force, lifting big loads despite of small unit, speed control in compression status, and strong features of various applications. It has stable force comparing to general plate spring and coil spring.
- Temperature ranges : Standard (-10~60°C), Special (-30~100°C)
- Order made is possible according to size, stroke, force, material(stainless steel), etc.

Application

✓ Mechanical Machine Cover, Auxiliary Power Unit, Manhole Cover, Machinery, Medical Device, etc.

KG Series Ordering Information

KG 30 - 100 - H H - 100N - 268

- Installation distance
- Nominal Force
- Body Mount Type
- Rod Mount Type
- Stroke
- Body Dia
- Series

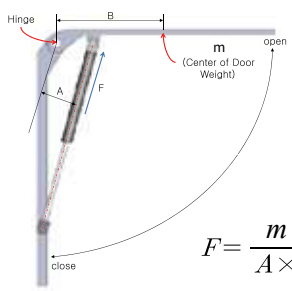

To get smooth operation of gas spring, please install it like above picture (Body of gas spring should be located upward)

$$F = \frac{m \times g \times B}{A \times n \times 0.95} (N)$$

F : Spring Force(N)
W : Door Weight(kg)
A : Vertical distance from Hinge to Gas Spring(m)
B : Distance from Hinge to the center of gravity(m)
n : Number of Gas Spring
g : Acceleration of gravity(9.8m/s^2)

KG15, 18, 22, 30 Series

Type	Rod Mounting	Piston Rod	Body	Body Mounting

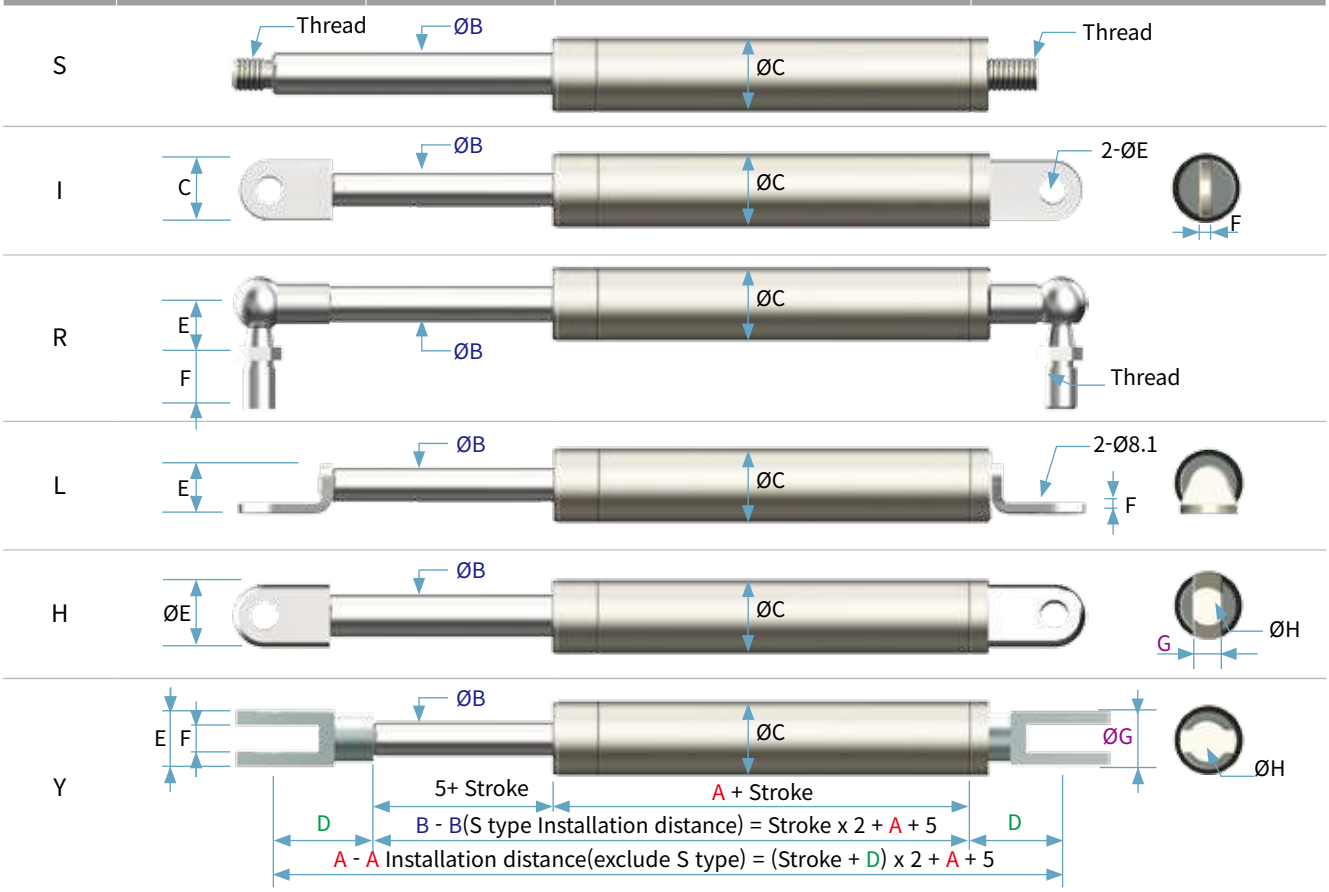

Dimensions (unit : mm)

Model	Max Stroke	A	ØB	ØC	Mount Type	D	E	F	G	H	Thread	Max Force(N)
KG15	200	35	6	15	S	8	-	-	-	-	M6X1.0	Below 300
					I	13	8.1	3.2	-	-	-	
					R	20	13	12.5	-	-	M6X1.0	
					L	15	9	3.2	-	-	-	
KG18	250	40	8	18	S	10	-	-	-	-	M8X1.25	Below 600
					I	19	8.1	4.0	-	-	-	
					R	22	18	14	-	-	M8X1.25	
					L	15	9	3.2	-	-	-	
					H	19	Ø18	-	10	8.1	-	
					Y	32	16	8	Ø18	8.1	-	
KG22	300	60	10	22	S	10	-	-	-	-	M10X1.5	Below 900
					I	19	8.1	4.0	-	-	-	
					R	22	18	14	-	-	M10X1.5	
					L	15	11	3.2	-	-	-	
					H	19	Ø18	-	10	8.1	-	
					Y	32	16	8	Ø18	8.1	-	
KG30	350	60	16	30	S	18	-	-	-	-	M14X2.0	Below 1,200
					R	57	21.5	42.5	-	-	M14X2.0	
					H	35	30	-	20	15	-	

KG35, 40, 50, 75, 100 Series

Type	Rod Mounting	Piston Rod	Body	Body Mounting

S

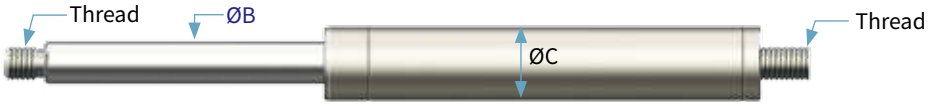

R

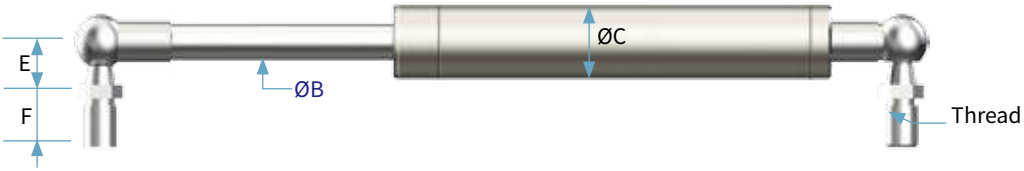

H

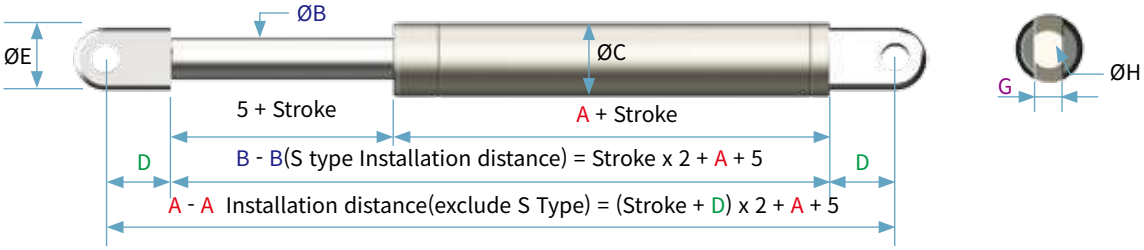

Dimensions (unit : mm)

Model	Max Stroke	A	ØB	ØC	Mount Type	D	E	F	G	H	Thread	Max Force(N)
KG35	400	70	20	35	S	22	-	-	-	-	M16X1.5	2,000이하
					R	64	23.5	43	-	-	M16X1.5	
					H	35	Ø30	-	20	15	-	
KG40	500	70	20	40	S	25	-	-	-	-	M18X1.5	3,000이하
					R	71	28	42	-	-	M18X1.5	
					H	40	Ø35	-	28	16	-	
KG50	700	80	25	50	S	30	-	-	-	-	M20X1.5	5,000이하
					R	78	27	43	-	-	M20X1.5	
					H	50	Ø40	-	34	20	-	
KG75	1,000	140	35	75	S	35	-	-	-	-	M24X2.0	8,000이하
					R	94	30	51	-	-	M24X2.0	
					H	70	Ø60	-	40	30	-	
KG100	1,300	170	40	100	S	35	-	-	-	-	M30X2.0	12,000이하
					R	110	35	56	-	-	M30X2.0	
					H	75	Ø70	-	50	35	-	

KGP Series Extension Type

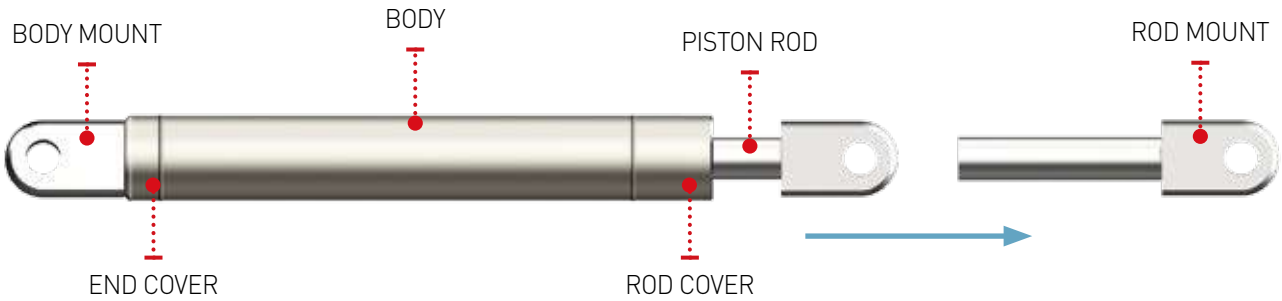

Feature

- KGP is pull type gas spring. It is widely used for the open/close cover of machine, and the open/close cover of tank container which is horizontally moving. And it is used on semiconductor equipments.
- Temperature ranges : Standard (-10~60°C), Special (-30~100°C)
- Order made is possible according to size, stroke, force, material(stainless steel), etc.

Application

✓ Mechanical Machine Cover, Auxiliary Power Unit, Manhole Cover, Machinery, Medical Device, etc.

KGP Series Ordering Information

KGP 30 - 100 - H H - 100N - 268

- 268 — Installation distance
- 100N — Nominal Force
- H — Body Mount Type
- H — Rod Mount Type
- 100 — Stroke
- 30 — Body Dia
- KGP — Series

KGP22, 30, 35, 40, 50, 75 Series

Type	Rod Mounting	Piston Rod	Body	Body Mounting

S

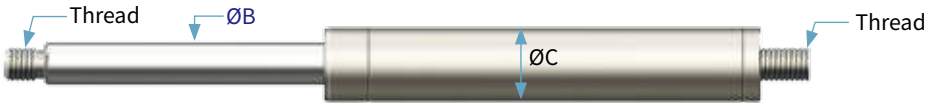

R

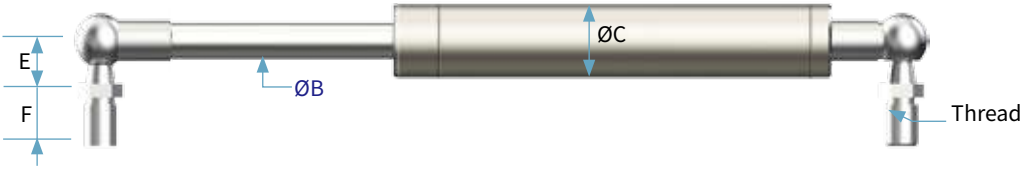

H

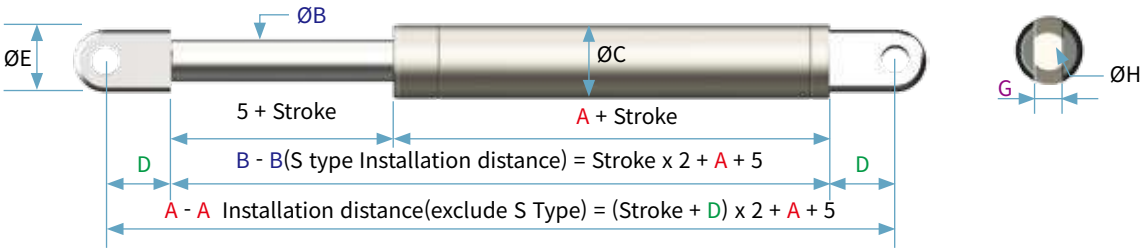

Dimensions (unit : mm)

Model	Max Stroke	A	ØB	ØC	Mount Type	D	E	F	G	H	Thread	Max Force(N)
KGP22	300	80	10	22	S	10	-	-	-	-	M8X1.25	200이하
					R	22	18	14	-	-	M10X1.5	
					H	19	Ø22	-	10	10.1	-	
KGP30	350	90	12	30	S	18	-	-	-	-	M10X1.5	900이하
					R	43	17	25	-	-		
					H	35	Ø30	-	20	15	-	
KGP35	400	125	14	35	S	22	-	-	-	-	M12X1.75	1,200이하
					R	50	19	30	-	-		
					H	35	Ø30	-	20	15	-	
KGP40	500	130	16	40	S	25	-	-	-	-	M14X2	1,500이하
					R	57	21.5	42.5	-	-		
					H	40	Ø35	-	28	16	-	
KGP50	700	130	25	50	S	35	-	-	-	-	M20X1.5	2,000이하
					R	78	27	43	-	-		
					H	50	Ø50	-	34	20	-	
KGP75	1,000	130	25	75	S	41	-	-	-	-	M24X2.0	3,000이하
					R	94	30	51	-	-		
					H	70	Ø60	-	40	30	-	

KGL Series Free Lock Type

Feature

- Free Lock Gas Spring series has all merits of general Gas Spring. KGL Series have a free lock function that operators can decide a stroke at wanted location where operators want to install. Order made is possible according to size, stroke, force, material, etc.
- Temperature ranges : Standard (-10~80°C), Special (-30~100°C)
- Order made is possible according to size, stroke, force, material, etc.

Application

✓ It is used for a variety of purposes such as doors, auxiliary power device, chairs, medical equipment, and covers.

KGL Series Ordering Information

KGL 28 - 50 - 200N - SO

- SO : Customer Product
- Speed Force
- Stroke
- Body Dia
- Free Lock Gas Spring Series

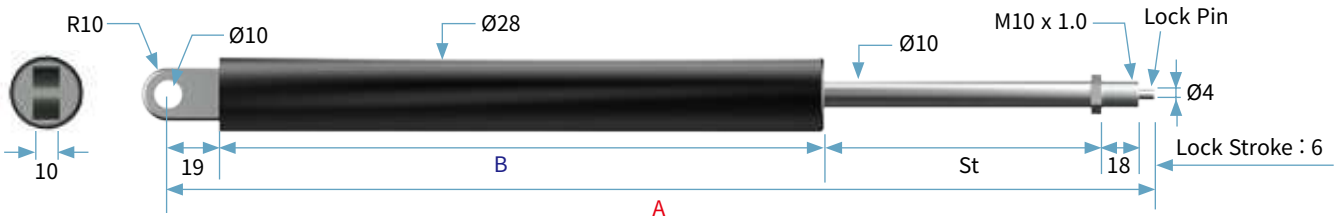

Dimensions (unit : mm)

Model	Stroke (mm) St	A	B	Force(N)
KGL 28-50	50	250	157	100~1,300
-80	80	330	207	
-100	100	370	227	
-150	150	470	277	
-200	200	550	307	

At a glance

Adjustable Type Shock Absorbers : KMA Series

Model	Stroke (mm) St	Max.Energy / Cycle (Nm) E_T	Max.Energy / Hour (Nm/h) E_TC	Effective Weight (kg) m_e	Recoil Force (N)		Weight (g)	Thread
					Ext	Comp		
KMA10-07	7	5.5	15,000	1-123	2.4	5.4	21	M10X1.0
KMA12-14	14	21.5	35,000	4-477	3.7	9.6	33	M12X1.0
KMA14-12	12	21.5	45,000	1.5-494	3.6	9.8	55	M14X1.5
-12LV				25.4-1,650				
KMA16-12	12	27	51,000	2-527	4.9	11.4	80	M16X1.5
-12LV				31.9-3,375				
KMA20-16	16	61	63,000	4.5-1,230	8	19.6	145	M20X1.5
-16LV				72.1-5,600				
KMA25-25	25	177	113,000	8.3-2,150	10.2	29.5	285	M25X1.5
-25LV				209.4-15,750				
KMA27-25(F)	25	177	113,000	8.3-2,150	10.2	29.5	305	M27X1.5(F) M27X3.0
-25(F)LV				209.4-15,750				
KMA27-40	40	283	149,000	20-5,120	10	31	429	M27X2.0
-40LV				334.9-25,200				
KMA30-35	35	356	137,000	25-6,950	17.8	50.3	610	M30X1.5
KMA33-25	25	314	120,000	25-6,980	17.5	48.8	454	M33X1.5
-25LV				97-60,930				
KMA33-50	50	628	150,000	50-14,000	13.6	65.3	580	M33X1.5
-50LV				192-120,312				
KMA36-25	25	346	125,000	25-6,980	25	56.2	725	M36X1.5
-25LV				97-60,930				
KMA36-50	50	692	160,000	50-14,000	22.5	60	885	M36X1.5
-50LV				192-120,312				

At a glance

Self-compensating Shock Absorbers : KMS Series

Model	Stroke (mm) St	Max.Energy / Cycle (Nm) E_T	Max.Energy / Hour (Nm/h) E_TC	Effective Weight (kg) m_e			Recoil Force (N)		Weight (g)	Thread
				1	2	3	Ext	Comp		
KMS04-04	4	0.4	1,500	0.1-1.0	0.9-3.2	-	2	7	2.5	M4X0.5
KMS05-05	5	0.6	1,800	0.1-1.2	1.0-5.0	-	2	7	2.5	M5X0.5
KMS06-05	5	1	2,500	0.05-1	0.8-2.8	15-4	2	5	4.0	M6X0.5
KMS08-06	6	5	8,000	0.8-2.8	2.5-12.3	10-111	2.2	5.8	10	M8X1.0
KMS10-08	8	11	14,500	1.8-6.1	5.5-27	22-244	2.5	6.9	15.5	M10X1.0
KMS12-10	10	18	34,000	2.9-10	9-44	36-400	3.7	9.6	23	M12X1.0
KMS14-15(F)	15	34	51,000	5-18	17-84	68-755	3.8	13.3	43	M14X1.0(F) M14X1.5
KMS20-20	20	105	55,000	13-39	36-210	173-2,333	8.2	23	140	M20X1.5
KMS25-25(F)	25	226	69,000	28-85	78-452	373-5,022	11	29	265	M25X1.5(F) M25X2.0
KMS36-25	25	490	115,000	61-185	170-500	435-10,888	25	64.3	758	M36X1.5
LONG STROKE TYPE										
KMS14-20	20	13	45,500	2-7	6.5-32	26-288	3.6	13.9	71	M14X1.0
KMS20-30	30	52	31,100	8.5-28	26-128	104-1,155	6.3	16.8	188	M20X1.5
-50	50	82	37,800	13-45	41-202	164-1,822	7.8	16.6	268.6	
KMS25-40	40	110	94,000	18-60	55-271	220-2,444	13.7	30.9	342.5	M25X2.0
-50	50	120	41,000	19-66	60-296	240-2,666	13.9	30.5	457.5	
-80	80	160	54,200	26-88	80-395	320-3,555	14.9	29.8	577.5	
KMS36-50	50	220	162,000	35-121	110-543	440-4,888	24.4	44.6	994	M36X1.5
-80	80	340	232,800	55-188	170-839	680-7,555	25.4	45.6	1,280	

At a glance

Adjustable Type Shock Absorbers : KSA Series

Model	Stroke (mm) St	Max.Energy / Cycle (Nm) E_T	Max.Energy / Hour (Nm/h) E_TC	Effective Weight (kg) m_e	Recoil Force (N)		Weight (kg)	Thread
					Ext	Comp		
KSA45-25	25	650	195,000	50-13,354	49.7	82.8	1.13	M45X1.5
-50	50	1,300	260,000	99-26,700	45.6	84	1.3	
-75	75	2,000	300,000	148-39,060	44.3	86.3	1.52	
KSA64-25	25	1,250	152,000	92-24,400	61.8	110	2.9	M64X2.0
-50	50	2,500	248,000	185-48,800	60.8	133.2	3.3	
-75	75	3,750	265,000	277-73,240	61.4	148.3	3.8	
-100	100	5,000	360,000	370-97,650	59.4	160.1	4	
-125	125	6,250	413,000	462-122,000	57.1	160.4	7.7	
-150	150	7,500	450,000	555-146,480	51	166.8	8.9	
KSA85-25	25	2,000	330,000	148-39,600	132	245.8	12.2	M85X2.0
-50	50	4,000	462,000	296-78,100	131.6	271.7	14.4	
-75	75	6,000	680,000	444-117,200	130	325.1	17	
-100	100	8,000	825,000	591-156,300	125.4	327.7	20	
-125	125	10,000	859,000	740-195,300	126.6	343.3	23.6	
-150	150	12,000	901,000	930-220,300	126.6	386.7	28	

At a glance

Adjustable Type Shock Absorbers : KHA Series

Model	Stroke (mm) St	Max.Energy / Cycle (Nm) E_T	Max.Energy / Hour (Nm/h) E_TC	Effective Weight (kg) m_e	Recoil Force (N)		Weight (kg)	Thread
					Ext	Comp		
KHA42-25	25	250	125,000	36-3,600	28	56	1.25	M42X1.5
-25LV				295-52,000				
-50	50	500	166,000	45-6,150	38	86	1.4	
-50LV				591-104,000				
-75	75	750	200,000	54-9,500	32	88	1.6	
-75LV				887-156,000				
KHA64-50	50	1,300	270,000	82-12,600	65	148	3.7	M64x2.0
-50LV				4,062-277,500				
-100	100	2,600	360,000	115-17,000	45	157	4.5	
-100LV				8,125-555,000				
-150	150	3,900	420,000	140-22,000	47	199	5.3	
-150LV				12,187-832,500				
KHA85-50	50	2,300	370,000	200-37,000	148	315	6.4	M85X2.0
-90	90	4,000	650,000	230-40,000	121	365	7.6	
-125	125	5,700	930,000	300-43,000	114	365	8.6	
-165	165	7,300	1,210,000	360-45,000	98	429	9.8	
KHA115-50	50	3,700	1,501,000	370-44,000	187	427	16	M115x2.0
-100	100	7,400	1,805,000	370-57,000	178	482	19	
-150	150	11,100	2,100,000	370-89,000	185	538	21	
-200	200	14,800	2,405,000	390-118,000	185	665	31	
-250	250	18,500	2,710,000	440-145,000	184	649	34	

At a glance

Hydro-Pneumatic Buffers : KHG Series

Model	Stroke (mm) St	Max.Energy / Cycle (kJ) E_T	Max Buffer Force (kN) F_S	Recoil Force (kN)		Max Side Load Angle(°)		Weight (kg)
				Ext	Comp	R Type	F Type	
KHG65-25	25	2	100	1.0	3.2	3.5	3.5	6
-50	50	4	100		4.7	3.5	3.5	7
-75	75	6	100		5.3	3	3	8
-100	100	8	100		6.6	3	3	9
-125	125	10	100		6.6	2.5	2.5	9
-150	150	12	100		6.6	2	2	10
-200	200	16	100		9	2	2	11
KHG85-50	50	8	200	1.5	10	4	3.5	10
-100	100	16	200		13	3	3	13
-150	150	24	200		17	2	2	15
-200	200	32	200		19	1.8	1.5	17
-250	250	40	200		20	1.5	1.2	19
KHG100-50	50	11	280	2.4	16	5	4	17
-80	80	18	280		16	4.5	4	19
-100	100	23	280		16	5	4	20
-120	120	27	280		20	4.5	3.5	22
-150	150	34	280		20	4.5	3.5	23
-200	200	46	280		20	4	3	26
-250	250	58	280		25	3.5	2.5	30
-300	300	69	280		25	3	2	34
-400	400	90	280		25	2.5	2	43
-500	500	110	275		25	2.5	2	53
-600	600	125	260		25	2	1.5	60
-800	800	140	210		25	2	1.5	73
KHG120-100	100	45	570	3.5	38	4	4.5	34
-150	150	70	570		38	4	3.5	39
-200	200	92	570		38	3.5	3.5	45
-250	250	114	570		40	3	3	50
-300	300	130	450		40	3	2.5	58
-400	400	160	450		40	2.5	2	66
-500	500	180	450		40	2	1.5	82
-600	600	200	450		40	2	1.5	94
-800	800	240	375		40	2	1.3	112
-1000	1,000	280	350		40	2	1.3	134

At a glance

Hydro-Pneumatic Buffers : KHG Series

Model	Stroke (mm) St	Max.Energy / Cycle (kJ) E_T	Max Buffer Force (kN) F_S	Recoil Force (kN)		Max Side Load Angle(°)		Weight (kg)
				Ext	Comp	R Type	F Type	
KHG130-250	250	120	550	4.5	40	4.5	4	62
-300	300	140	550		40	4.5	4	68
-400	400	180	550		50	4	3.5	79
-500	500	220	550		50	3.5	3.5	93
-600	600	260	550		50	2	1.5	107
-800	800	300	460		50	2	1.5	129
KHG140-100	100	62	760	5.5	38	4.5	4	49
-150	150	91	760		65	4.5	4	55
-200	200	124	730		70	4	3.5	62
-300	300	175	730		70	3.5	2.5	74
-400	400	234	730		78	2.5	1.5	76
-500	500	270	680		78	2	1.3	98
-600	600	300	630		78	2	1.3	111
-800	800	325	510		78	2	1.3	138
-1000	1,000	360	450		78	1.6	1.2	163
KHG150-100	100	70	880	6.2	45	4	4.5	57
-200	200	136	850		75	4	3.5	71
-300	300	183	770		75	3.5	3.5	85
-400	400	243	760		75	3	3	93
-500	500	285	710		85	3	2.5	113
-600	600	323	670		85	2.5	2	127
-800	800	367	580		85	2	1.5	150
-1000	1,000	410	510		85	2	1.5	176
KHG180-100	100	80	980	8	75	4.5	4	87
-200	200	160	980		80	4.5	4	105
-250	250	200	980		80	4.5	4	110
-400	400	280	880		90	4.5	4	165
-500	500	350	880		100	4	3.5	185
-600	600	430	890		100	3.5	3	206
-800	800	570	890		100	3	2.5	248
-1000	1,000	720	890		110	2.5	2	287

At a glance

Hydraulic Buffers : KHS Series

Model	Stroke (mm) St	Max Energy / Cycle (kJ) E_T	Max Buffer Force (kN) F_S	Recoil Force(N)		Max Side Load Angle(°)	Weight (kg)
				Ext	Comp		
KHS64-50	50	0.5	12.5	6.5	14.8	3	3
KHS90-50	50	4	100	14.2	30.5	3	6
75	75	6	100	10.5	19	3	7
-100	100	8	100	9.9	42	3	8
KHS100-50	50	4.4	110	14.2	30.5	3	6
-100	100	8.8	110	9.9	42	3	8
KHS130-70	70	10	179	18.2	42.5	3	14
-100	100	15	188	17.8	48	3	16
-150	150	21	175	18.3	53.5	2.5	20
KHS170-80	80	22	340	18.2	44.3	3	27
-150	150	41	340	18.3	53.5	2	36
KHS190-100	100	40	500	17.8	48	2.5	40
-150	150	60	500	18.3	53.5	2	47
KHS220-100	100	44	550	40.5	134	2.5	49
-150	150	66	550	41.8	131	2	57
KHS250-100	100	60	750	38.5	111.2	2.5	73
-150	150	90	750	34.2	107.5	2	96
-200	200	120	750	33	105	2	108
-300	300	180	750	38	121.8	2	117
KHS300-150	150	117	975	46	142	2	139
-250	250	180	1,125	45	151	1.5	170
KHS340-200	200	200	1,250	51	162	1.5	208
-300	300	300	1,250	49	176	1.5	240
KHS360-250	250	294	1,470	68	178	1.5	267
-400	400	470	1,470	64	182	1.5	319

At a glance

Stacker Crane Buffers : KCSC Series

Model	Stroke (mm) St	Max Energy /Cycle (kJ) E_T	Max Energy /Hour (kJ/h) E_TC	Max Shock Force (kN) F_S	Max Side Load Angle(°)	Weight (kg)
KCSC90-50	50	5	251	130	2.5	13
-100	100	10	514	130	2	14
-150	150	16	764	130	2	15
-200	200	21	1,019	130	2	16
-250	250	26	1,091	130	1	17
-300	300	31	1,222	130	1	18
-350	350	36	1,645	130	1	19
-400	400	42	1,495	130	0.5	20
-450	450	48	1,417	133	0.5	21
-500	500	52	1,378	131	0.5	22
-600	600	59	1,144	122	0.5	25
-700	700	66	793	118	0.5	33
-800	800	75	701	118	0.5	36
KCSC110-50	50	8	385	195	2.5	14
-100	100	14	738	179	2	16
-150	150	21	1,145	179	2	20
-200	200	29	1,214	179	2	22
-250	250	35	1,373	176	1	24
-300	300	43	1,542	179	1	26
-350	350	49	1,758	176	1	28
-400	400	57	1,972	179	0.5	30
-450	450	64	2,184	177	0.5	32
-500	500	72	2,399	179	0.5	34
-600	600	86	2,818	179	0.5	36
-700	700	99	3,231	176	0.5	42
-800	800	108	3,648	169	0.5	50
-900	900	114	4,069	159	0.5	52
-1000	1,000	117	4,528	146	0.5	58
-1200	1,200	125	3,585	130	0.5	65
-1400	1,400	135	2,492	121	0.5	75

At a glance

Stacker Crane Buffers : KCSC Series

Model	Stroke (mm) St	Max Energy / Cycle (kJ) E_T	Max Energy / Hour (kJ/h) E_TC	Max Shock Force (kN) F_S	Max Side Load Angle(°)	Weight (kg)
KCSC130-50	50	12	767	312	2	13
-75	75	19	857	312	1.5	15
-125	125	31	1,060	312	1.5	17
-200	200	50	1,443	312	1.5	21
-250	250	62	1,708	312	1	23
-300	300	75	1,966	312	0.5	26
-350	350	87	2,257	312	0.5	29
-400	400	100	2,514	312	0.5	32
-450	450	112	2,773	312	0.5	36
-500	500	122	3,028	306	0.5	42
-600	600	147	3,528	306	0.5	49
-700	700	178	4,033	318	0.5	56
-800	800	195	4,532	305	0.5	62
-900	900	208	4,921	289	0.5	69
-1000	1,000	228	4,971	284	0.5	80
-1200	1,200	244	6,139	255	0.5	102
-1400	1,400	254	3,706	226	0.3	107
-1500	1,500	267	3,169	222	0.3	110
KCSC200-50	50	20	1,226	504	2	90
-100	100	40	1,994	504	1.5	95
-150	150	60	2,283	504	1.5	100
-200	200	81	2,584	504	1	105
-250	250	101	2,873	504	0.5	110
-300	300	121	3,712	504	0.5	120
-400	400	161	4,295	504	0.5	130
-500	500	202	4,885	504	0.5	140
-600	600	242	5,474	504	0.5	150
-700	700	282	6,059	504	0.5	160
-800	800	322	6,648	504	0.5	170
-900	900	363	7,238	504	0.5	180
-1000	1,000	377	7,952	471	0.5	190
-1200	1,200	429	6,396	447	0.5	210

At a glance

Stacker Crane Buffers : KCSC Series

Model	Stroke (mm) St	Max Energy / Cycle (kJ) E_T	Max Energy / Hour (kJ/h) E_TC	Max Shock Force (kN) F_S	Max Side Load Angle (°)	Weight (kg)
KCSC215-100	100	61	2,345	764	2	87
-150	150	92	2,666	769	1.5	94
-200	200	122	2,977	764	1.5	101
-250	250	166	3,289	832	1	108
-300	300	185	3,608	769	0.5	114
-400	400	244	4,245	764	0.5	127
-500	500	306	5,504	764	0.5	158
-600	600	368	6,163	766	0.5	171
-700	700	429	6,772	766	0.5	185
-800	800	488	7,409	762	0.5	198
-1000	1,000	608	8,693	761	0.5	225
-1200	1,200	697	8,132	726	0.5	242
KCSC275-100	100	101	3,179	1,268	2	164
-150	150	152	3,596	1,268	1.5	175
-200	200	203	3,969	1,268	1.5	186
-250	250	252	4,385	1,261	1	196
-300	300	303	4,897	1,262	0.5	207
-400	400	404	5,594	1,263	0.5	228
-500	500	506	6,414	1,264	0.5	250
-600	600	607	8,042	1,265	0.5	309
-750	750	758	9,252	1,263	0.5	341
-900	900	910	10,462	1,264	0.5	373
-1050	1,050	1,061	11,661	1,263	0.5	405
-1200	1,200	1,027	10,479	1,070	0.5	438

At a glance

Visco-Elastic Buffer : KES Series

Model	Stroke (mm) St	Max Energy / Cycle (kJ) E_T	Dyn. Reaction Force (kN)		Impact Velocity(m/s)	Weight (kg)
			RDmin	RDmax	max	
KESM25-12	12	0.1	6	11	2	0.3
KESM35-22	22	0.4	14	27	4	0.7
KESM40-22	22	0.4	14	27	5	0.8
KESM50-35	35	1.5	28	60	5	1.9
KESM60-35	35	1.5	28	60	5	2
KESM75-45	45	3.5	45	100	5	5
KESM90-60	60	7	90	150	5	10.5
KESM110-80	80	14	130	230	5	17
KESE116-105	105	25	167	310	4	25
KESE142-130	130	50	260	500	4	37
KESE160-140	140	75	400	700	4	45
KESE180-160	160	100	470	820	4	73
KESE215-180	180	150	640	1100	4	117
KESS50-150	150	6	25	50	3	4.2
KESS75-150	150	12	66	100	3	11
-200	200	12	42	78	3	11
KESS90-200	200	25	95	150	3	20
-270	270	25	66	112	3	25
KESS110-275	275	50	118	230	3	40
-400	400	50	75	150	3	40
KESS110-400H	400	100	175	320	3	65
-600	600	100	85	230	3	65
-800	800	150	80	250	3	115
KESH130-400	400	100	190	310	3	63
KESH140-500	500	150	200	380	3	90
-400H	400	220	380	685	3	100
KESH155-650	650	250	270	490	3	135
KESH175-850	850	400	330	600	3	218
KESH200-1050	1,050	600	370	740	3	295
KESH220-1200	1,200	800	430	860	3	420
KESH230-1300	1,300	1,000	500	1,000	3	470

At a glance

Elasto-Fluid Heavy Duty Buffer : KVD Series

Model	Stroke (mm) St	Max Energy / Cycle (kJ)	Max. Dynamic Force (kN)	Preload (kN)	Weight (kg)
KVD55-50	50	3	76	4	3
KVD100-50	50	9	236	23	9
-100	100	18			11
KVD130-100	100	33	421	40	19
-150	150	50			20
KVD180-100	100	51	643	88	46
-200	200	102			50
-300	300	154			56

Rate Controls : KRC Series

Model	Stroke (mm) St	Max. Propelling Force(N)		Weight (g)
		Ext	Comp	
KRC30-50	50	3,000	3,000	310
-100	100	3,000	2,600	380
-150	150	3,000	2,100	450
-200	200	3,000	1,400	530
-250	250	3,000	800	600
KRC50-50	50	11,000	11,000	2,000
-100	100	11,000	11,000	2,500
-150	150	11,000	11,000	3,000
-200	200	11,000	11,000	3,300
-250	250	11,000	11,000	3,600
KRC70-50	50	20,500	20,500	1,700
-100	100	20,500	20,500	2,100
-150	150	20,500	20,500	2,400
-200	200	20,500	20,500	2,700
-250	250	20,500	20,500	3,000
-300	300	20,500	20,500	3,300
-350	350	20,500	20,500	3,700

At a glance

Hydro-Check - KHC Series

Model	Stroke (mm) St	Max Load Angle From Axis (°)	Speed Adjustment Range		Weight (g)
			Load Limits (N)	Feed Rate Limits (mm/s)	
KHC24-15	15	1.2	100-2,500	0.2-30	385
-30	30	1			450
-60	60	0.5			635
-90	90	0.3			745
-120	120	0.2			885
KHC31-40	40	1	450-3,500	0.2-30	1,040
-60	60	0.5			1,245
-100	100	0.3			1,655
KHC38-60	60	0.5	1,500-5,000	0.3-30	2,490
-100	100	0.3			3,310

Gas Springs

KG Series

Model (Push Type)	Max Stroke (mm) St	Max Force (N)
KG15	200	Below 300
KG18	250	Below 600
KG22	300	Below 900
KG30	350	Below 1,200
KG35	400	Below 2,000
KG40	500	Below 3,000
KG50	700	Below 5,000
KG75	1,000	Below 8,000
KG100	1,300	Below 12,000

KGP Series

Model (Push Type)	Max Stroke (mm) St	Max Force (N)
KGP22	300	Below 200
KGP30	350	Below 900
KGP35	400	Below 1,200
KGP40	500	Below 1,500
KGP50	700	Below 2,000
KGP75	1,000	Below 3,000

KGL Series

Model (Push Type)	Max Stroke (mm) St	Max Force (N)
KGL28-50	50	100 - 1,300
-80	80	
-100	100	
-150	150	
-200	200	

Instruction Manual & Safety Note

1. SHOCK ABSORBER

KOBA Shock Absorber has been developed for million cycles and assures long life cycles if customers keep below matters.

1) Ensure correct energy capacity before operation of shock absorber.
2) Do not weld or paint shock absorber's body.
3) Do not scratch or paint piston rod. (shock absorber can fail by oil leakage.)
4) Adjustment dial knob is preset to "0" when released from factory. Once achieved the correct damping strength, lock the screw.
5) Shock absorber shall be kept away from fire because it can be ignited.
6) Always check strength of installation site before using and it is recommended to install shock absorber at strong base structure. Secure the strength as "max. shock energy x safety ratio(2.5)"

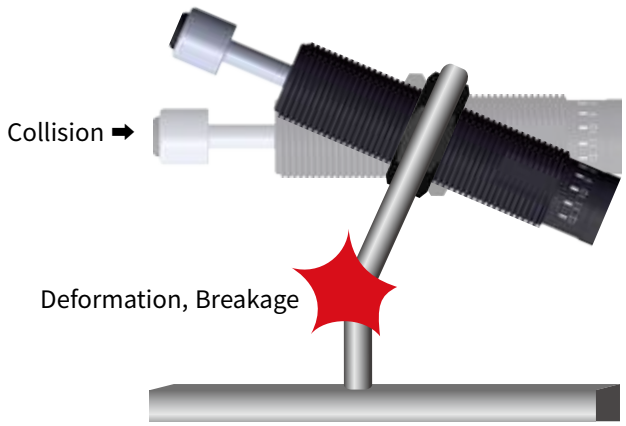

7) Refer to below table of proper lock nut installation tightening torque. Tightening with excessive force may cause malfunction or damage to product.

Shock Absorber Installation Torque.

Thread (mm)	M8x1.0	M10x1.0	M12x1.0	M14x1.0 / M14x1.5	M16x1.5	M20x1.5	M25x1.5 / M25x2.0	M27x1.5 / M27x2.0 / M27x3.0	M30x1.5	M36x1.5	M42x1.5
Nut Torque (Nm)	3.9	7.8	7.8	9.8	14.7	29.4	49	58.8	78.4	98	392

Applying anti-loosening adhesives is more efficient.

8) Be careful when using a snap ring structure shock absorber. In case of overloading the specification that mentioned on catalog, Snap ring and inner subparts can be swiftly extracted because inner pressure of shock absorber's Inner tube can be abnormally risen. Follow the designated specification and don't close your face to Snap ring type of shock absorber.
9) Don't carelessly dispose of oil in side of shock absorber for the environment and dispose according to waste control act.

Instruction Manual & Safety Note

10) Be careful of eccentric load and eccentric angle. If the impact load is over θ=1° of declination, Piston Rod can't be properly returned by bending deformation, and performance decline can occurred because of uneven wear of sliding parts, and machine damage can be occurred. Impact should be in center line of Piston Load (below θ=1°).

11) Check the operating temperature (-10~80°C) to get best performance. If you use it out of standard temperature range, the life expectancy of Seal and Accumulator can be decreased and it can be broken.
(If you need to use shock absorber in special temperature, please contact us.)

12) If you use it on the circumstance of outer pressure like vacuum status, etc. instrument breakage can be occurred. Don't use it where cutting debris, cutting oil, moisture, etc is attached to Piston Rod, which cause malfunction, instrument breakage.
(If you want to use it on these circumstances, please contact us.)

13) Adjustable type of shock absorber is designed to get suitable resistance force according to impact velocity by controlling the orifice area. Refer to below adjustment dial of KMA, KSA, and KHA Series.

The figure below shows the typical adjustment dials of KMA, KSA and KHA series.
After completing the adjustment, be sure to fix the adjustment dial with the setting fixing bolt.

KMA & KSA & KHA Series Adjustment Dial

KMA Series	KSA Series	KHA Series
Set screw bolt	Set screw bolt	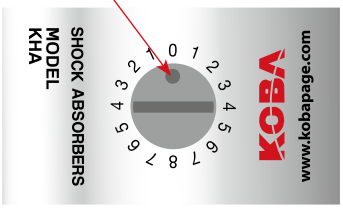 Set screw bolt

Applying anti-loosening adhesives is more efficient.

14) How to mount the Flange

After holding the flange in fixing position, tighten the Lock Bolt, and then pressure is applied to the Lock Slot to fix the position correctly. If you want to remove the shock absorber and Flange, loosen the bolt only.

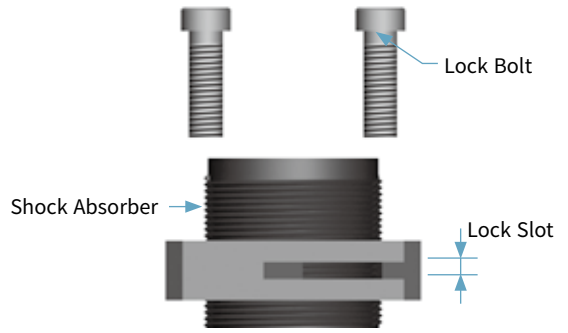

Before Fixing

After fixing

15) Precaution in case of rotation moving

As shown in the figure, Rotation location from shock absorber's center shall be ten times of stroke length. If the distance is short, the life span of absorber can be shortened by uneven load. In particular, do not use Urethane Cap in rotary motion. If the center distance of the shock absorber is to be inevitably shortened, use the uneven wear adapter.

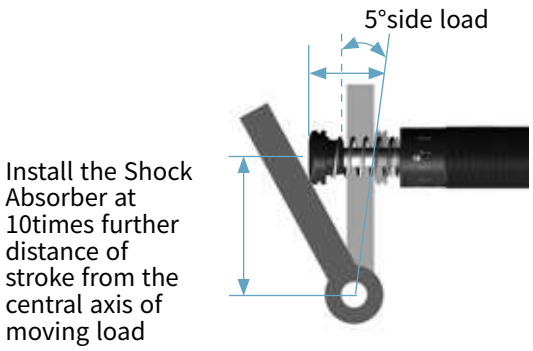

Rotating Movement

Side Load Adapter Instsllation

2. General Checking

1) Regular Checking

① Check the below things regularly.

Because disassemble repair of shock absorber is not possible, in case of malfunction change it as new one. Don't carelessly dispose of oil in side of shock absorber for the environment and dispose according to Waste Control Act.

Instruction Manual & Safety Note

2) Checking Point

- Lock Nut fastening condition
- Condition of Piston Rod (Damage or Scratch)
- Checking the Stroke
- Outer Appearance of shock absorber
- Oil Leakage
- Noise on operation

If any trouble to be found, please refer the below “3) Trouble and Count measure”.

3) Trouble and Count measure

Trouble	Cause	Counter Measure
Lock nut is not fastened tightly	Lack of fixing torque	Fasten the nut or bolt tightly
	Vibration of machine	Check the vibration and adjust it
No suitable Shock Absorption	Applied energy is over the capacity	Change it with higher capacity one
	No suitable dial adaption	Set adjustment dial to “0”
	During Stroke transfer, the movement is stopped by stopper	Adjust the stopper location to use long stroke
	The shock absorber is not in center line	Install the shock absorber in center line
	Impact angle is over 1° from the center axis	
	Vibration on impact material	Install the guide to remove the vibration
	Body of shock absorber is used as Stopper	Install Stop Collar or Stopper
	Ambient temperature is high	Change it to heat-resisting type
	Oil Seal is damaged because of foreign material on the Piston Rod	Clean Piston Rod and cover the Piston Rod
	Moving material is shocked directly to shock absorber	Install Side Load Adaptor
	Life span is over	Change it a new one
Oil leakage	Oil Seal is damaged because of foreign material on the Piston Rod	Clean Piston Rod and cover the Piston Rod
	Ambient temperature is too low	Change it to cold-resisting type
	Life span is over	Change it a new one
Rod is not returned	The shock absorber is not in center line	Install the shock absorber in center line
	Impact angle is over 1° from the center axis	
	Vibration on impact material	Install the guide to remove the vibration
	Body of shock absorber is used as Stopper	Install Stop Collar or Stopper
	Ambient temperature is too low	Change it to cold-resisting type
	Life span is over	Change it a new one

※ If Shock absorber is installed inside of Chamber, please use after consulting with us.

KOBA
BEST SHOCK ABSORBER

※ The specifications in catalog are subject to change without notice in order to improve performance.

KOBA
BEST SHOCK ABSORBER

ADDRESS

Head Office
6F KOBA TOWER, 869, Buil-ro,
Guro-gu, Seoul, Korea
T +82-2-3397-7800 F +82-2-2611-5970

Onsu 1 Factory / R&D center
28, Buil-ro, 1 na-gil, Guro-gu,
Seoul, Korea
T +82-2-3397-7800 F +82-2-2619-7680

Onsu 2 Factory
81, Buil-ro 815beon-gil, Bucheon-si,
Gyeonggi-do, korea
T +82-2-2105-5643 F +82-2-2612-7628

www.kobapage.com
E-Mail. koba@koba.co.kr