TEKWORLD 樺皓企業有限公司

TEKWORLD CORP Co., Ltd. Catalogue

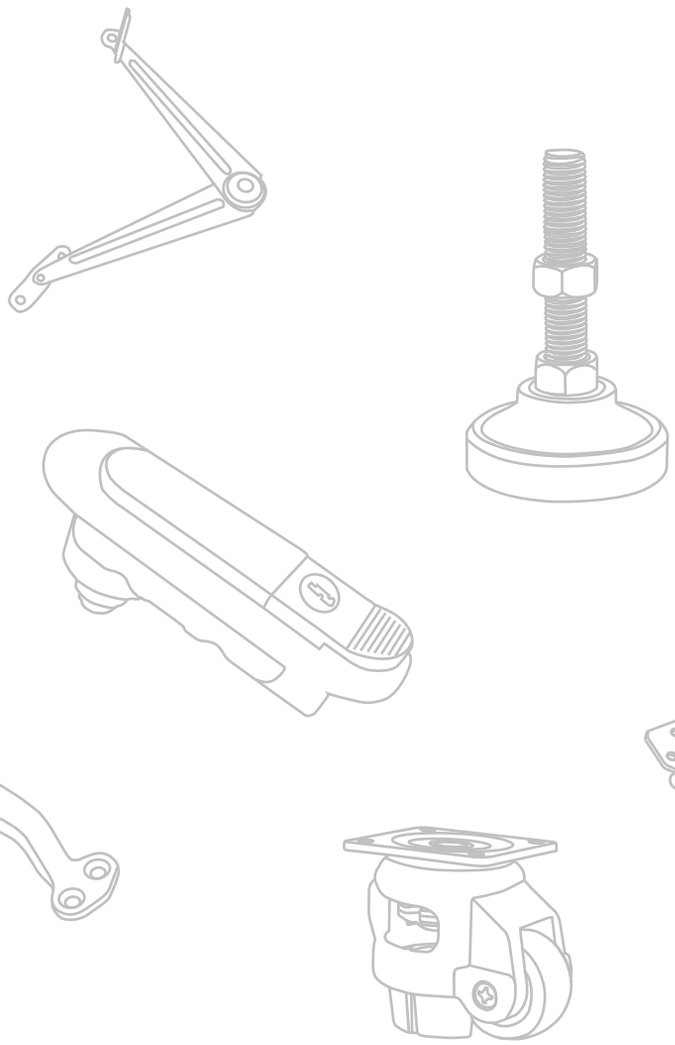

2021年製版

門鎖 Locks & Catches TM

合頁 Hinges-OH

滑軌&氣壓棒 Slide rail&Gas pressure bar HG

彈簧&配件 SPRING&Accessories TH

膠條 Gasket JT

螺柱&螺絲 Studs&Nuts&Screws(knurled) LZ

把手 Handles TG

搭扣&磁鐵 Fasteners DK

腳輪&腳座 Casters&Leveling feet JZ

警示燈&工具燈 LED JD

http://www.tekworld.com.tw

02-8923-2209

02-2927-4556

公司概要 Company profilo

公司名稱 Company name	樺皓企業有限公司
設立 Establishment	民國91年10月19日
資本額 Capital	新台幣500萬
負責人 President	蔡宗樺
員工數 Employees	80名

歷程 History

1996	公司登記設立
2005	大陸 廣東分公司設立
2007	大陸 東莞工廠登記設立
2010	新加坡 分公司登記設立
2012	大陸 昆分公司山登記設立

經營理念 Business philosophy

樺皓企業設立迄今已15餘年，長期代理及銷售外國各類別五金配件品牌銷售，通過提供高精度、高性能的機械配件產品，為目前國內發展顯著的半導體行業、液晶顯示行業、LED太陽能行業、工業電池行業、個人電腦、雷射鈑金等行業，採用必要的時候提供必需的產品體制。通過銷售產品及相關企業活動來對社會做出貢獻，與客戶、員工、廠商一起繼續成長及發展。

在現今競爭激烈的市場中，美觀的產品外觀、人體工學設計及卓越的使用功能，絕對是客戶設計、應用、採購的主要因素。

因此，樺皓企業本卓理念，致力幫助客戶解決工程設計困難，與我們合作原廠端所有同仁，憑藉我們的熱情、願景及專業服務，幫助客戶創造與眾不同的產品。



*注意事項

1.本公司有權利隨時修改任何變更內容或細項
2.請注意產品的零件編號(形狀、名稱、規格、材質、價格)如有變更，恕不另行通知
3.請務必先依照本型錄刊載的參考資料後，進行安裝試驗後再決定是否購買、選用產品
4.本型錄資料並非規格值。此外，型錄記載內容可能因性能提升、規格變更等因素而改變，恕不另行通知
5.使用前，請務必進行自主測試，先確認是否符合使用目的。此外，文中介紹的用途並不保證不會與任何專利牴觸

賣方保證,由製造和出售符合其產品規格,在正常情況下使用時原料和工藝無缺陷,而且任何缺陷不應由以下原因造成:
(1)安裝方法
(2)客戶或第三方的濫用或誤用
(3)沒有遵照賣方的指導說明
(4)除賣方產品文件另有規定,因環境條件導致的損壞
書面通知賣方:買方採取任何措施應自發現或應該發現該違反保證保證情況之日起一年內做出

賣方在任何情況下均不對因延遲而產生的間接損害,經濟損失,使用損失,利潤損失,停工時間或損害負責,不論該延遲是由於違反保證,違約,疏忽或其他原因造成,也不論是否能預見或賣方是否告知此類損毀。

產品設計和製造可廣泛用於多種工業用產品。因為不可能預料到每一種應用的具體場合,因此,用戶必須在實際條件和環境下對該產品進行試驗,從而確定該產品是否適合用戶所希望的用途和功能。

以上說明無法套用在每一個狀況，因為使用條件將隨沒種應用場合和安裝方式不同而改變,除特殊聲明之外,所得出的強度和壽命週期數據都是在常溫下通過測試

所指出的阻燃等級僅僅使指材料性能,除另有註明之外,不代表產品的實際尺寸和性能。尺寸僅僅是為用戶能夠能夠確定產品外部輪廓尺寸和正確安裝產品而提供,本公司不擔保資料沒有錯誤或遺漏,可能隨時改變設計,尺寸,規格,將不另行通知,一切使用資源都將客戶承擔

各標誌說明

● 注意
操作錯誤時，可能會成為導致意外或故障原因。
為了安全的使用請務必確認注意事項。

● 新產品

● 綠色標誌
販賣許多對應RoHS指令——自2006年7月1日開始執行的EU指令——的產品，在電氣、電子設備上限制特定有害物質的運用。
此標誌為其記號。
本文表格中的
●：RoHS指令對應產品
▲：可與RoSH指令對應
敬請洽詢。

● 粉塵對策產品
抑制了金屬粉塵產生的產品

● 三點緊固
採用上、中、下三個方向將縱長型箱櫃等確實緊固。
請與鎖桿、鋼索、門閂、滾輪裝置等組合使用。

● 抗菌
使用抗菌材。

● 防水
使用了O型環、密封條等的防水類型產品。

● 不鏽鋼系列
使用了不鏽鋼SUS316、SUS304、SUS430等材質的產品。

● 鋅合金系列
是以鋅(Zn)為主成分，機械性質優異，可實現耐腐蝕性佳的電鍍等

● 鈦系列
比重約為不鏽鋼的1/2，強度與鋼匹敵，能夠完全抵抗海水腐蝕。
使用了既輕且堅固，不易生鏽的鈦金屬產品。

● 鎖緊標誌
在鎖緊的同時能將密封條一併鎖緊，可實現強力的氣密效果。
用於防止EMI、震動對策、隔音等需要氣密的場所最適合。

● 萬用鑰匙系列
用1把鑰匙就能對子鑰匙各有不同的鎖芯和把手上鎖或開鎖的產品。
符合客戶規格的訂購生產品。
敬請洽詢。

● 改變萬用鑰匙
貼上此標誌的產品，標準規格為相同鑰匙編號(相同鑰匙)、不同號鑰匙(個別鑰匙)之外，還可組配萬用鑰匙系統。符合各規格的訂購生產品。
敬請洽詢。

● 雙方向可拔
上鎖時、開鎖時均可拔插鑰匙。

● 耐熱型註冊設備
內置公共設施的消防設備與保安設備，為了讓耐熱型配電盤有效操作，符合嚴苛的耐火測試。

● 阻燃性
使用了相當於UL-94阻燃材料的產品。

● SEMI STANDARD
符合半導體或FPD製造裝置的安全標準SEMI S8-0701的產品

● 彩色系列
可配合豐富多樣的標準色和框體，從各種顏色中進行選擇。
選購顏色，敬請洽詢。

● CAD檔案
有2D或3D格式的CAD檔案。
本文表格中2D：2D(DXF)檔案。
本文表格中的3D：3D(ACIS、STEP、PARASOLID、IGES)。
若需參考相關檔案，可參考下方官網網站。

七大領域的應用以滿足客戶需求

IT(Information Tochnology)

半導體製造設備、大型電腦、伺服器
相關機器、為個人資訊提供保戶的電
子機器安全性產業

高安全性鎖具
high security series

機櫃、機架
Server Rack&Enclosure

C.C.BOX、多用途地下管線
infrastructure

歐洲風格樹酯把手
Euro Style Plastic Handles

ITS(智慧型運輸系統)
intelligent Transport Systems

遮罩裝置、預置配電盤
Shelter Cubicle Hardware

半導體製造裝置
Semiconductor Manufactering Equipment



交通

高速公路的ITS、ETC等道路相關產業、
新幹線(日本、台灣)等鐵路、船舶、卡車
製造產業、從宇宙至深海的最尖端機器

高安全性鎖具
high security series

鐵路車輛、航空機械
Train Parts&Aero Parts

C.C.BOX、多用途地下管線
infrastructure

港灣、船舶設備
Marine Hardware

ITS(智慧型運輸系統)
intelligent Transport Systems

特種車輛、巴士、卡車
Vehicle Components



標準規格

創業以來，從五金業界產品、TAK
系列至盤用平面把手、插銷、鉸鍊、
鎖類，各種規格都能供應

高安全性鎖具
high security series

聯鎖、開關鎖
Interlock & key-switch

C.C.BOX、多用途地下管線
infrastructure

配電盤、分電盤
Switchboard&Cubicle Hardware

冷凍櫃、五金配件
Freezer Hardware

機、現金出納機
Machine Hardware

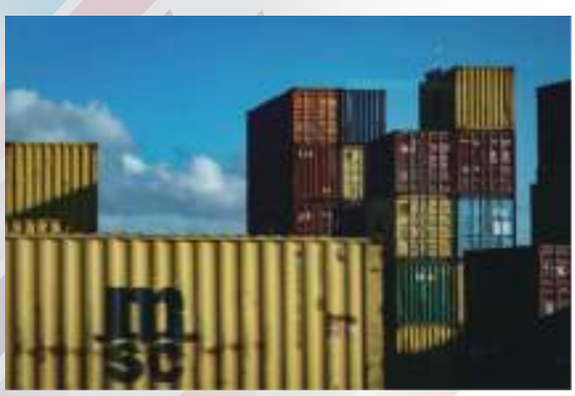

新能源

伴隨著地球資源枯竭而開發的新能源產業，
如風力、水力、波力、太陽能等的發電設施、
蓄電技術、超傳導技術

太陽能板
Solar panel

垂直軸風力發電機
Vertical axis wind turbine,VAWT

潮汐發電
Tidal power

波力發電沉箱防波堤
Wave power extracting caisson breakwater



新材料

具有強耐腐蝕性的超級不鏽鋼和鈦等製品、用於海洋岸設施相關機器、化學成套設備等

汽車發動機
Automobile engine

商用飛機
Commercial aircraft

化學化工設備
Chemical Equipment



環境

致力於防止地球溫室化效應的機械產業，抑制二氧化碳排放量的環境機器產業

環境裝置、環境金屬件
Environmental equipment

運輸機器人
AGV Kit

LED警示燈、工作證
LED lighting



健康

高齡化社會中福利、看護等設施的設備機器，以及高精度醫療機器部品

健康醫療設備
Health & Hospital equipment



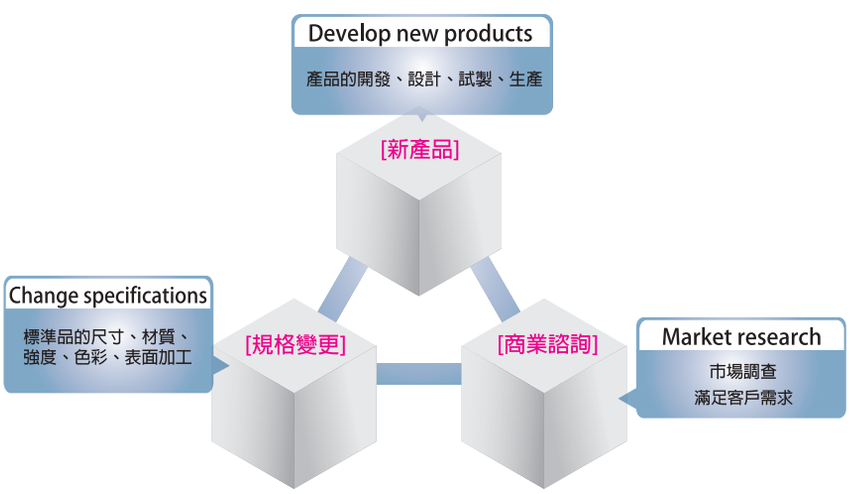

腳輪構造說明

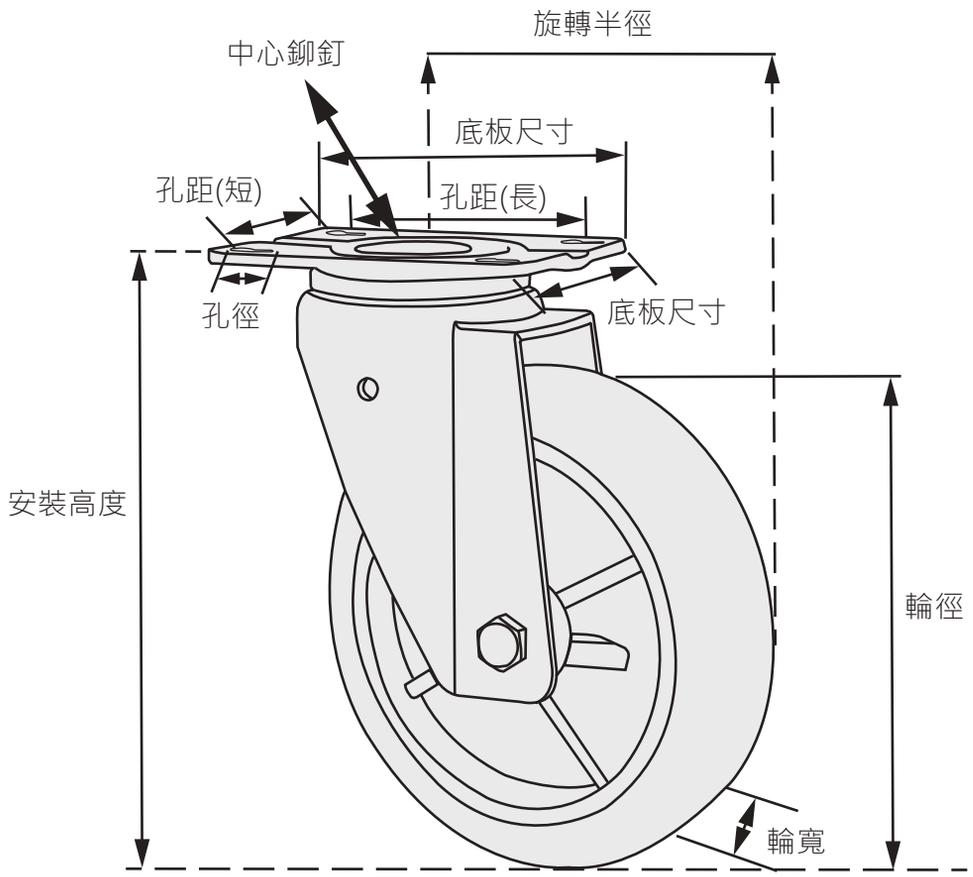

安裝高度
Overall Height

指從地面到設備安裝位置之間垂直距離，腳輪的安裝高度是指腳輪底板與輪子之間最大的垂直距離。

偏心距
Offset

指中心鉚釘垂直線到輪芯中芯的水平距離。偏心距數值愈低愈耐重，數值愈高愈易轉向。

旋轉半徑
Swivel Radius

指中心鉚釘垂直線到輪胎外邊緣的水平距離，適當的間距讓腳輪能做360度旋轉。

平底安裝尺寸
Top Plate Bolt Hole Spacing

平底板上的安裝孔位間距。

波盤
Raceway

波盤為腳輪底板與支架之間的滾珠盤處，使腳輪可以旋轉。

中心鉚釘
Kingpin

使底板和支架之中心鉚接處，無中心鉚釘腳輪為防撞輪結構設計。

選用腳輪指南

選用腳輪時,須注意下列幾項重點：荷重、場地、輪徑、材質、時速、台車用途與結構。

使用腳輪是為了提升工作效率而降低勞動力，請參考以下應用的方式、條件和要求選擇最適合你的腳輪達到省時，省力又省錢的最佳組合效果：

乘載重量
Load Capacity

*乘載重量計算 $T=\frac{E+Z}{M}$

T= 每只腳輪承載的重量

E= 運輸工具的重量

Z= 移動物體的重量

M= 輪子有效承載數量

*輪子有效乘載數量（M）如右圖一

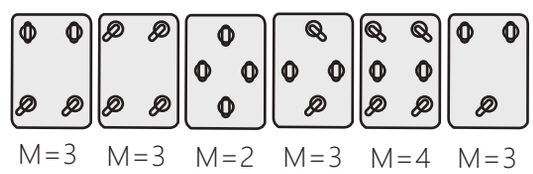

圖一

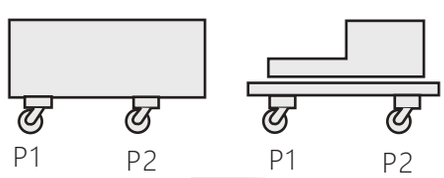

圖二

*選擇承重時要按最大支撐點（如圖二）處腳輪的成重量計算。腳輪具體受力支撐點如上圖，P2為最重支撐點。

靈活性
Maneuverability

*腳輪應靈活，輕鬆並耐用，其轉動部位（腳架轉動、輪子滾動）應選用摩擦係數小的材料或經特殊工藝後組裝的配件（如滾珠軸承或淬火處裡）。

*腳輪的偏心距越大轉向越靈活，但承載能力相應降低。

*輪子的直徑越大推動越省力，並能更好地保護地面。輪子大比小轉動緩慢、不易發熱變形、更耐用。在安裝高度允許的條件下盡可能選擇大直徑的輪子。

移動速度
Operating speed

*腳輪的速度要求:在常溫環境下，在平坦的地面上、不高於步行速度4km/h並有一定停歇的工作狀態。

使用環境
Operating environment

*選擇時應考慮地面材料、障礙物、殘留物或特殊環境（如鐵屑、高溫、低溫、強酸、強鹼、油液和化學溶劑以及要求抗靜電的場所）在特殊場所中使用的腳輪應選擇用特殊材料製成的腳輪。

安裝方法

活動輪

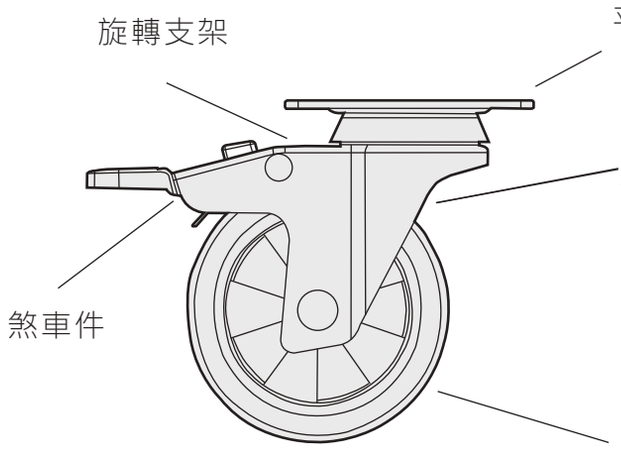

旋轉部和車輪都可以轉動的腳輪

固定輪

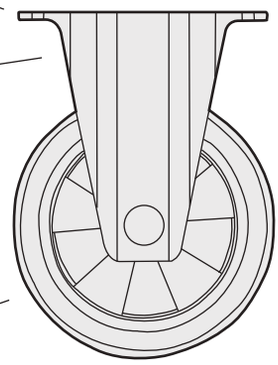

旋轉部不轉動，僅車輪轉動的腳輪

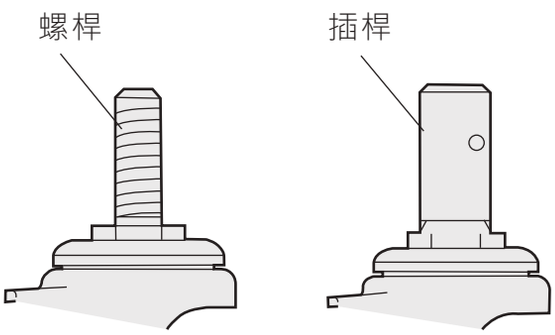

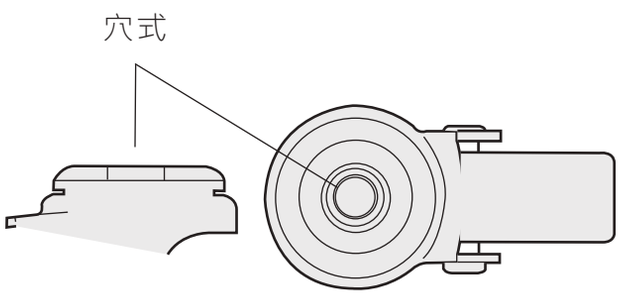

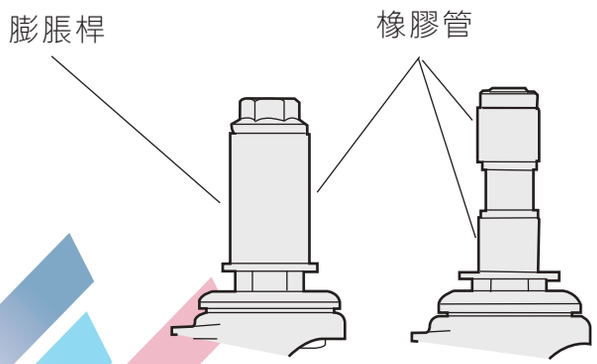

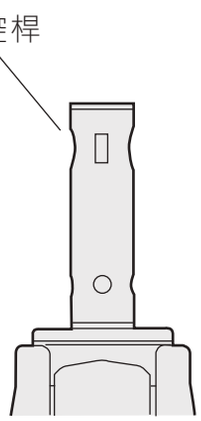

*選擇時應考慮地面材料、障礙物、殘留物或特殊環境（如鐵屑、高溫、低溫、強酸、強鹼、油液和化學溶劑以及要求抗靜電的場所）在特殊場所中使用的腳輪應選擇用特殊材料製成的腳輪。

旋轉波盤及無中心挪接部構造

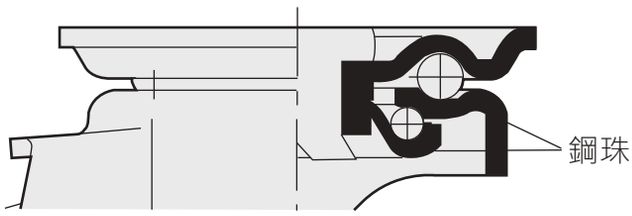

波盤結構（A）

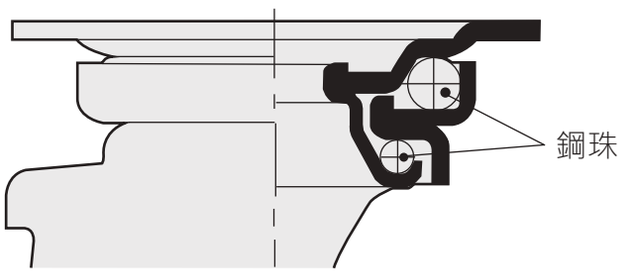

波盤結構（B）

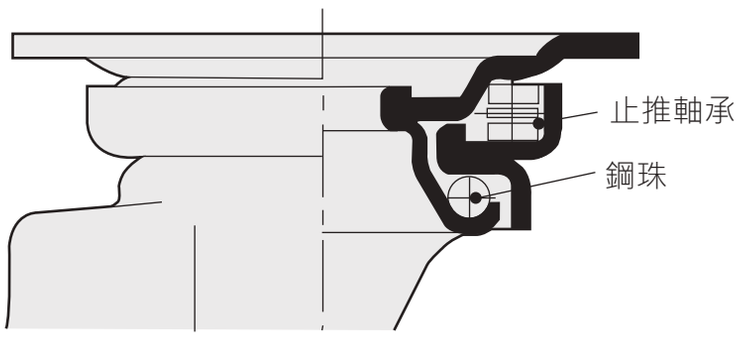

平面軸承（止推軸承）

平面軸承在裝配體中主要承受軸向載荷，轉動性最佳;適用於旋轉頻率高之使用

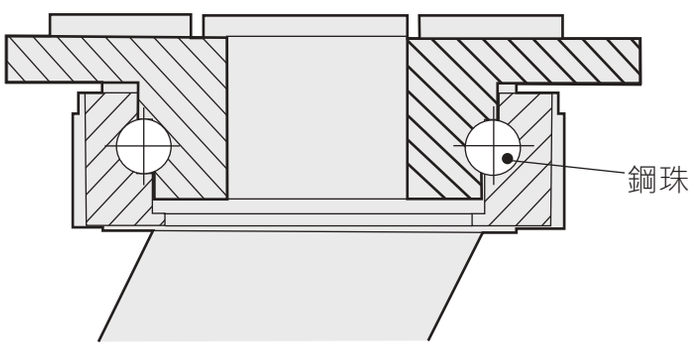

無中心鉚接結構（防撞結構）

*無中心鈿接設計又稱為「防撞輪」，由CNC高精密加工製成，適合重負荷

*可搭配雙排鋼珠結構或平面軸承結構

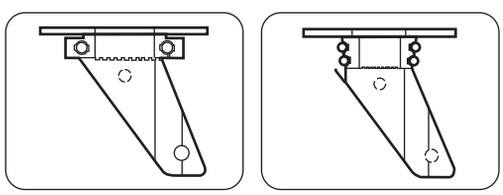

安裝指南
Installation guide

- 栓式螺釘
- 1/4轉快鎖式緊固件的搭扣
- 快速引導式螺紋螺釘的搭扣

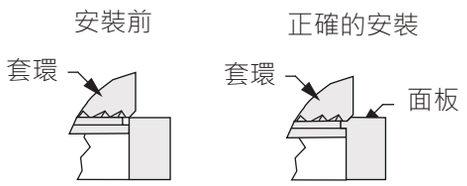

當自緊型緊固件被按入準備妥當的孔內時,該緊固件將面板材料以冷流方式移動到緊固件的固定凹槽內。然後材料將緊固件固定在面板內。

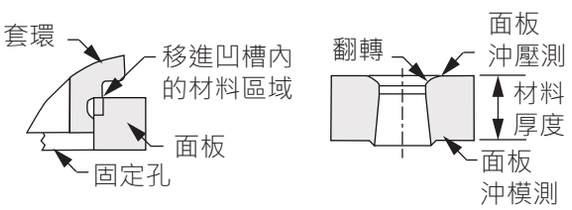

決定按入式安裝順利完成的因素有:

〈材料〉

面板材料的硬度不能超出其提供的推薦值。如果面板太硬,緊固件將無法正確安裝

〈安裝孔〉

固定孔可以使用鑽,沖壓或鑄造的方法成孔。

- 孔邊緣:頂部的孔邊緣必須尖銳且沒有破損。不要導角。
- 沖壓孔:使用小間隙的沖壓工具和沖模工具,將翻轉和開裂角減至最少。
- 孔直徑:在安裝緊固件的面板一側表面上測量孔直徑。該直徑不能超過所屬產品的技術規格。

1)如果孔過大,就不會有足夠的材料流入固定凹槽內,緊固件也就無法充分地固定。

2)如果孔過小,緊固件就無法配套,安裝也就變得困難,安全無法得到保障。

3)從面板邊緣開始的孔距離:除非另有標註,推薦的最小距離式1.5x固定孔直徑

- 彈簧駐塞
- 栓式螺母
- 螺紋鑲嵌件

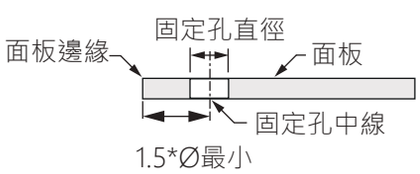

如果安裝太靠近邊緣會導致材料像反方向移動,損壞面板邊緣。要靠近邊緣安裝,您需要限制面板邊緣。

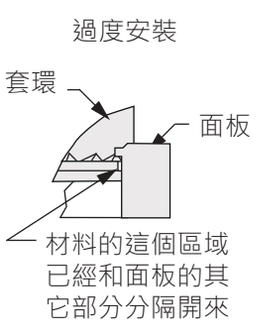

〈面板厚度〉

在固定孔位置的面板厚度必須符合或高過其推薦的最低要求。

如果材料太薄,可能導致面板變形或損毀。

遵照以下提示,您的安裝將會又快又輕松:

〈如何安裝〉

在註明的地方請使用推薦的工具和合適的支撐工具。

- 使用平行作用力按壓
- 使用的沖壓工具,其直徑大於緊固件的頭

〈安裝壓力〉

如果要安裝正確必須使用均勻分布充分刀安裝壓力。它和緊固件被壓入門板的深度無關。

- 不推薦使用槌子。因為槌子的衝擊力不能均勻地分布讓面板材料完全流入緊固件的凹槽。
- 根據上述註明的標準,每次應用的安裝壓力會各不相同。
- 在沒有套環的部件上使用強制停止,將其押入直到滾花的邊緣剛好露出。

〈何時安裝〉

- 建議在對面板進行鍍層或表面處理之後再安裝。
- 孔的直徑必須滿足規格,然後進行表面處理或鍍層。
- 切勿過度安裝部件。否則會影響材料,減少止動強度。



要添加黑色粉末噴塗表面處理,請按以下所示更改表格中的零件號:

將1變為5: 92-80-102-14
92-80-102-54
將2變為6: 92-80-102-24
92-80-102-64
將3變為7: 92-80-102-34
92-80-102-74

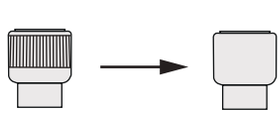

如需光滑把手,請按以下所示更改表格中的零件號:

將0變為1: 92-90-161-20
92-90-161-21
將4變為5: 92-90-101-24
92-90-101-25

氣壓棒構造說明

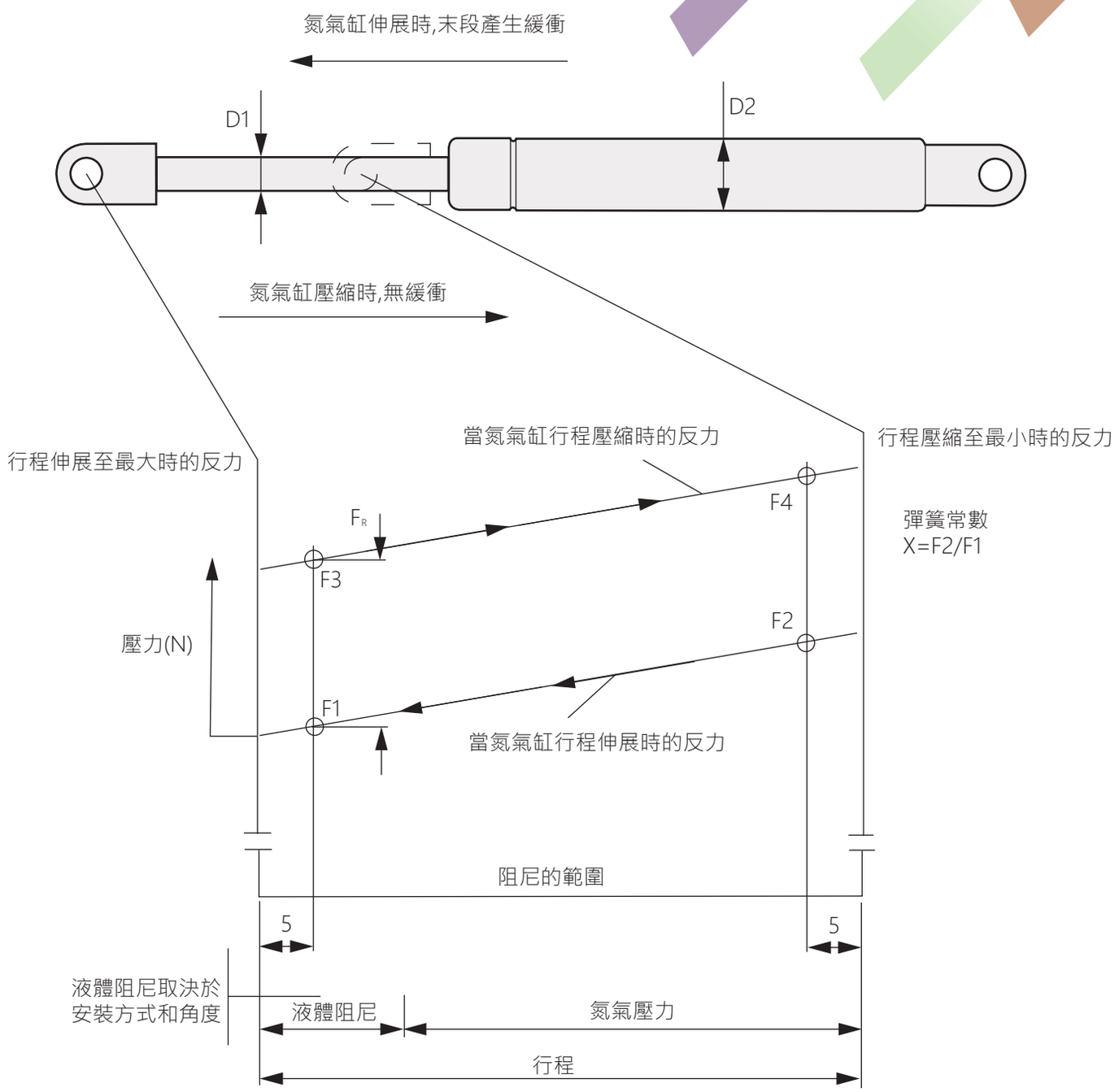

*注意事項

行程兩端從5mm或10mm的實際彈力讀數

F3=當氮氣缸開始壓縮5mm所量測的反力

F4=當氮氣缸壓縮至行程末了前5mm所量測的反力

F2=當氮氣缸行程完全壓縮後開始伸展至5mm所量測的反力

F1=當氮氣缸行程完全伸展至末端5mm所測量的反力

FR(磨擦力)=F3-F1,F4-F2

彈簧常數(X)=F2/F1

氮氣缸量測條件為攝氏25°C±3°C且軸心端向下

氣壓棒介紹
起重型,降低型,移動型,調整型
氣彈簧力可以設計近似線性,漸進或遞減彈簧剛度曲線,以符合特殊要求。
彈簧的特性曲線描述了氣彈簧力在行程中的變化,從擴展狀態到壓縮狀態，反之亦然。
如果彈簧剛度是平坦的並且實際上以線性方式進行，那麼，在整個彈簧行程中，
氣彈簧的力因此只會略微增加。
回彈率:X=F2:F1

左側的力圖顯示了拉伸力和壓縮力的線，彈簧剛度不變。
兩條線之間的差異是壓縮和伸展過程中產生的系統摩擦的結果。
測量點F1和F4分別位於完全伸展和壓縮的斯托克斯之前5～10mm，在25°C±3°C的溫度下進行測量。

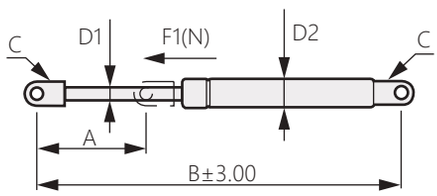

一般我們通過的壓力公差為+40N/-20N或±5%~7%,氮氣缸壓力
在物理上的變化取決於溫度,每上升10°C氮氣缸壓力會下降約3.5%

我們希望能幫助您選擇合適的氮氣缸，您可以使用下面的簡易公式
和應用概述
氮氣缸行程A
氮氣缸總長B
氮氣缸F1壓力值(牛頓)
氮氣缸兩端的連接頭種類C

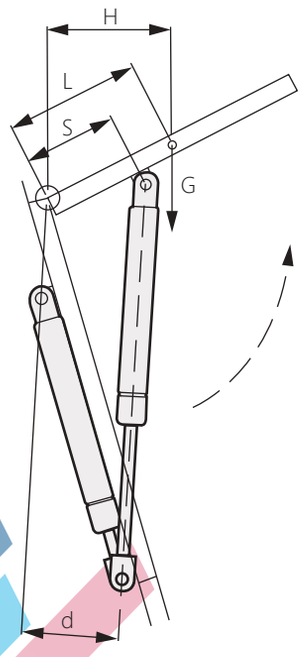

氮氣缸伸展壓力值F1(N)溫度條件在攝氏25°C±3°C

F1=G*H/d*n*13(N)
G=門蓋總重量於重心點 單位:KG
L=由鉸鍊至門蓋重心的距離 單位:公厘
d=由鉸鍊至氮氣缸軸心中心線的距離 單位:公厘
13=安全系數
S=由鉸鍊至氮氣缸安裝在們蓋上固定點於三分之二的位置 單位:公厘
n=氮氣缸安裝數量
H=由簡練至門蓋重心垂直距離 單位:公厘

範例:
G=30KG,H=400mm,d=200mm,n=2
F1=30*40/200*2*13(N)=390N

*安裝注意事項
安裝氮氣缸需注意不要偏斜
避免產生側向力
安裝氮氣缸時軸心端朝下方安裝
請保護軸心不要沾染灰塵,油漆和損傷
不能對氮氣缸做任何的金屬切削加工

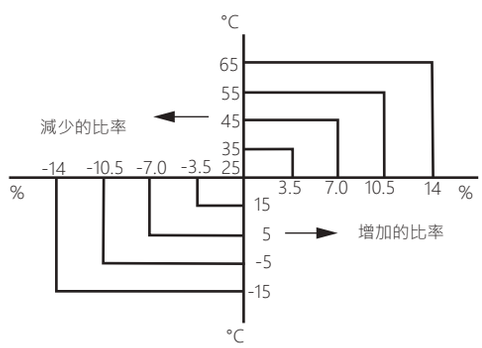

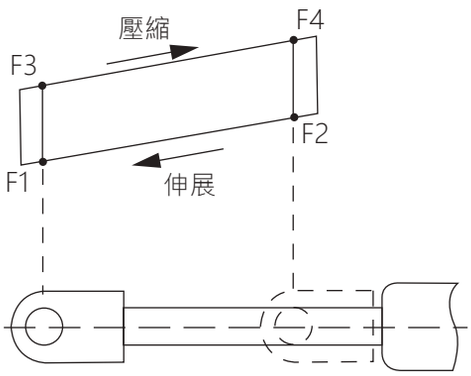

自由型產品規格範圍

軸心(Ø)	外管(Ø)	行程(mm)	壓力(N)
4mm	12mm	15~100	10~80
6mm	15mm	20~200	50~400
8mm	18+1mm	50~300	100~700
10mm	22mm	50~400	100~1150
14mm	28mm	100~500	300~2500
20mm	40mm	150~500	600~5000

9.8Newton(N)=1Kg=2.2LBS

可以在帶有孔眼端接頭或球形插座的標準型號之間進行選擇。

可根據要求提供其他連接方式。

標準特性是久經考驗的內部活塞桿，具有更長的使用壽命，高耐腐蝕性和環保設計。

在壓力管端部，輥道密封為標準配置，以確保最佳的密封效果而無焊縫和高耐腐蝕性。

根據不同的應用，使用不同的密封件。

通過專利迷宮式活塞實現液壓阻尼控制（在活塞桿伸出和/或壓縮期間阻尼）。

具有動態阻尼系統，可在氣彈簧的整個行程中實現所需的阻尼度。

氣壓棒結構圖

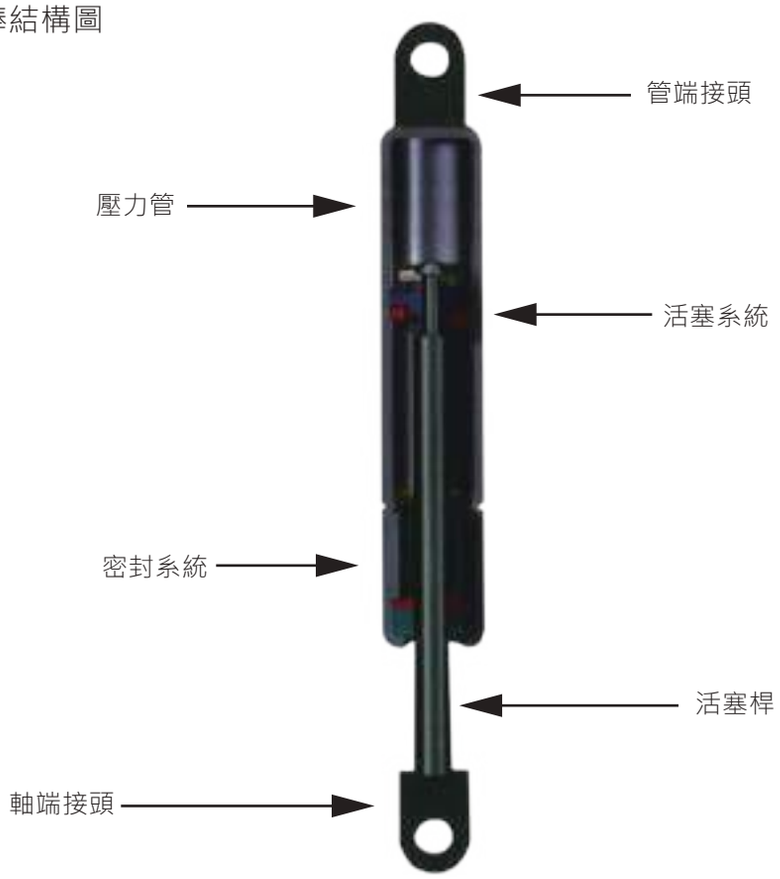

鉸鏈的介紹

[1]關於鉸鏈型式

(1)平型鉸鏈



(2)平行型鉸鏈



(3)階梯型鉸鏈

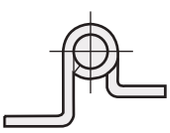

(4)型鍛型鉸鏈
單側半型鍛

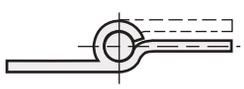

兩側半型鍛



[2]關於鉸鏈各部位名稱

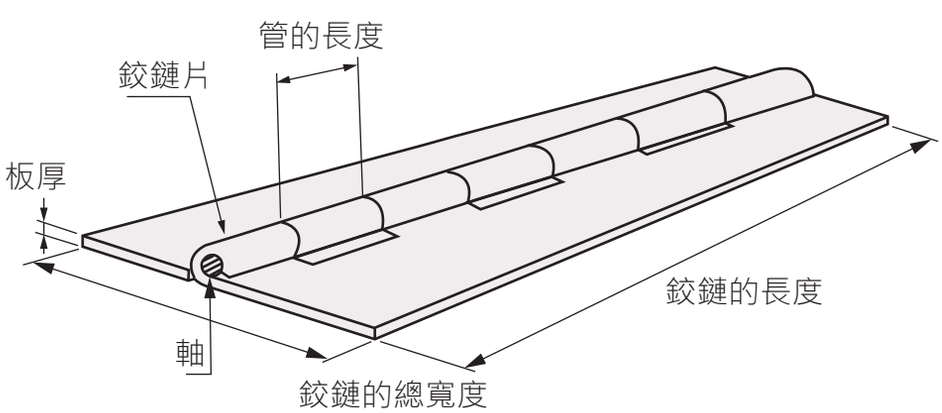

[3]拔插式鉸鏈的右型、左型的稱呼標準

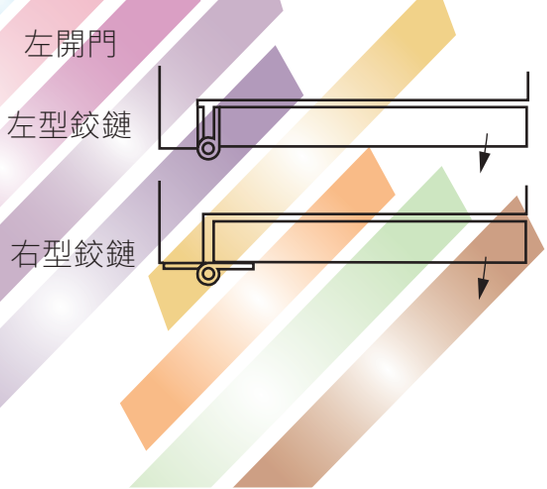

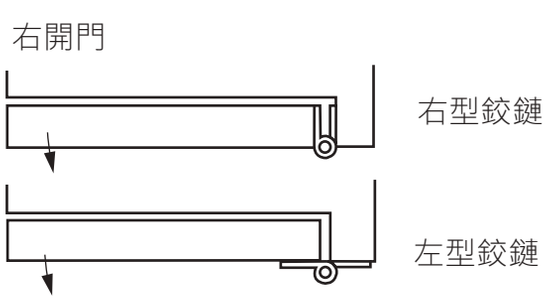

商品目錄 INDEX

TM 門鎖
Locks & Catches P57-214



OH 合頁
Hinge P215-308



HG 滑軌&氣壓棒
Slide rail & Gas pressure bar P309-320



TH 彈簧&配件
SPRING & Accessories P321-324



JT 膠條
Gasket P325-330



LZ 螺柱&螺絲
Studs&Nuts&Screws(knurled) P331-358



TG 把手
Handles P359-432



DK 搭扣、扣件、磁鐵
Fasteners P433-498



JZ 腳輪&腳座
Casters&Leveling feet P499-560



JD 工具燈、警示燈
LED



門鎖
合頁
滑軌 氣壓棒
彈簧 配件
膠條
螺柱 螺絲
把手
搭扣 磁鐵
腳輪 腳座
警示燈 工具燈



TM-2172 58



TM-172 58



TM-013 60



TM-8510 60



TM-0450 61



TM-1002 61



TM-092 62



TM-095 62



TM-836 63



TM-820 63



TM-1001 64



TM-068 64



TM-010 65



TM-062 66



TM-067 66



TM-064 67



TM-003 67



TM-065 68



TM-769 68



TM-088 69



TM-8172 69



TM-365 70



TM-36 70



TM-307 71



TM-308 71



TM-706 72

RoHS SUS不鏽鋼 CAD



TM-705 73

CAD



TM-814 74

ZDC鋅 CAD



TM-815 74

ZDC鋅 CAD



TM-063D-1 75

RoHS SUS不鏽鋼 CAD



TM-063D-2 76

RoHS SUS不鏽鋼 CAD



TM-063D-3 76

RoHS SUS不鏽鋼 CAD



TM-063D-4 77

RoHS SUS不鏽鋼 CAD



TM-063D-6 77

RoHS SUS不鏽鋼 CAD



TM-063D-5 78

RoHS SUS不鏽鋼 CAD



TM-305 78

RoHS SUS不鏽鋼 CAD



TM-0815 79

RoHS ZDC鋅 CAD



TM-520 79

CAD



TM-824 80

ZDC鋅 CAD



TM-014 80

RoHS ZDC鋅 CAD



TM-1064 81

RoHS SUS不鏽鋼 CAD



TM-709 81

ZDC鋅 CAD



TM-5201 82

ZDC鋅 CAD



TM-657 82

RoHS ZDC鋅 CAD



TM-7053 83

ZDC鋅 CAD



TM-7141 84

ZDC鋅 CAD



TM-7142 84

ZDC鋅 CAD



TM-7143 85

RoHS SUS不鏽鋼 ZDC鋅 CAD



TM-7144 86

ZDC鋅 CAD



TM-019 87

ZDC鋅 CAD



TM-026 87

RoHS ZDC 鋅 CAD



TM-7146 88

ZDC 鋅 CAD



TM-7362 89

RoHS ZDC 鋅 CAD



TM-7530 90

CAD



TM-821 90

CAD



TM-813 91

ZDC 鋅 CAD



TM-8160 92

RoHS SUS 不鏽鋼 CAD



TM-812 92

ZDC 鋅 CAD



TM-8161 93

ZDC 鋅 CAD



TM-8162 94

ZDC 鋅 CAD



TM-8163 95

ZDC 鋅 CAD



TM-8164 96

RoHS SUS 不鏽鋼 CAD



TM-7360 96

ZDC 鋅 CAD



TM-8166 97

ZDC 鋅 CAD



TM-1003 98

RoHS ZDC 鋅 CAD



TM-1004 98

RoHS ZDC 鋅 CAD



TM-18 99

RoHS ZDC 鋅 CAD



TM-19 101

RoHS ZDC 鋅 CAD



TM-027 103

RoHS ZDC 鋅 CAD



TM-730 103

ZDC 鋅 CAD



TM-032 104

RoHS ZDC 鋅 CAD



TM-052 105

RoHS ZDC 鋅 CAD



TM-055 105

RoHS SUS 不鏽鋼 CAD



TM-053 106

RoHS ZDC 鋅 CAD



TM-082 107

RoHS ZDC 鋅 CAD



TM-241 107



TM-083B 108



TM-083W 108



TM-109 109



TM-066 109



TM-224 110



TM-118 110



TM-240 111



TM-7322 111



TM-242 112



TM-708 113



TM-719 113



TM-717 114



TM-718 115



TM-725 116



TM-1025 116



TM-726 117



TM-727 118



TM-731 119



TM-732 120



TM-860 120



TM-733 121



TM-800 122



TM-0411 122



TM-818 123



TM-710 124

RoHS ZDC 鋅 CAD



TM-828 125

RoHS ZDC 鋅 CAD



TM-713 125

ZDC 鋅 CAD



TM-843 126

RoHS ZDC 鋅 CAD



TM-850 127

RoHS SUS 不鏽鋼 ZDC 鋅 CAD



TM-870 128

RoHS SUS 不鏽鋼 ZDC 鋅 CAD



TM-2120 129

RoHS SUS 不鏽鋼 CAD



TM-102 129

RoHS ZDC 鋅 CAD



TM-2160 130

RoHS SUS 不鏽鋼 CAD



TM-2170 130

RoHS SUS 不鏽鋼 CAD



TM-2180 131

RoHS SUS 不鏽鋼 CAD



TM-2190 131

RoHS SUS 不鏽鋼 CAD



TM-100 132

ZDC 鋅 CAD



TM-200 132

CAD



TM-201 133

ZDC 鋅 CAD



TM-089 134

RoHS ZDC 鋅 CAD



TM-093 135

RoHS ZDC 鋅 CAD



TM-831 136

RoHS ZDC 鋅 CAD



TM-085 136

RoHS ZDC 鋅 CAD



TM-838 137

RoHS ZDC 鋅 CAD



TM-110 138

ZDC 鋅 CAD



TM-911 139

ZDC 鋅 CAD



TM-120 140

ZDC 鋅 CAD



TM-153 140

RoHS SUS 不鏽鋼 CAD



TM-112 141

RoHS CAD



TM-1627 141

RoHS SUS不鏽鋼 CAD



TM-106 142

RoHS ZDC鋅 CAD



TM-111 143

RoHS SUS不鏽鋼 CAD

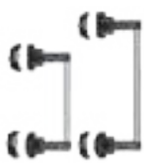

TM-1937 144

RoHS ZDC鋅 CAD



TM-078-4 145

RoHS ZDC鋅 CAD



TM-0418 146

RoHS ZDC鋅 CAD



TM-903 147

RoHS SUS不鏽鋼 CAD



TM-387 148

RoHS SUS不鏽鋼 CAD



TM-1593 149

RoHS SUS不鏽鋼 CAD



TM-837 150

RoHS SUS不鏽鋼 CAD



TM-8361 151

RoHS SUS不鏽鋼 CAD



TM-0440 152

RoHS ZDC鋅 CAD



TM-621 153

RoHS SUS不鏽鋼 ZDC鋅 CAD



TM-622 154

RoHS SUS不鏽鋼 CAD



TM-623 155

RoHS SUS不鏽鋼 CAD



TM-6189 156

RoHS ZDC鋅 CAD



TM-0412 157

RoHS CAD



TM-0318 158

RoHS ZDC鋅 CAD



TM-108 159

RoHS ZDC鋅 CAD



TM-232 160

RoHS ZDC鋅 CAD



TM-094 161

RoHS ZDC鋅 CAD



TM-081 161

RoHS ZDC鋅 CAD



TM-113 162

RoHS ZDC鋅 CAD



TM-114 162

RoHS ZDC鋅 CAD



TM-117 163

RoHS ZDC鋅 CAD



TM-116 163

RoHS ZDC鋅 CAD



TM-129 164

RoHS SUS不鏽鋼 CAD



TM-2119 164

RoHS SUS不鏽鋼 CAD



TM-2130 165

RoHS SUS不鏽鋼 CAD



TM-105 165

RoHS ZDC鋅 CAD



TM-2139 166

RoHS SUS不鏽鋼 CAD



TM-2140 166

RoHS SUS不鏽鋼 CAD



TM-3240 167

ZDC鋅 CAD



TM-160 167

RoHS SUS不鏽鋼 CAD



TM-52 168

RoHS SUS不鏽鋼 CAD



TM-6170 169

CAD



TM-0480 170

RoHS ZDC鋅 CAD



TM-1060 170

RoHS SUS不鏽鋼 CAD



TM-0511 171

RoHS ZDC鋅 CAD



TM-701 171

RoHS ZDC鋅 CAD



TM-904 172

RoHS SUS不鏽鋼 CAD



TM-1102 173

SUS不鏽鋼 CAD



TM-041 173

RoHS ZDC鋅 CAD



TM-0681 174

RoHS ZDC鋅 CAD



TM-778 175

RoHS ZDC鋅 CAD



TM-131 175

RoHS ZDC鋅 CAD



TM-1104 176

SUS不鏽鋼 CAD



TM-1103 176

SUS不鏽鋼 CAD



TM-1105 177

SUS不鏽鋼 CAD



TM-1106 177

SUS不鏽鋼 CAD



TM-1107 178

SUS 不鏽鋼 CAD



TM-1108 178

SUS 不鏽鋼 CAD



TM-073 179

RoHS ZDC 鋅 CAD



TM-075 179

RoHS ZDC 鋅 CAD



TM-076 180

RoHS ZDC 鋅 CAD



TM-077 180

RoHS SUS 不鏽鋼 CAD



TM-1011 181

RoHS SUS 不鏽鋼 CAD



TM-0460 181

RoHS SUS 不鏽鋼 CAD



TM-1178 182

ZDC 鋅 CAD



TM-711 182

ZDC 鋅 CAD

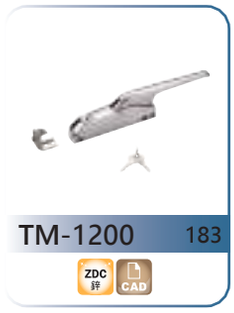

TM-1200 183

ZDC 鋅 CAD



TM-1201 183

ZDC 鋅 CAD



TM-1210 184

SUS 不鏽鋼 CAD



TM-1202 184

SUS 不鏽鋼 CAD



TM-1240 185

RoHS ZDC 鋅 CAD



TM-1250 185

RoHS ZDC 鋅 CAD



TM-8116 186

RoHS SUS 不鏽鋼 CAD



TM-2115 186

RoHS SUS 不鏽鋼 CAD



TM-8118 187

RoHS SUS 不鏽鋼 CAD



TM-2210 188

RoHS SUS 不鏽鋼 CAD



TM-079 189

RoHS ZDC 鋅 CAD



TM-6150 189

RoHS SUS 不鏽鋼 ZDC 鋅 CAD



TM-8113 190

RoHS ZDC 鋅 CAD



TM-8110 190

RoHS SUS 不鏽鋼 CAD



TM-8114 191

RoHS SUS 不鏽鋼 CAD



TM-0512 191

RoHS ZDC 鋅 CAD



TM-8115 192

SUS 不鏽鋼 CAD



TM-8117 192

SUS 不鏽鋼 CAD



TM-501 193

RoHS SUS 不鏽鋼 CAD



TM-124 194

RoHS CAD



TM-125 195

RoHS CAD



TM-128 196

SUS 不鏽鋼 CAD



TM-729 196

RoHS SUS 不鏽鋼 CAD



TM-132 197

SUS 不鏽鋼 CAD



TM-337 197

SUS 不鏽鋼 CAD



TM-135 196

SUS 不鏽鋼 CAD



TM-136 196

SUS 不鏽鋼 CAD



TM-137 199

SUS 不鏽鋼 CAD



TM-133 199

SUS 不鏽鋼 CAD



TM-138 200

SUS 不鏽鋼 CAD



TM-139 200

SUS 不鏽鋼 CAD



TM-140 201

RoHS CAD



TM-326 201

ZDC 鋅 CAD



TM-142 202

RoHS ZDC 鋅 CAD



TM-171 203

ZDC 鋅 CAD



TM-80&TM-90 203

RoHS SUS 不鏽鋼 ZDC 鋅 CAD



TM-270 204

RoHS ZDC 鋅 CAD



TM-122 204

RoHS ZDC 鋅 CAD



TM-150 205

RoHS ZDC 鋅 CAD



TM-123 205

RoHS ZDC 鋅 CAD



TM-318 206

CAD



TM-127 206

RoHS SUS不鏽鋼 CAD



TM-325 207

CAD



TM-141 207

RoHS ZDC鋅 CAD



TM-350 208

RoHS SUS不鏽鋼 CAD



TM-335 209

RoHS SUS不鏽鋼 CAD



TM-071 209

RoHS ZDC鋅 CAD



TM-338 210

SUS不鏽鋼 CAD



TM-134 210

SUS不鏽鋼 CAD



TM-0415 211

RoHS SUS不鏽鋼 CAD



TM-1894 212

RoHS CAD



TM-5008 213

RoHS CAD



TM-611-2 214

RoHS SUS不鏽鋼 CAD



TM-511-2 214

RoHS SUS不鏽鋼 CAD



TM-078 168

RoHS SUS不鏽鋼 ZDC鋅 CAD



TM-845 75

RoHS ZDC鋅 CAD



OH-727 216

RoHS SUS不鏽鋼 CAD



OH-1238 217

RoHS SUS不鏽鋼 CAD



OH-034-1 218

RoHS SUS不鏽鋼 CAD



OH-034-2 218

RoHS SUS不鏽鋼 CAD



OH-306 219

RoHS SUS不鏽鋼 CAD



OH-2057 219

RoHS SUS不鏽鋼 CAD



OH-226-4-1 220

RoHS ZDC鋅 CAD



OH-226-4-2 220

RoHS ZDC鋅 CAD



OH-226-5 221

RoHS ZDC鋅 CAD



OH-226-6 221

RoHS ZDC鋅 CAD



OH-209 222

RoHS ZDC鋅 CAD



OH-030 222

ZDC鋅 CAD



OH-011 223

RoHS ZDC鋅 CAD



OH-2126 223

RoHS SUS不鏽鋼 CAD



OH-1078 224

RoHS SUS不鏽鋼 CAD



OH-1075 224

RoHS SUS不鏽鋼 CAD



OH-1369 225

RoHS SUS不鏽鋼 CAD



OH-046 225

CAD



OH-5065 226

RoHS SUS不鏽鋼 CAD



OH-043 227

RoHS SUS不鏽鋼 CAD



OH-2060 227

RoHS SUS不鏽鋼 CAD



OH-2017 228

RoHS SUS不鏽鋼 CAD



OH-2019 228

RoHS SUS不鏽鋼 CAD



OH-8059 229

RoHS SUS不鏽鋼 CAD



OH-2018 229

RoHS SUS不鏽鋼 CAD



OH-2063 290



OH-2058 290



OH-282 291



OH-219 292



OH-300 292



OH-197 233



OH-1371 234



OH-272 235



OH-95 236



OH-275 236



OH-236 237



OH-714 238



OH-117-1 239



OH-117-2 239



OH-117-3 240



OH-117-4 240



OH-117-5 241



OH-117-6 241



OH-117-7 242



OH-117-8 242



OH-041 243



OH-042 243



OH-195 244



OH-736 245



OH-208 245



OH-845 246

CAD



OH-848 247

CAD



OH-851 247

CAD



OH-846 248

CAD



OH-849 249

CAD



OH-850 249

CAD



OH-135 250

CAD



OH-90 251

RoHS SUS不鏽鋼 CAD



OH-737 252

RoHS SUS不鏽鋼 CAD



OH-220B 252

RoHS ZDC鋅 CAD



OH-1064 253

RoHS SUS不鏽鋼 CAD



OH-260 253

CAD



OH-218 254

ZDC鋅 CAD



OH-227 254

RoHS SUS不鏽鋼 ZDC鋅 CAD



OH-277 255

RoHS SUS不鏽鋼 ZDC鋅 CAD



OH-3537 255

RoHS SUS不鏽鋼 CAD



OH-2054-1 256

RoHS SUS不鏽鋼 CAD



OH-2054-2 256

RoHS SUS不鏽鋼 CAD



OH-192 257

RoHS SUS不鏽鋼 CAD



OH-2130 257

RoHS SUS不鏽鋼 CAD



OH-302 258

RoHS SUS不鏽鋼 CAD



OH-0217 258

RoHS SUS不鏽鋼 CAD



OH-0336 259

RoHS SUS不鏽鋼 CAD



OH-0337 259

CAD



OH-3046 260

SUS不鏽鋼 CAD



OH-3055 260

SUS不鏽鋼 CAD



OH-005 261

RoHS ZDC鋅 CAD



OH-223 261

ZDC鋅 CAD



OH-506 262

RoHS SUS不鏽鋼 CAD



OH-222 262

ZDC鋅 CAD



OH-040 263

RoHS SUS不鏽鋼 CAD



OH-045 263

CAD



OH-735 264

RoHS SUS不鏽鋼 CAD



OH-255 264

ZDC鋅 CAD



OH-033 265

RoHS CAD



OH-401 265

RoHS SUS不鏽鋼 CAD



OH-0221 266

ZDC鋅 CAD



OH-193 266

RoHS SUS不鏽鋼 CAD



OH-1727 267

RoHS SUS不鏽鋼 CAD



OH-207 267

ZDC鋅 CAD



OH-2719 268

RoHS SUS不鏽鋼 ZDC鋅 CAD



OH-2715 268

RoHS SUS不鏽鋼 ZDC鋅 CAD



OH-231 269

RoHS SUS不鏽鋼 CAD



OH-234 269

RoHS SUS不鏽鋼 ZDC鋅 CAD



OH-225 270

ZDC鋅 CAD



OH-2720 270

RoHS SUS不鏽鋼 CAD



OH-229 271

ZDC鋅 CAD



OH-002 272

RoHS SUS不鏽鋼 ZDC鋅 CAD



OH-230 273

ZDC鋅 CAD



OH-250 273

CAD



OH-213 274



OH-228 274



OH-211 275



OH-212 275



OH-204 276



OH-2022 276



OH-205 277



OH-203 273



OH-733 279



OH-730 279



OH-731 280



OH-732 280



OH-130 281



OH-712 281



OH-215 282



OH-0210 282



OH-14282 283



OH-2065 283



OH-0215 284



OH-331 284



OH-0216 285



OH-217 285



OH-0213 286



OH-0214 286



OH-0218 287



OH-0219 287



OH-3019 288



OH-1460 288



OH-0211 289



OH-178 289



OH-055 290



OH-056 290



OH-057 291



OH-206 291



OH-061 292



OH-059 292



OH-036 293



OH-054 293



OH-037 294



OH-047 294



OH-058 295



OH-080 295



OH-053 296



OH-2810 296



OH-265 297

OH-257 297



OH-2408 298



OH-201 300



OH-202 301



OH-226 301



OH-256 302

RoHS SUS不鏽鋼 CAD



OH-254 303

RoHS ZDC鋅 CAD



OH-253 304

ZDC鋅 CAD



OH-1005 304

RoHS SUS不鏽鋼 CAD



OH-1004 305

RoHS SUS不鏽鋼 CAD



OH-0332 306

ZDC鋅 CAD



OH-221 306

ZDC鋅 CAD



OH-044 307

CAD



OH-0331 307

RoHS ZDC鋅 CAD



OH-1206 308

RoHS SUS不鏽鋼 CAD



OH-004 234

RoHS ZDC鋅 CAD



OH-847 248

CAD



HG-001 310



HG-027 310



HG-0120 311



HG-053 312



HG-076 312



HG-171 313



HG-172 313



HG-181 314



HG-182 315



HG-183 316



HG-184 317



HG-185 318



HG-186 319



HG-187 320

TH-010 322

ZDC 鋅 CAD

TH-30 322

RoHS CAD

TH-C 323

RoHS SUS 不鏽鋼 CAD



JT-M3-G 326

CAD



JT-M4-Y 326

CAD



JT-M5-Y 326

CAD



JT-M6-Y 327

CAD



JT-M8-Y 327

CAD



JT-002 327

CAD



JT-001 328

CAD



JT-064 328

CAD



JT-009 329

CAD



JT-050 329

CAD



JT-048 329

CAD



JT-201 330

CAD

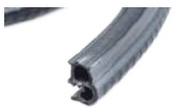

JT-202 330

CAD



LZ-91 332



LZ-93 333



LZ-15 336



LZ-010 338



LZ-1012 339



LZ-53 339



LZ-202 340



LZ-2011 341



LZ-1025 341



LZ-1060 341



LZ-2010 342



LZ-1050 342



LZ-2031 343



LZ-1090 343



LZ-2062 344



LZ-001 345



LZ-7011 345



LZ-9015 345



LZ-421 346



LZ-403 347



LZ-404 347



LZ-405 348



LZ-406 348



LZ-42-4 349



LZ-204 349



LZ-1011 350



LZ-1021 350



LZ-103 351



LZ-104 351



LZ-105 352



LZ-106 352



LZ-107 353



LZ-112 353



LZ-108 354



LZ-109 354



LZ-110 355



LZ-111 355



LZ-10 355



LZ-201 356



LZ-203 357



LZ-205 357



LZ-113 358



LZ-114 358



LZ-206 358



LZ-50 344



LZ-1020 340



LZ-2061 344


TG-549 360


TG-001 361


TG-002 361


TG-3305 362


TG-2405 362


TG-2406 362


TG-2409 363


TG-2410 363


TG-625 363


TG-2401 364


TG-3303 364


TG-3304 364


TG-2407 365


TG-2408 365

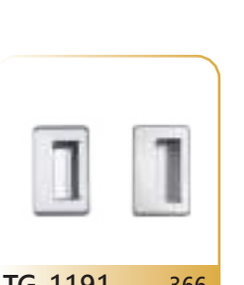
TG-1191 366


TG-2402 366

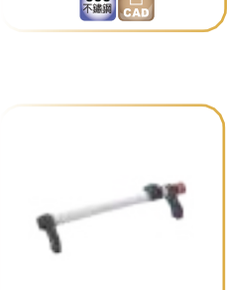
TG-332 367

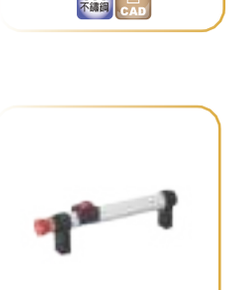
TG-331 368


TG-738 368

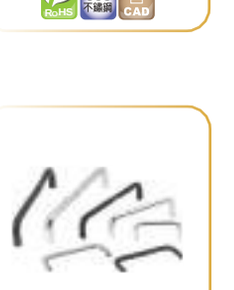
TG-300 369

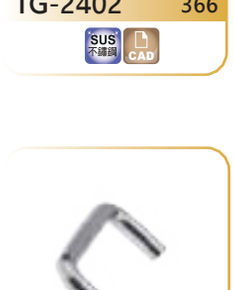
TG-511 370

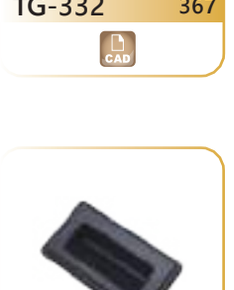
TG-4001 372

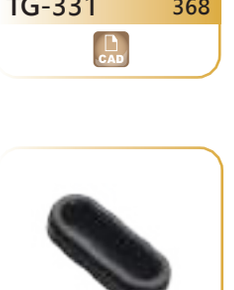
TG-1029 5372

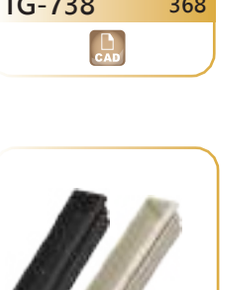
TG-004 373


TG-005 373



TG-518 374

ZDC 鋅 CAD



TG-746 374

CAD



TG-006-1 375

RoHS CAD



TG-006-2 375

RoHS CAD



TG-739 376

RoHS CAD



TG-053 376

RoHS SUS 不鏽鋼 CAD



TG-1024 377

RoHS CAD



TG-045 377

RoHS SUS 不鏽鋼 CAD



TG-048 377

RoHS SUS 不鏽鋼 CAD



TG-692 378

CAD



TG-003 378

CAD



TG-693 379

CAD



TG-691 379

CAD



TG-223 380

RoHS CAD



TG-225 380

RoHS CAD



TG-1026 381

RoHS CAD



TG-1040 381

RoHS CAD



TG-174 382

RoHS ZDC 鋅 CAD



TG-745 382

CAD



TG-8080 383

RoHS SUS 不鏽鋼 CAD



TG-735 383

CAD



TG-516-4 384

RoHS CAD



TG-1054 384

RoHS CAD



TG-741 385

CAD



TG-749 385

CAD



TG-043 386

RoHS CAD



TG-050 386

RoHS SUS不鏽鋼 CAD



TG-2081 387

RoHS SUS不鏽鋼 CAD



TG-2810 387

RoHS SUS不鏽鋼 CAD



TG-2083 388

RoHS SUS不鏽鋼 CAD



TG-2082 388

RoHS SUS不鏽鋼 CAD



TG-2066 389

RoHS SUS不鏽鋼 CAD



TG-2068 389

RoHS SUS不鏽鋼 CAD



TG-632 390

CAD



TG-630 391

CAD



TG-631 391

ZDC鋅 CAD



TG-620 391

CAD



TG-622-1 392

RoHS ZDC鋅 CAD



TG-627 392

RoHS CAD



TG-609 393

RoHS SUS不鏽鋼 CAD



TG-3401 393

SUS不鏽鋼 CAD



TG-9001 393

RoHS SUS不鏽鋼 CAD



TG-602 394

RoHS SUS不鏽鋼 CAD



TG-608 394

RoHS SUS不鏽鋼 CAD



TG-601 395

RoHS SUS不鏽鋼 CAD



TG-611 396

RoHS SUS不鏽鋼 CAD



TG-623 396

RoHS ZDC鋅 CAD



TG-052 397

RoHS SUS不鏽鋼 CAD



TG-2312 397

RoHS SUS不鏽鋼 CAD



TG-326 326

RoHS SUS不鏽鋼 CAD



TG-6320 399



TG-0311-160-S 399



TG-507 400



TG-513 401



TG-532 402



TG-547 403



TG-534 403



TG-575 404



TG-566 404



TG-539 405



TG-538 405



TG-546 406



TG-542 406



TG-540 407



TG-545 407



TG-537 408



TG-541 408



TG-536 409



TG-543 409



TG-520 410



TG-526 410



TG-533 411



TG-504 412



TG-515 412



TG-512 413



TG-508 414



TG-509 414



TG-506 415



TG-503 416



TG-505 416



TG-525 417



TG-535 417



TG-522 418



TG-523 418



TG-521 419



TG-519 420



TG-531 420



TG-517 421



TG-502 422



TG-516 423



TG-556 424



TG-576 424



TG-605 425



TG-606 425



TG-743 426



TG-757 426



TG-329 427



TG-7375 427



TG-7373 428



TG-7374 428



TG-1746 429

CAD



TG-777 429

CAD



TG-748 430

CAD



TG-750 430

RoHS SUS不鏽鋼 CAD

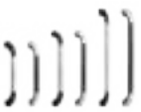

TG-1039 431

RoHS CAD



TG-516-5 431

RoHS CAD



TG-224 432

RoHS ZDC鋅 CAD



TG-1395 432

SUS不鏽鋼 CAD



DK-052 434



DK-053 434



DK-2055 435



DK-2053 435



DK-044 436



DK-156 436



DK-2011 437



DK-180 437



DK-8042 438



DK-159 438



DK-050 439



DK-056 439



DK-8111 440



DK-055 440



DK-021 441



DK-56-B 441



DK-200 442



DK-124 442



DK-022 443



DK-151 444



DK-152 445



DK-153 445



DK-225 446



DK-8019-6 447



DK-126 447



DK-127 448



DK-128 448



DK-129 449



DK-8020H-1 449



DK-8020H-2 450



DK-8020H-3 450



DK-8020H-4 451



DK-8020H-7 451



DK-8020H-8 452



DK-8020H-5 452



DK-8020H-10 453



DK-8021Z-1 453



DK-8020H-11 454



DK-8021Z-2 454



DK-8020H-12 455



DK-8021Z-3 455



DK-1005 456



DK-8021Z-4 456



DK-8022 457



DK-1012 458



DK-150 458



DK-1002 459



DK-1003 459



DK-004 460



DK-005 460



DK-1009 461



DK-1006 461



DK-101 461



DK-1007 462



DK-1008 462



HS-P-4 463



DK-17 463



DK-8001 464



DK-8002 464



DK-8003 465



DK-8004 465



DK-8031 466



DK-8027 466



DK-605 466



DK-054 467



DK-057 467



DK-061 468



DK-145 469



DK-146 470



DK-163 471



DK-010 471



DK-168 473

DK-10395 473



DK-029 472



DK-169 472



DK-8009 476

RoHS SUS不鏽鋼 CAD



DK-8053 476

RoHS SUS不鏽鋼 CAD



DK-1101 474

SUS不鏽鋼 CAD



DK-1201 474

SUS不鏽鋼 CAD



DK-1202 474

SUS不鏽鋼 CAD



DK-1204 475

SUS不鏽鋼 CAD



DK-1205 475

SUS不鏽鋼 CAD



DK-1203 475

SUS不鏽鋼 CAD



DK-8015 477

RoHS SUS不鏽鋼 CAD



DK-8016 483

RoHS SUS不鏽鋼 CAD



DK-8006 478

RoHS SUS不鏽鋼 CAD



DK-100 479

RoHS ZDC鋅 CAD



DK-6021 479

RoHS SUS不鏽鋼 CAD



DK-6022 480

CAD



DK-6023 480

CAD



DK-321 481

RoHS SUS不鏽鋼 CAD



DK-140 481

RoHS SUS不鏽鋼 CAD



DK-3071 482

RoHS SUS不鏽鋼 CAD



DK-1516 482

RoHS SUS不鏽鋼 CAD



DK-8052 494

RoHS SUS不鏽鋼 CAD



DK-326 494

RoHS SUS不鏽鋼 CAD



DK-120 484

RoHS SUS不鏽鋼 CAD



DK-130 486

RoHS SUS不鏽鋼 CAD



DK-110 487

RoHS SUS不鏽鋼 CAD



DK-33 487

RoHS SUS不鏽鋼 CAD



DK-323 488



DK-8023S-1 488



DK-3061 489



DK-3110 489



DK-8026 490



DK-8070 490



DK-8028 491



DK-8050 491



DK-8033 492



DK-8051 493



DK-8066 493



DK-8057 495



DK-8056 495



DK-8071 495



DK-8058 496



DK-8059 496



DK-8060-1 496



DK-8060-2 497



DK-8062 497



DK-8061 497



DK-8068 498



DK-8072 498



DK-8069 498



JZ-001 500



JZ-015 500



JZ-135 501



JZ-002 501



JZ-1003 502



JZ-003 502



JZ-004 503



JZ-011 504



JZ-35 505



JZ-1505 505



JZ-080 506



JZ-081 506



JZ-082 507



JZ-083 507



JZ-102 508



JZ-106 509



JZ-108 509



JZ-130 510



JZ-132 511



JZ-1012 511



JZ-1023 512



JZ-1327 512



JZ-1308 513



JZ-1310 513



JZ-1309 514



JZ-1321 514



JZ-1318 515



JZ-1320 515



JZ-1319 516



JZ-1307 516



JZ-1322 517



JZ-103 517



JZ-1326 518



JZ-1405 519



JZ-40 520



JZ-200 521



JZ-201 521



JZ-202-2S 522



JZ-202-2R 522



JZ-202-2H 522



JZ-202-1S 522



JZ-202-1H 522



JZ-202-3H 522



JZ-202-3S 522



JZ-203-1S 523



JZ-203-1R 523



JZ-203-2H 523



JZ-203-2S 523



JZ-203-2H 523



JZ-203-3H 523



JZ-204-1S 525



JZ-204-1R 525



JZ-204-1H 525



JZ-204-2S 525



JZ-204-2H 525



JZ-204-3H 525



JZ-204-3S 525



JZ-205-1S 526



JZ-205-1R 526



JZ-205-1H 526



JZ-205-2S 525



JZ-205-2H 525



JZ-205-3H 525



JZ-205-3S 525



JZ-206-1S 527



JZ-206-1R 527



JZ-206-1H 527



JZ-206-2S 527



JZ-206-2H 527



JZ-206-3H 527



JZ-206-3S 527



JZ-303-1S 529



JZ-303-1R 529



JZ-303-1H 529



JZ-303-1G 529


JZ-303-2S 529
CAD


JZ-303-2H 529
CAD


JZ-303-2G 529
CAD


JZ-303-2D 529
CAD


JZ-303-3S 529
CAD


JZ-303-3H 529
CAD


JZ-303-3G 529
CAD


JZ-303-3D 529
CAD


JZ-304-1S 531
CAD


JZ-304-1R 531
CAD


JZ-304-1H 531
CAD


JZ-304-1G 531
CAD


JZ-304-1D 531
CAD


JZ-304-2S 531
CAD


JZ-304-2H 531
CAD


JZ-304-2G 531
CAD


JZ-304-2D 531
CAD


JZ-304-3S 531
CAD


JZ-304-3H 531
CAD


JZ-304-3G 531
CAD


JZ-304-3D 531
CAD


JZ-305-1S 533
CAD


JZ-305-1R 533
CAD


JZ-305-1H 533
CAD


JZ-305-1G 533
CAD


JZ-305-1D 533 CAD


JZ-305-2S 533 CAD


JZ-305-2H 533 CAD


JZ-305-2G 533 CAD


JZ-305-2D 533 CAD


JZ-305-3S 533 CAD


JZ-305-3H 533 CAD


JZ-305-3G 533 CAD


JZ-305-3D 533 CAD


JZ-306-1S 535 CAD


JZ-306-1R 535 CAD


JZ-306-1H 535 CAD


JZ-306-1G 535 CAD


JZ-306-1K 535 CAD


JZ-306-1D 535 CAD


JZ-306-2S 535 CAD


JZ-306-2H 535 CAD


JZ-306-2G 535 CAD


JZ-306-2D 535 CAD


JZ-306-3S 535 CAD


JZ-306-3H 535 CAD


JZ-306-3G 535 CAD


JZ-306-3D 535 CAD


JZ-408-1S 537 SUS不鏽鋼 CAD


JZ-408-1R 537 SUS不鏽鋼 CAD



JZ-408-1H 537

SUS不鏽鋼 CAD



JZ-408-1G 537

SUS不鏽鋼 CAD



JZ-408-2S 537

SUS不鏽鋼 CAD



JZ-408-2H 537

SUS不鏽鋼 CAD



JZ-408-2G 537

SUS不鏽鋼 CAD



JZ-428-S 538

CAD



JZ-428-R 538

CAD



JZ-428-I 538

CAD



JZ-430-S 540

CAD



JZ-430-R 540

CAD



JZ-430-I 540

CAD



JZ-429-S 539

CAD



JZ-429-R 539

CAD



JZ-429-I 539

CAD



JZ-431-S 539

CAD



JZ-431-R 539

CAD



JZ-431-I 539

CAD



JZ-432-S 541

CAD



JZ-432-R 541

CAD



JZ-432-I 541

CAD



JZ-433-S 542

SUS不鏽鋼 CAD



JZ-433-R 542

SUS不鏽鋼 CAD



JZ-433-I 542

SUS不鏽鋼 CAD



JZ-434-S 542

SUS不鏽鋼 CAD



JZ-434-R 542

SUS不鏽鋼 CAD



JZ-434-I 542



JZ-510-S 543



JZ-510-R 543



JZ-510-D 543



JZ-510-J 543



JZ-504-1S 544



JZ-504-1R 544



JZ-504-1K 544



JZ-504-2D 544



JZ-504-2S 544



JZ-504-2K 544



JZ-504-3D 544



JZ-504-3S 544



JZ-504-3K 544



JZ-504-3D 544



JZ-505-1S 546



JZ-505-1R 546



JZ-505-1K 546



JZ-505-1D 546



JZ-505-2S 546



JZ-505-2K 546



JZ-505-2D 546



JZ-505-3S 546



JZ-505-3K 546



JZ-505-3D 546



JZ-506-1S 547 CAD



JZ-506-1R 547 CAD



JZ-506-1K 547 CAD



JZ-506-1D 547 CAD



JZ-506-2S 547 CAD



JZ-506-2K 547 CAD



JZ-506-2D 547 CAD



JZ-506-3S 547 CAD



JZ-506-3K 547 CAD



JZ-506-3D 547 CAD



JZ-507-S 549 CAD



JZ-507-R 549 CAD



JZ-507-D 549 CAD



JZ-507-J 549 CAD



JZ-508-S 549 CAD



JZ-508-R 549 CAD



JZ-508-D 549 CAD



JZ-508-J 549 CAD



JZ-509-S 550 CAD



JZ-509-R 550 CAD



JZ-509-D 550 CAD



JZ-509-J 550 CAD



JZ-605 551 CAD



JZ-615-1 551 CAD



JZ-615-2 554 SUS不鏽鋼 CAD

門鎖
合頁
滑軌 氣壓棒
彈簧 配件
膠條
螺桿 螺絲
把手
搭扣 磁鐵
腳輪 腳座
警示燈 工具燈



JZ-615-3 554

SUS 不銹鋼 CAD



JZ-612 552

CAD



JZ-618-1 552

CAD



JZ-168 553

CAD



JZ-618-2 553

CAD



JZ-616-R 555

CAD



JZ-616-S 555

CAD



JZ-616-D 555

CAD



JZ-617-R 556

CAD



JZ-617-S 556

CAD



JZ-617-D 556

CAD



JZ-620 557

CAD



JZ-602-1R 557

CAD



JZ-602-1S 557

CAD



JZ-602-2S 557

CAD



JZ-625-1 558

CAD



JZ-625-2 558

CAD



JZ-625-3 558

CAD



JZ-728-R 560

CAD



JZ-728-S 560

CAD



JZ-728-I 560

CAD



JD-1088

CAD



JD-1089.JD-1090

CAD



JD-1095

CAD



JD-2021

CAD



JD-2022

CAD



JD-3059

CAD



JD-2023

CAD



JD-1091

CAD



JD-3058

CAD

Locks & Catches TM
門鎖

Locks & Catches TM
門鎖

Locks & Catches TM
門鎖

Locks & Catches TM
門鎖

Locks & Catches TM
門鎖

按壓式平面把手

TM-2172

Pressed flat handle



商品介紹:

- 材質:不鏽鋼316脫臘鑄造
- 表面處理:鏡面拋光
- 用途:配電盤、制御盤部品

Product description:

- Material: Stainless steel 316 dewaxing casting
- Surface treatment: Mirror polishing
- Uses: Switchboard, control disc parts.

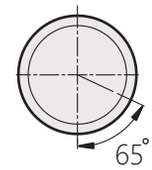

迴轉角度65°

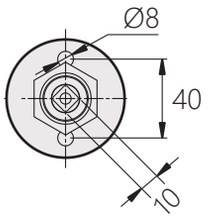

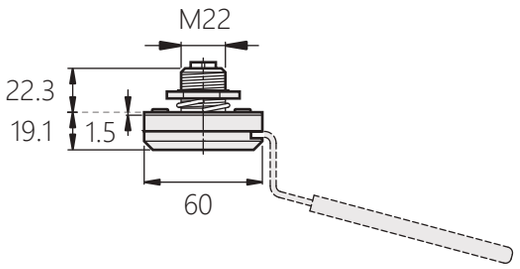

壓縮門扣

TM-172

Compression latch



商品介紹:

- 調整與門板安裝的基座方向可實現左右開門兼用
- 配有密封防水膠
- 配通用扳
- 表面處理:鍍亮鉻
- 材質:不鏽鋼、鋅合金
- 用途:配電盤、配電箱、空壓機、工業配套
- 備註:扳手在撬動的同時旋轉扳手從而開啟

Product description:

- Adjusting the direction of the base mounted on the door panel can be used for both left and right doors.
- With sealed waterproof glue
- With universal wrench
- Surface treatment: Bright chrome plating
- Material: SUS304,Zinc alloy
- Application: Switchboard, switchboard, air conditioner, industrial distribution.
- Uses: Communication cubicle, Control Panel, Cabinet Door,Machinery Equipment.
- Note: Active and simultaneous simultaneous turning procedure.

［TM-172-1-1］

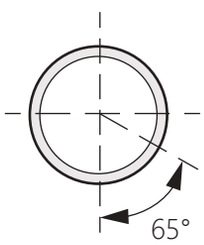

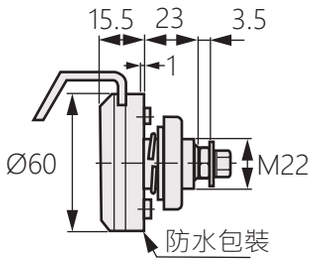

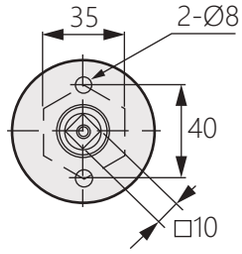

開孔尺寸

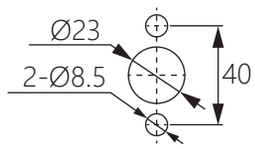

按壓式平面把手

TM-172

RoHS SUS不鏽鋼 ZDC鋅 CAD

［TM-172-2-1］

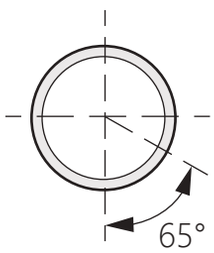

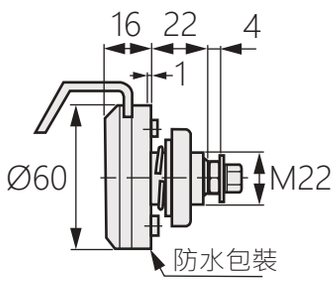

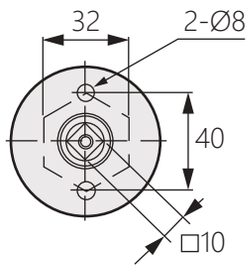

開孔尺寸

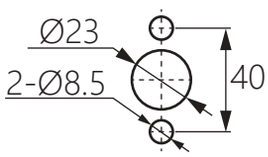

［TM-172-2-2］

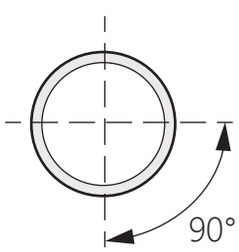

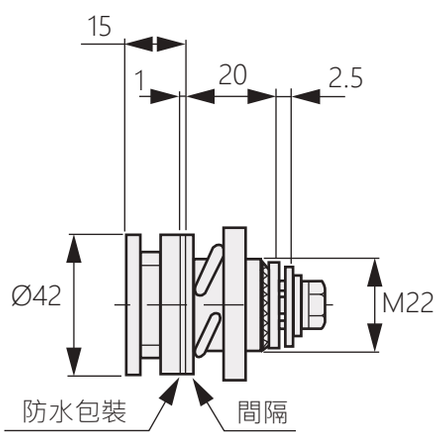

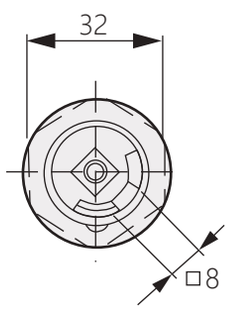

開孔尺寸

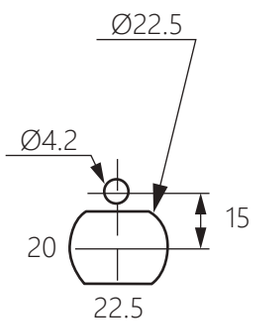

［TM-172-2-3］

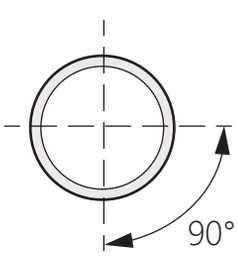

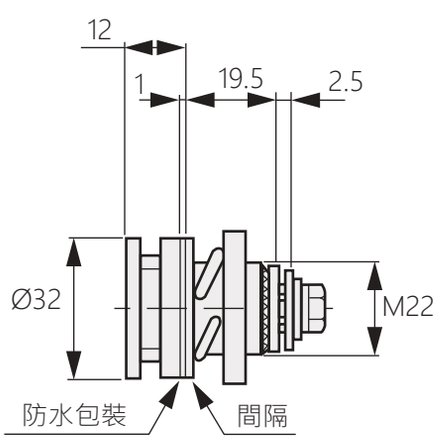

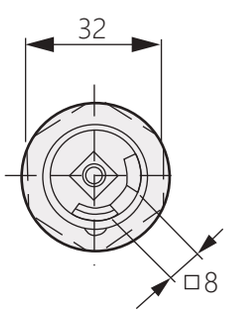

開孔尺寸

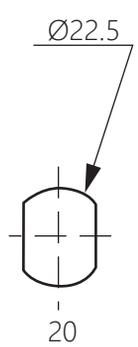

商品型號	材質
TM-172-1-1	不鏽鋼
TM-172-2-1	鋅合金
TM-172-2-2	
TM-172-2-3	

防塵電櫃鎖圓頭鎖 TM-013

Dust-proof electric cabinet lock round head lock



商品介紹:
- 鎖芯帶防塵蓋
- 配有密封防水膠墊
- 可選鎖片:兩款
- 材質:鋅合金
- 表面處理:鍍亮鉻
- 用途:機櫃、自動售貨機、娛樂設備

Product description:
- Cylinder with dust cover
- With sealed waterproof pad
- Optional lock: Two
- Material: Zinc alloy
- Surface treatment: Bright chrome plating
- Uses: Cabinets, vending machines, entertainment equipment.

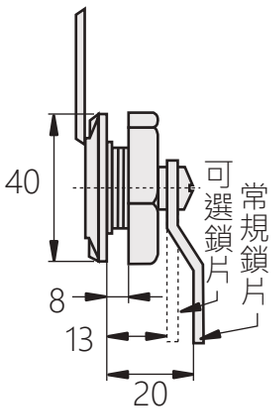

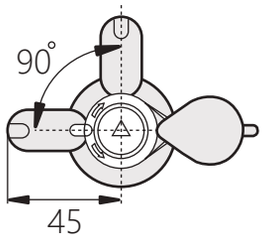

可選鎖片

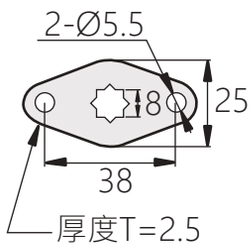

開孔尺寸

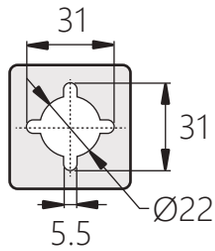

防盜型圓管鎖 TM-8510

Cam Lock-Anti-Thief



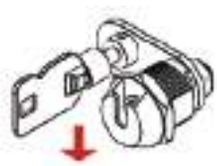



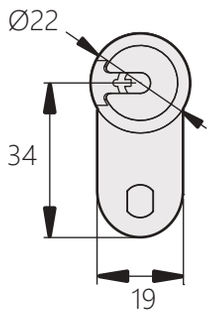

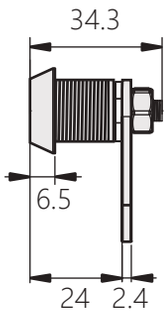

商品介紹:
- 鑰匙無法由正面直接插入，加強防盜破壞性能
  關閉狀態時，鑰匙才可抽出，避免使用者忘記關門
  可提供雜號鎖芯組合 (訂製生產)，常規品為同號鎖芯
- 材質:主體 - 銅、門擋片 - 鐵
- 表面處理:主體 - 鍍鉻、門擋片 - 鍍鎳
- 用途:機械設備、戶外箱體、配分電盤、控制箱

Product description:
- The key can't be inserted directly, Strengthen the Thief-Proof function.
  When door close, the key can be taken out, prevent the user forget to close the door.
  Can customize different Key No, Standard products are same Key No.
- Material: Base-Copper ; Cam-Steel
- Surface treatment: Base-Electroplated With Chrome ; Cam-Electroplated With Nickel
- Uses: Vending machines, outdoor power/distribution boards and control boards.

開孔尺寸

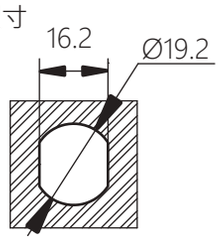

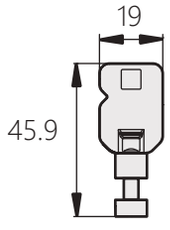

回壓圓頭鎖

TM-0450

Back pressure round head lock



商品介紹:

- 鎖芯內配防水圈，鎖殼配防水墊，密封防水性強
- 鎖芯內配有防水圈，鎖殼配有防水蓋
- 材質:鋅合金
- 表面處理:鍍亮鉻
- 用途:控制箱、電力箱、機箱機櫃
- 備註:一字鎖芯和三角鎖芯不鏽鋼材質產品為訂製品

Product description:

- The lock core is equipped with a waterproof ring, the lock shell is equipped with a waterproof pad, and the seal is waterproof.
- The lock core is equipped with a waterproof ring, and the lock shell is equipped with a waterproof cover.
- Material: Zinc alloy
- Surface treatment: Bright chrome plating
- Uses: Control box, power box, chassis cabinet.
- Note: Straight lock cylinder and triangular lock cylinder stainless steel products are customized products.

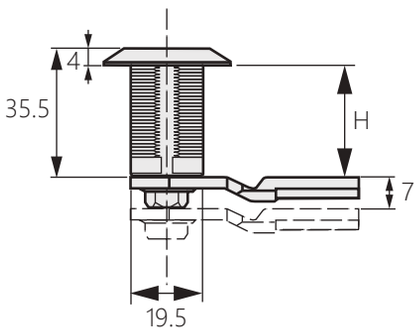

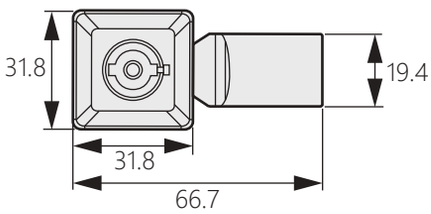

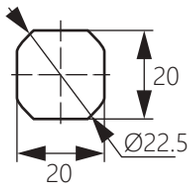

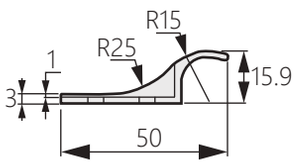

配件

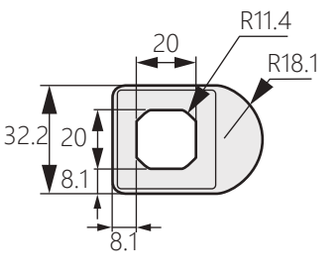

鎖片型號	H
TH-088	32.7
TH-488	37.4
TH-788	39.2
TH-1488	46.5

圓頭鎖

TM-1002

Cam lock



商品型號	
有鎖	無鎖
TM-1002-1	TM-1002-2

商品介紹:

- 具有密封防水功能
- 材質:主體-鋅合金(ZDC)、檔片-冷軋鋼板(SPCC)
- 表面處理:孔雀綠、環保鋅
- 用途:電箱、網絡機櫃、通信機櫃

Product description:

- With waterproof sealing
- Material: Body-Zinc Alloy (ZDC), Pawl-Cold-roll steel
- Surface treatment: Malachite green, Environmentally Friendly Zinc
- Uses: Electrical box, Network cabinet, communication cabinet

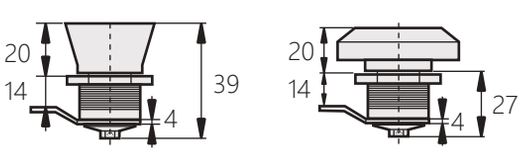

〔TM-1002-1〕

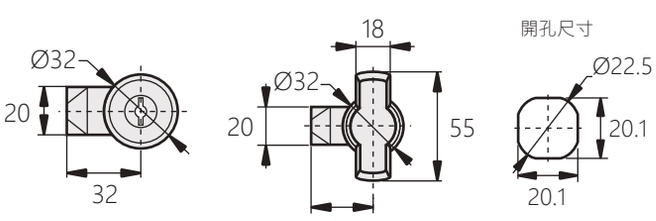

〔TM-1002-2〕

圓頭鎖 TM-092

Cam lock



商品介紹:

- 內部為彈簧裝置，即使有振動也不影響鎖的功能
- 材質:主體-鋅合金(ZDC)、檔片-冷軋鋼板
- 表面處理:鍍沙鉻
- 用途:機箱機櫃、控制箱、電力箱
- 備註:可選用不同鎖片

Product description:

- Innerspring structure and without impact even vibration
- Material: Body-Zinc Alloy (ZDC), Pawl-Cold-roll steel
- Surface treatment: Sand chrome plated
- Uses: Chassis cabinet, distribution box, meter box.
- Note: Different cam can be selected

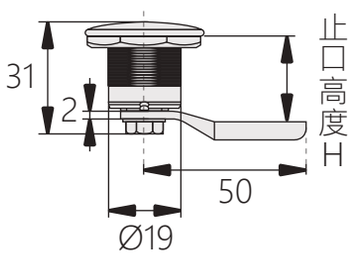

一字鎖芯

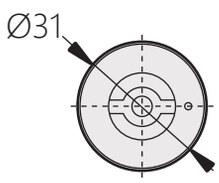

開孔尺寸

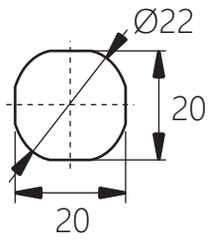

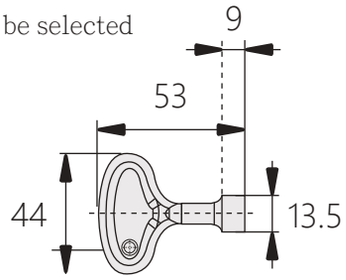

鎖片型號	H
TH-088	17.9
TH-488	22.56
TH-788	24.4
TH-1488	31.7

圓頭鎖 TM-095

Cam lock



商品介紹:

- 具有密封防水功能
- 多種鎖片及止口高度，適合多種門厚
- 材質:鋅合金(ZDC)
- 表面處理:黑色烤漆或鍍亮鉻
- 用途:機箱機櫃、控制箱、電力箱、戶外櫃
- 備註:可加裝掛鎖

Product description:

- With waterproof sealing
- A variety of cam pieces and stop height, suitable for a variety of door thickness
- Material: Zinc Alloy (ZDC)
- Surface treatment: Black paint or bright chrome
- Uses: Chassis cabinet, control box, power box, outdoor cabinet.
- Note: Padlock can be added

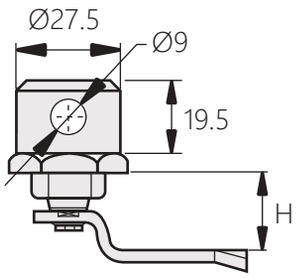

開孔尺寸

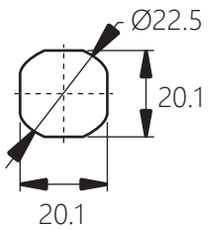

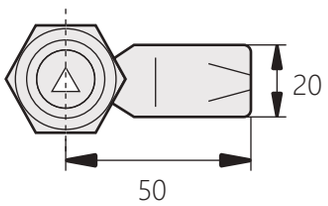

商品型號		鎖芯形狀
黑色烤漆	鍍亮鉻	
TM-095-1B	TM-095-1W	一字鎖芯
TM-095-2B	TM-095-2W	三角鎖芯
TM-095-3B	TM-095-3W	六角鎖芯

鎖片型號	止口高度H
TH-088	18
TH-488	22.7
TH-788	24.5
TH-1488	31.8

安裝示意圖



交通箱鎖 TM-836

Cylinder Locks with Lathes



商品介紹:

- 轉動鑰匙，門擋回縮8mm，內建彈簧，鑰匙與門擋會自動回到原始位置
- 表面處理:鎖芯、門擋-鍍鉻
- 材質:基座-不鏽鋼、鎖芯-鋅合金 (ZDC) 與銅、門擋-鋅合金
- 用途:機械設備、戶外箱體、配分電盤、控制箱

Product description:

- Turning the key moves the Cam 8mm. With builtin spring, key returns to position where it can be inserted/removed.
- Material: Base-Stainless Steel ; Lock-Zinc Alloy (ZDC)& Copper ; Cam-Zinc Alloy (ZDC)
- Surface treatment: Lock、Cam-Electroplated With Chrom
- Uses: Vending machines, outdoor power/distribution boards and control boards.

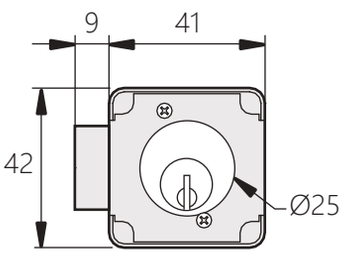

開孔尺寸

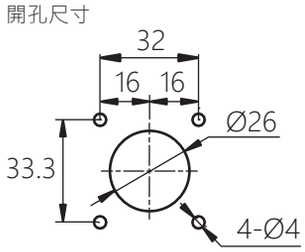

安裝示意圖

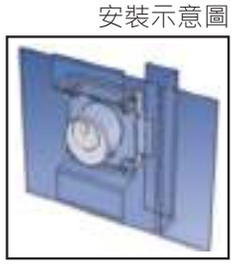

防水迫緊門扣 TM-820

Rotation Type Compression Latch



商品介紹:

- 適用於防震動、密封、高品質的組件，能快速安全關閉門板。迫緊動作可將門板及門框拉緊，以確保密封狀態，並有助於減少或消除因震動所導致的噪音以及撞擊聲，更可防止因搖晃或震動而導致的意外開啟
- 材質:鋅合金 (ZDC)
- 表面處理:鍍鉻
- 用途:軌道交通、航空航天、巴士和客車、特殊用途車

Product description:

- Designed for quick, secure closure in applications where vibration, sealing, and quality are paramount. The compression action provides environmental sealing in gasket applications, and helps reduce or eliminate noise and rattles caused by vibration. And also resists accidental opening due to shock or vibration.
- Material: Zinc Alloy (ZDC)
- Surface treatment: Electroplated With Chrome
- Uses: Rail aeropase,bus&coach,specialty vehicle.

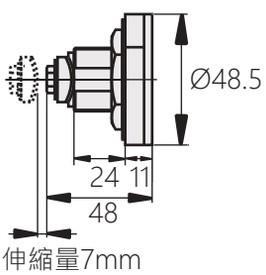

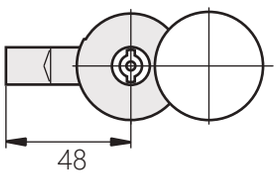

開孔尺寸

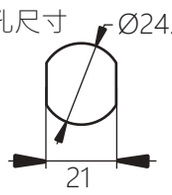

圓柱掛鎖

TM-1001

Cam lock



商品介紹:

- 可加掛鎖，旋轉90度實現開啟和關閉
- 鎖片為鋅合金鑄造，具有90度限位功能
- 帶防水圈，具有防水功能
- 材質:鋅合金(ZDC）
- 表面處理:本體噴塑藍灰、鎖片鍍鋅
- 用途:機箱機櫃、控制箱、電力箱

Product description:

- Padlock can be added, rotated 90 degrees to open and close
- Pawls is zinc alloy casting with 90 degree limit function
- With waterproof ring, waterproof function
- Material: Zinc Alloy (ZDC)
- Surface treatment: Body spray blue-gray, Pawl galvanized
- Uses: Chassis cabinet, control box, electrical box.

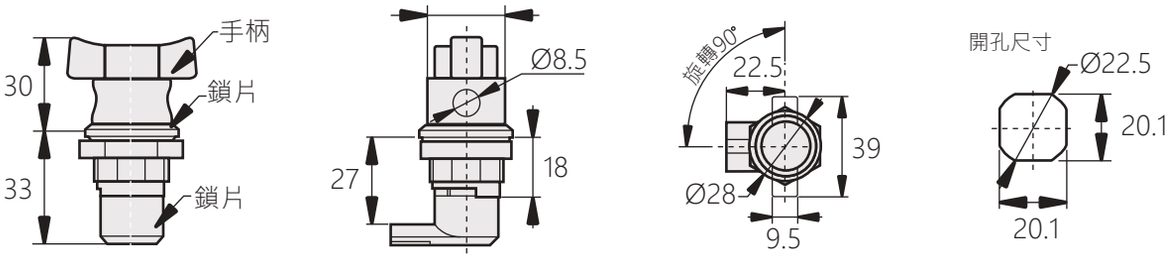

拇指鎖

TM-068

Thumb lock



商品介紹:

- 按壓旋轉開門，迫緊功能好
- 可用一字螺絲刀按壓旋轉
- 設有卡位，有效防止震動開門現象
- 材質:鋅合金(ZDC)
- 表面處理:亮光鉻
- 用途:小型機箱機櫃、控制箱側門

Product description:

- Press the rotary door to open the door
- Use a flat-blade screwdriver to press and rotate
- Card position is provided to prevent vibration from opening
- Material: Zinc Alloy (ZDC)
- Surface treatment: Bright chrome
- Uses: Small chassis cabinet, control box side door.

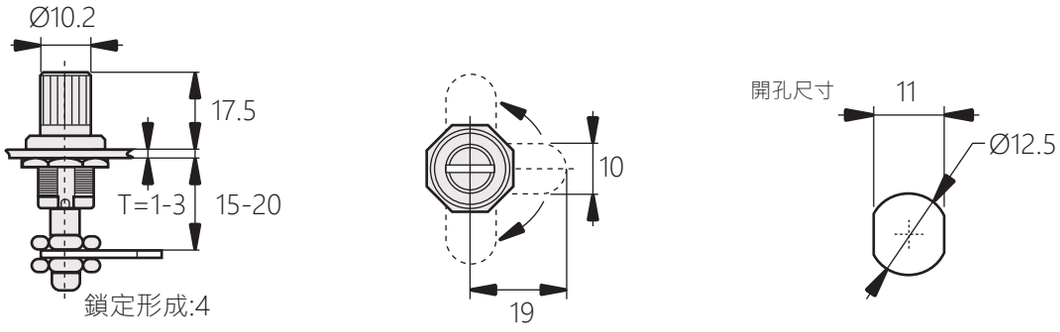

防水平面把手

Waterproof Flat Lift And Turn Latch

TM-010



〔TM-010-2〕

〔TM-010-1〕

商品介紹:

- 防水設計:內部設置O 型環，外部使用防水墊片
  左右開門通用:透過變更門擋片以及方向限位擋板的
  方向，即可實現左右開門使用
- 材質:鋅合金
- 表面處理:鍍鉻
- 用途:機櫃、配分電盤、機械設備
- 備註:配件TH-002,TH-004與TM-818-1,-2搭配

Product description:

- Waterproof: Using o-ring inside and sheet packing. for both left-hand and right-hand ,use:the left-hand and right-hand use can be changed by reversing the cam and stopper plate.
- Material: Zinc Alloy
- Surface treatment: Silver powder coated
- Uses: Communication cubicle, control panel, cabinet door,machinery equipment
- Note: Accessories TH-002, TH-004 and TM-818-1, -2

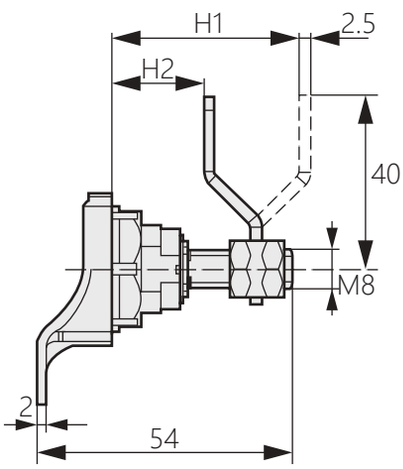

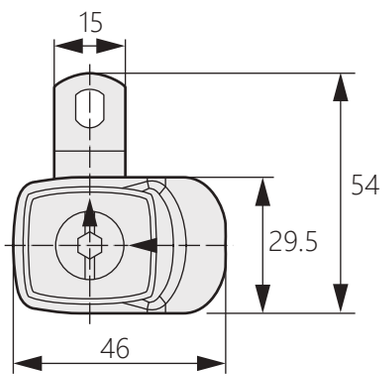

可選配件

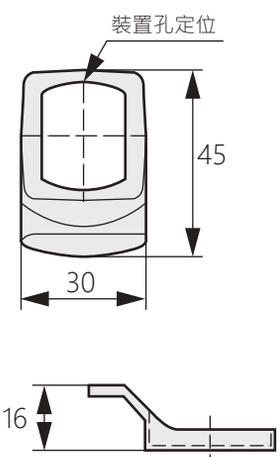

開孔尺寸

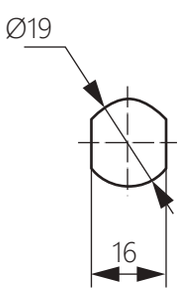

鎖片形式

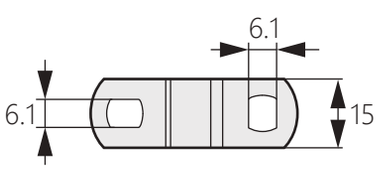

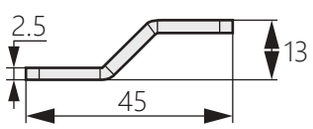

TH-22

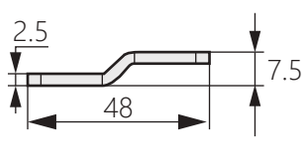

TH-21

商品型號	鎖芯	H1		H2	
		TH-21	TH-22	TH-21	TH-22
TM-010-1		28-36	33-42	17-26	12-22
TM-010-2					

不鏽鋼圓頭鎖

TM-062

Stainless steel round head lock



商品介紹:

- 具有回壓縮性能
- 密封防水性能好
- 材質:不鏽鋼304
- 表面處理:拉絲拋光
- 用途:高等電力箱、控制箱、自動化設備使用的箱體

Product description:

- With back compression performance
- Good waterproof performance
- Material: Stainless steel 304
- Surface treatment: Mirror poloshing
- Uses: Boxes used in higher power boxes, control boxes, and automation equipment.

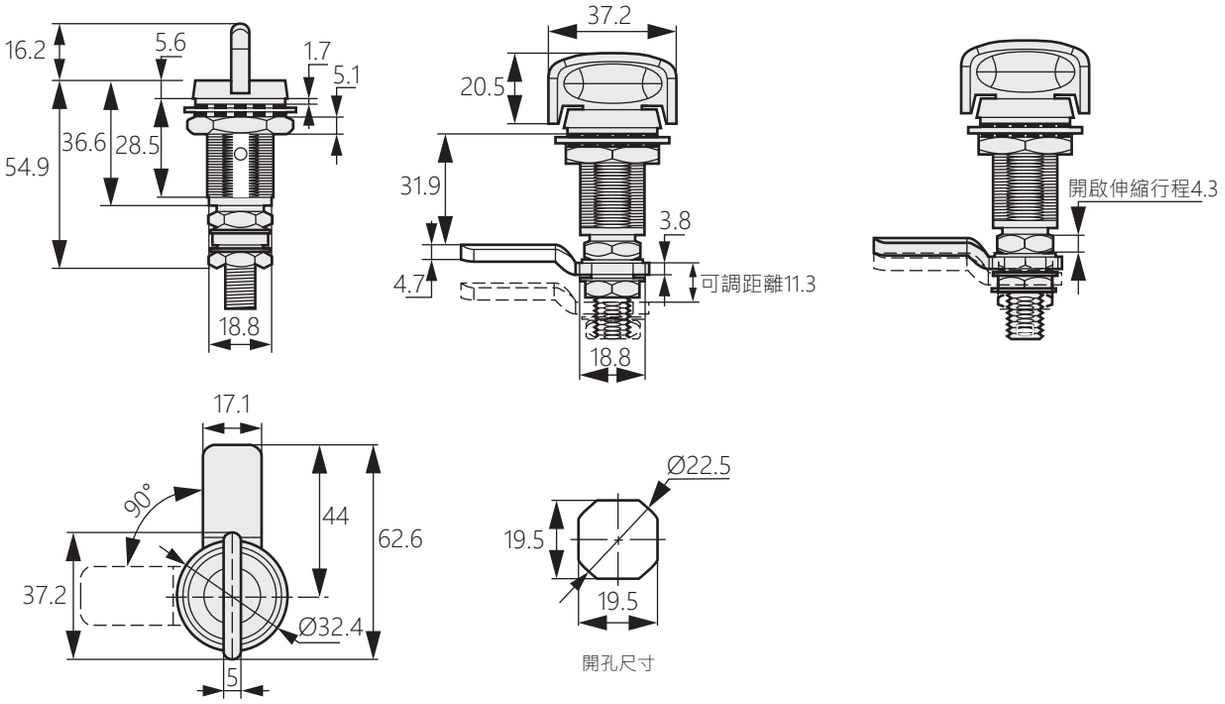

圓柱掛鎖

TM-067

Cam lock



商品介紹:

- 按壓即可開門，操作簡單
- 設計按壓力量輕巧，省力
- 材質:鋅合金(ZDC)
- 表面處理:亮光鉻
- 用途:小型機箱機櫃、控制箱側門

Product description:

- Press to open the door, easy to operate
- Design pressing force is light and labor-saving
- Material: Zinc Alloy (ZDC)
- Surface treatment: Bright chrome
- Uses: Small chassis cabinet, control box side door.

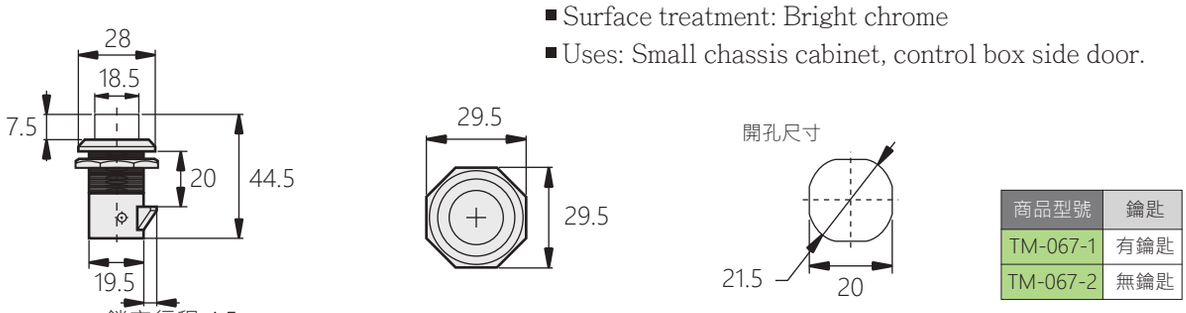

商品型號	鑰匙
TM-067-1	有鑰匙
TM-067-2	無鑰匙

特製信箱鎖

TM-064

Special letter box lock



商品介紹:

- 外觀小巧，操作簡單
- 鎖片處帶有溝槽，可牢固勾住門板
- 材質:主體為鋅合金、冷軋板
- 表面處理:本體鍍亮鉻、鎖片鍍白鋅
- 四種鎖體長度規格可供選擇
- 用途:控制箱、電力箱、機箱機櫃、信箱

Product description:

- Small size and easy operation
- The locking piece has a groove to firmly hook the door panel.
- Material: The main body is zinc alloy, cold rolled plate
- Surface treatment: Bright chrome on the body、 white zinc plated lock.
- Four lock body length specifications are available
- Uses: Control box, power box, chassis cabinet, mailbox.

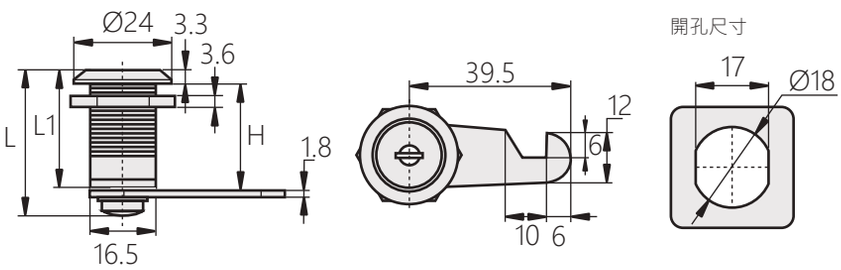

商品型號	L	L1	H
TM-064-1	26.6	15.9	17.2
TM-064-2	29.6	23.2	19.9
TM-064-3	34.39	28	24.7
TM-064-4	39.1	32.7	29.4

輕巧圓頭門鎖

TM-003

Light round head lock



[TM-003-1] [TM-003-2]

商品介紹:

- 外觀小巧、美觀
- 左右兼用型
- 材質:鋅合金、冷軋板
- 可選用通開和不通開鑰匙鎖芯
- 用途:小型機箱、機櫃、配電箱

Product description:

- Small and beautiful appearance
- Left and right
- Material: Zinc alloy, cold rolled sheet
- Optional open and non-open key lock core
- Uses: Small chassis, cabinet, distribution box.

[TM-003-1]

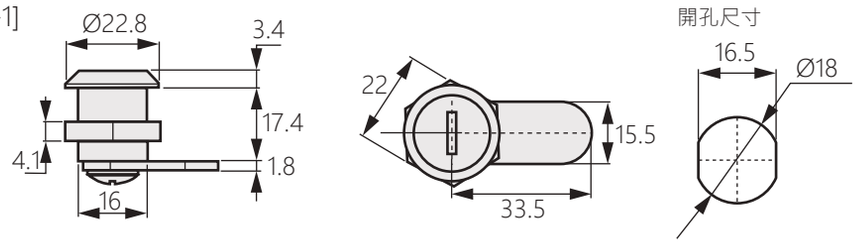

[TM-003-2]

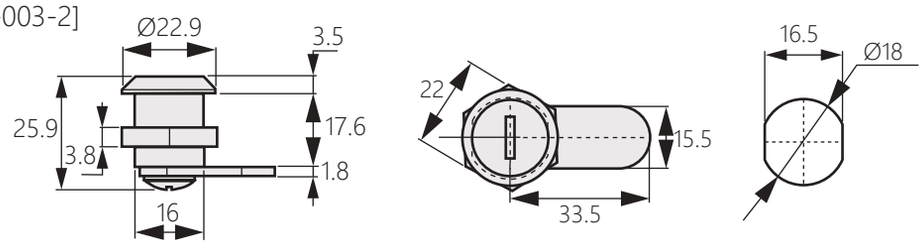

商品型號	形式
TM-003-1	不通開
TM-003-2	通開

牢固信箱鎖 TM-065

Special letter box lock



商品介紹:

- 外觀小巧，操作簡單
- 鎖片處帶有溝槽，可牢固勾住門板
- 材質:主體為鋅合金、冷軋板
- 表面處理:本體鍍亮鉻、 鎖片鍍白鋅
- 兩種鎖體規格可供選擇
- 備註:鎖體表面為橘皮紋處理
- 用途:控制箱、電力箱、機箱機櫃、信箱

Product description:

- Small size and easy operation
- The locking piece has a groove to firmly hook the door panel.
- Material: The main body is zinc alloy, cold rolled plate.
- Surface treatment: Bright chrome on the body, white zinc plated lock.
- Two lock body sizes are available
- Note: The surface of the lock body is treated with oange peel.
- Uses: Control box, power box, chassis cabinet, mailbox.

[TM-065-1]

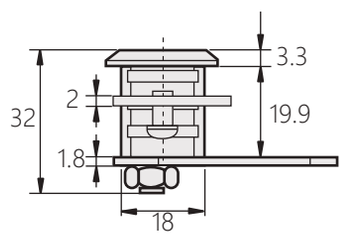

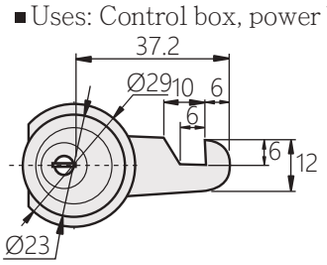

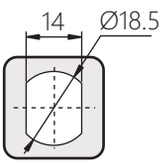

[TM-065-2]

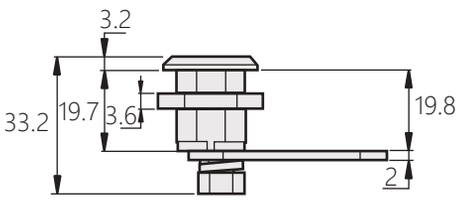

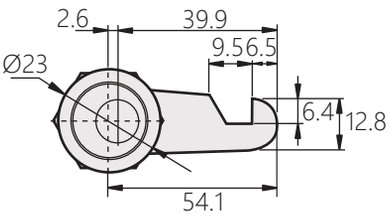

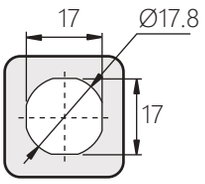

圓形拉手鎖 TM-769

Round handle lock



商品介紹:

- 把手隱藏,節省空間,低調實用
- 隱形拉環,弧形設計,全方位旋轉,開啟更方便
- 材質:不鏽鋼
- 表面處理:砂光
- 用途:各式房門,櫃門

Product description:

- Hidden handle, save space, low-key and practical
- Invisible pull ring, arc design, all-round rotation, more convenient opening.
- Material: Stainless steel 304
- Surface treatment: Sanding
- Uses: All kinds of room doors, cabinet doors

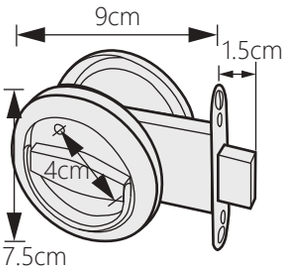

商品型號	形式
TM-769-1	雙環帶鎖
TM-769-2	單環帶鎖
TM-769-3	單環

面板鎖 TM-088

Panel lock



商品介紹:

- 鎖芯與鎖殼一體成型，防水防塵效果佳
- 彈片設計，開啟和關閉時回饋性良好
- 適用於門板厚度1.5-25mm
- 材質:鋅合金
- 表面處理:黑色烤漆
- 用途:戶外機櫃、電力設備、控制箱
- 備註:有不同止口高度鎖片可選

Product description:

- The lock core and the lock shell are integrally formed, and the waterproof and dustproof effect is good.
- Good elastic feedback
- Shrapnel design, good feedback when opening and closing.
- Material: Zinc alloy
- Surface treatment: Black paint
- Uses: Outdoor cabinets, power equipment, control boxes.
- Note: There are different locking heights to choose from.

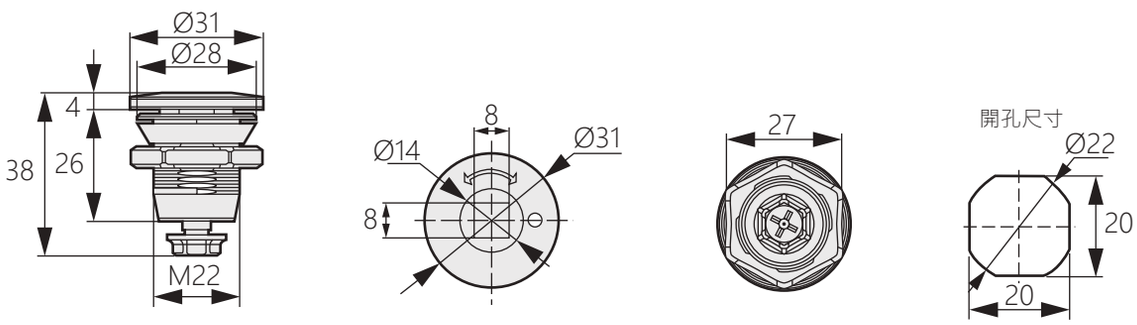

防水型圓鎖 TM-8172

Waterproof Cam Lock



商品介紹:

- 防水設計:內部設置 O 型環，外部使用防水墊片，結構緊湊，重量輕
- 材質:鋅合金
- 表面處理:黑色塗裝
- 用途:小型門板、檢查口

Product description:

- Waterproof: Using O-ring inside and sheet packing Compact and light weight.
- Material: Zinc Alloy (ZDC)
- Surface treatment: Black Powder Coated
- Uses: Inspection entrance and small doors.

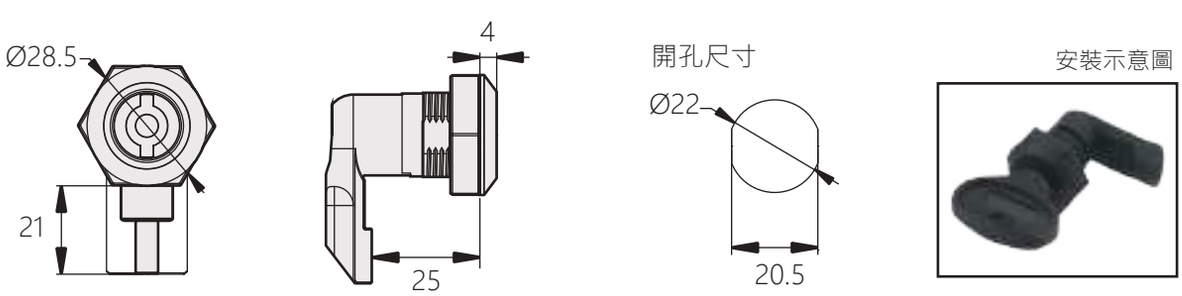

圓型拉環式門鎖 TM-365

Round pull-type door lock



商品介紹:

- 關門時只需推回即可
- 材質:尼龍
- 適用板厚1~12mm

Product description:

- Just push back when you close the door.
- Material: Nylon
- Applicable plate thickness 1~12mm

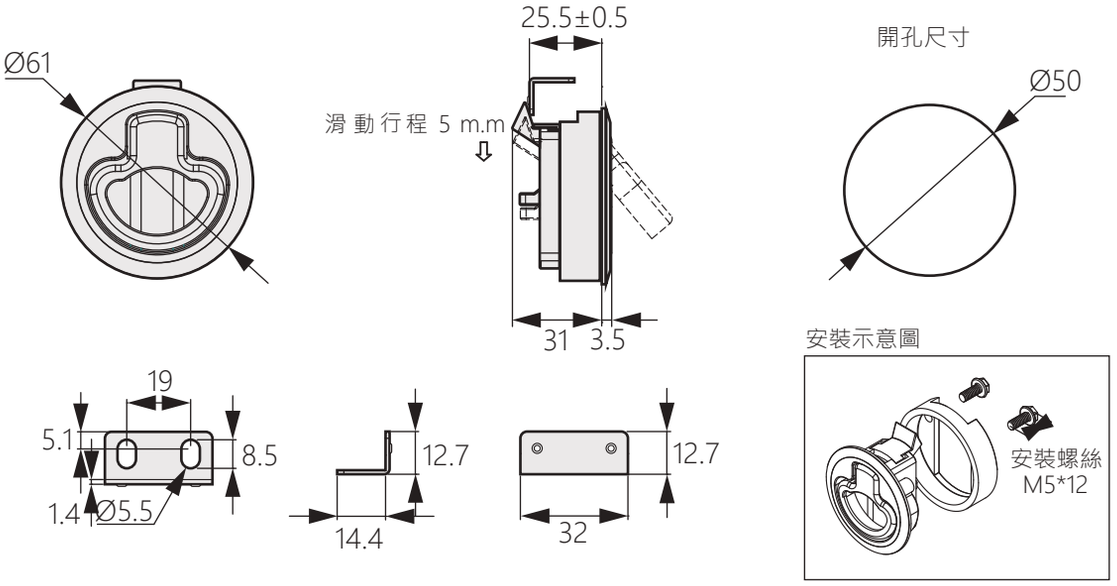

圓型拉環式門鎖 TM-36

Round pull-type door lock



商品介紹:

- 左右兼用型，拉起把手即開啟
- 材質:尼龍
- 表面處理:黑色、白色
- 用途:自動化設備、醫療設備、船舶

Product description:

- Left and right type, pull up the handle to open
- Material: Nylon
- Surface treatment: Black, white
- Uses: Automation equipment, medical equipment, ships

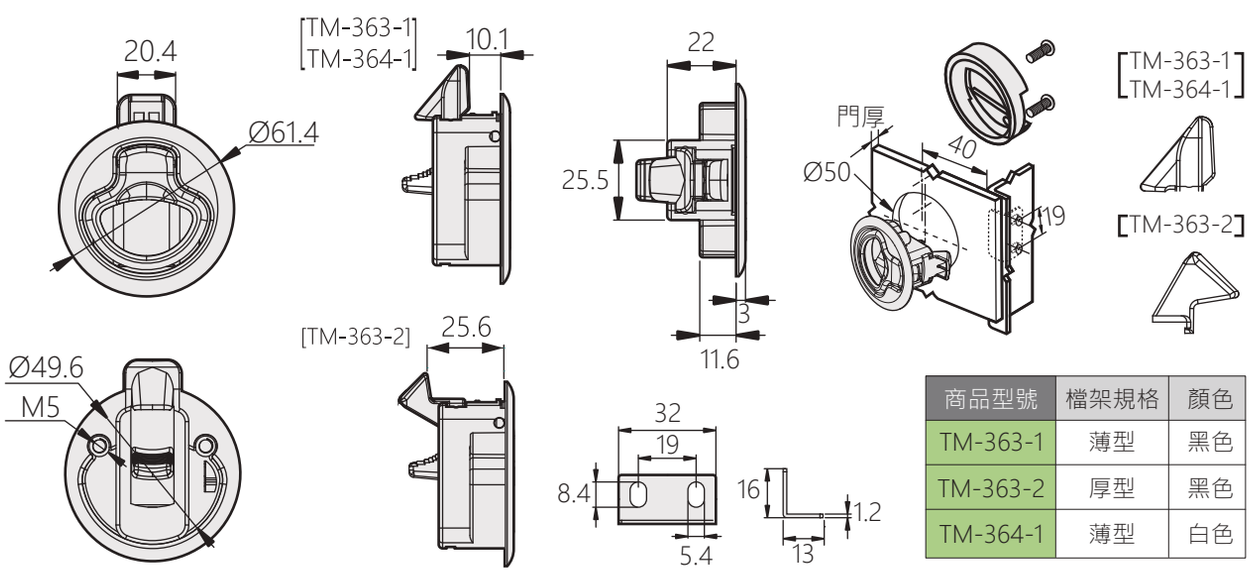

商品型號	檔架規格	顏色
TM-363-1	薄型	黑色
TM-363-2	厚型	黑色
TM-364-1	薄型	白色

圓型拉環式門鎖 TM-307

Round pull-type door lock



商品介紹:

- 左右兼用型，拉起把手即開啟
- 材質:不鏽鋼
- 表面處理:鏡面拋光
- 用途:自動化設備、醫療設備、船舶

Product description:

- Left and right type, pull up the handle to open
- Material: Stainless steel
- Surface treatment: Mirror polished
- Uses: Automation equipment, medical equipment, ships.

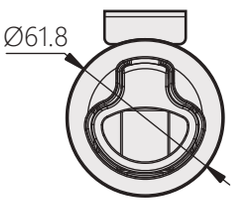

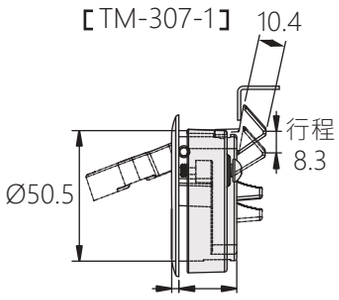

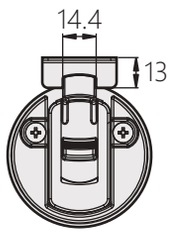

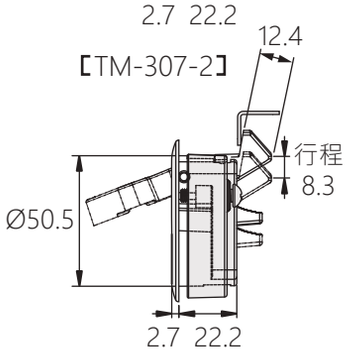

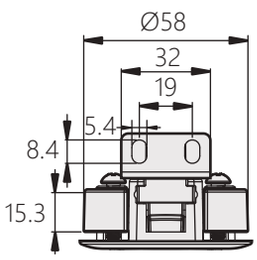

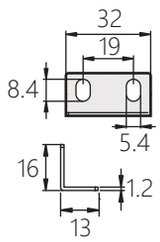



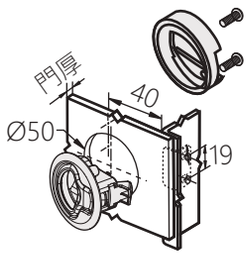

商品型號	檔架規格
TM-307-1	薄型
TM-307-2	厚型

圓型拉環式門鎖 TM-308

Round pull-type door lock

商品介紹:

- 耐火、耐熱、耐鹽、耐酸鹼
- 材質:不鏽鋼鑄件(SUS316)
- 表面處理:鏡面拋光
- 用途:船舶、環境設備、無塵室、醫療儀器

Product description:

- Fire-resistant, heat-resistant, saltwater-resistant and acid-resistant.
- Material: Cast stainless steel (SUS316)
- Surface treatment: Mirror surface buffing
- Uses: Aerospace, Automotive Passenger Vehicles, Trucks, Electronic Enclosures, Exhibits/signs, Marine, Medical.



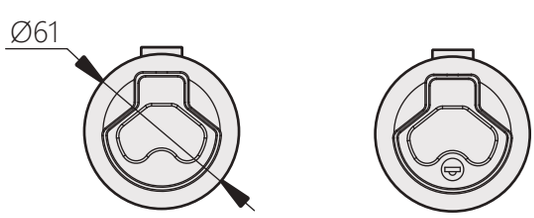

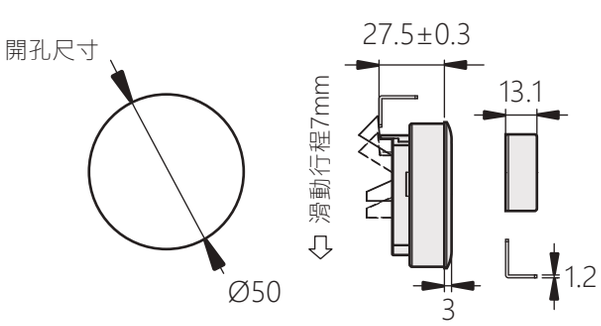

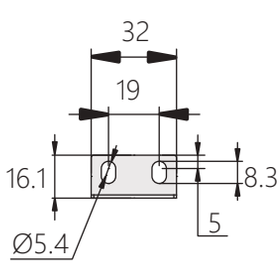

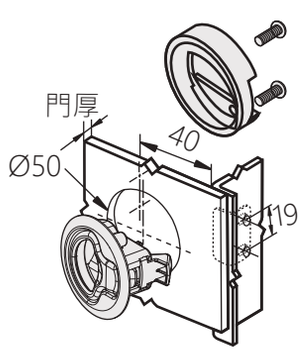

商品型號	規格
TM-308-1	有鎖
TM-308-2	無鎖

不鏽鋼防水型圓鎖

TM-706

Stainless Steel Cam Lock



商品介紹:

- ■材質:不鏽鋼 SUS304
- ■表面處理:拋光
- ■檔片選擇: TH-4500-S
  TH-4507-S
  TH-4516-S
- ■用途:戶外型配電箱、配分電盤、環境設備、食品設備
- ■備註:附鑰匙

Product description:

- ■Material: Stainless steel (SUS304)
- ■Surface treatment: Polishing
- ■Cam selection: TH-4500-S
  TH-4507-S
  TH-4516-S
- ■Uses: Outdoor power/distribution boards and control boards ; outdoor Equipment
- ■Note: With key

開孔尺寸

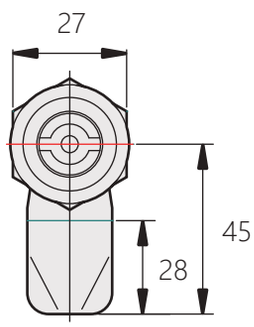

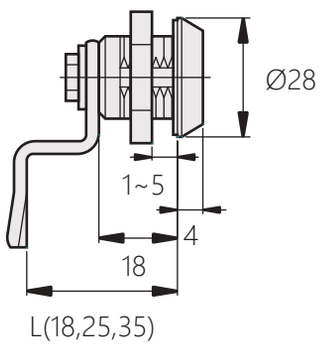

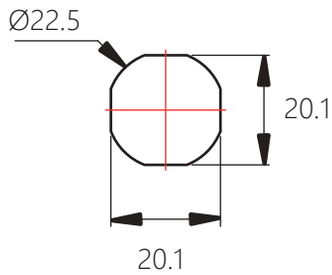

商品型號	鎖芯規格
TM-706-1	翼型
TM-706-2	三角形
TM-706-3	內六角
TM-706-4	一字型

[TH-4500-S]
[TH-4500]

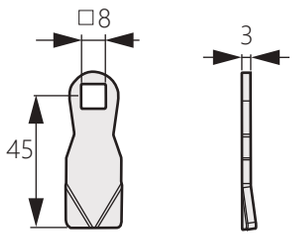

商品型號	材質
TH-4500-S	不鏽鋼

[TH-4507-S]
[TH-4507]

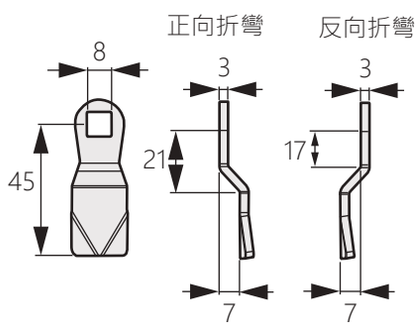

商品型號	材質
TH-4507-S	不鏽鋼

[TH-4516-S]
[TH-4516]

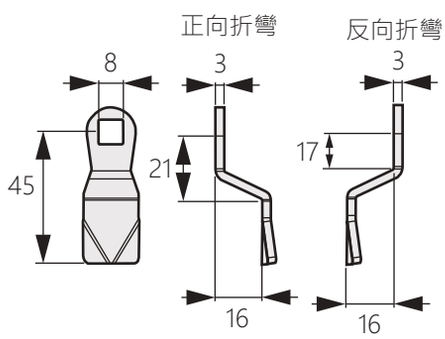

商品型號	材質
TH-4516-S	不鏽鋼

防水型圓鎖

Quarter Turn Waterproof Lock

TM-705

CAD



商品介紹:

- ■材質:鋅合金
- ■表面處理:黑色塗裝、鍍鉻
- ■檔片選擇: TH-4500-S, TH-4500
  TH-4507-S, TH-4507
  TH-4516-S, TH-4516
- ■內部設置O型環，外部使用防水墊片的防水設計
- ■用途:戶外型配電箱、配分電盤、環境設備、食品設備

Product description:

- ■Material: Stainless steel (SUS304)
- ■Surface treatment: Polishing
- ■Cam selection: TH-4500-S, TH-4500
  TH-4507-S, TH-4507
  TH-4516-S, TH-4516
- ■Waterproof Using O-ring inside and shet packing.
- ■Uses: Outdoor power/distribution boards and control boards ; Outdoor Equipment

開孔尺寸

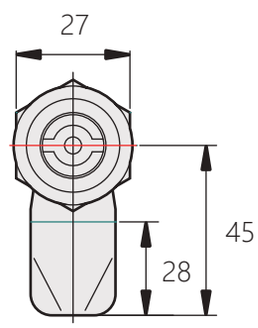

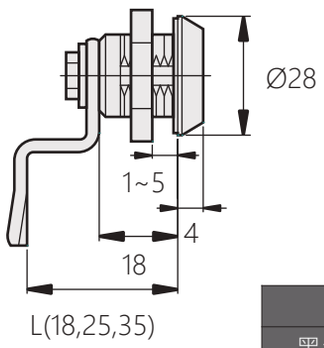

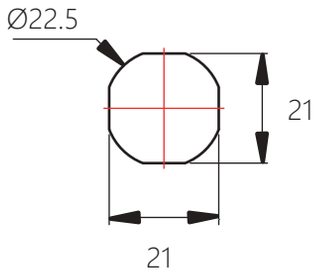

商品型號		鎖芯
黑色塗裝	亮鉻	
TM-705-1-1	TM-705-1-2	S型鎖芯
TM-705-2-1	TM-705-2-2	三角形鎖芯
TM-705-3-1	TM-705-3-2	四角形鎖芯
TM-705-4-1	TM-705-4-2	內六角形鎖芯
TM-705-5-1	TM-705-5-2	一字型鎖芯

[TH-4500-S]
[TH-4500]

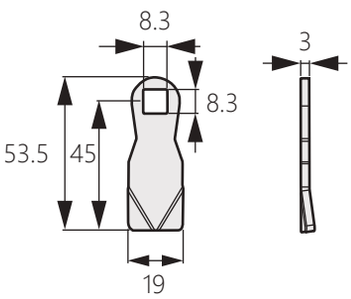

商品型號	材質
TH-4500	鐵
TH-4500-S	不鏽鋼

[TH-4507-S]
[TH-4507]

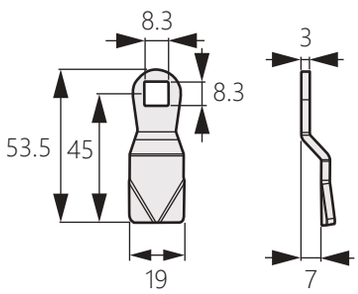

商品型號	材質
TH-4507	鐵
TH-4507-S	不鏽鋼

[TH-4516-S]
[TH-4516]

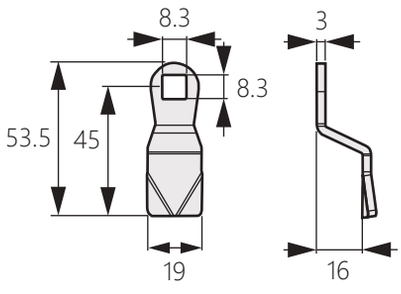

商品型號	材質
TH-4516	鐵
TH-4516-S	不鏽鋼

防水迫緊門扣

Rotation Type Compression Latch

TM-814



商品介紹:

- 適用於防震動、密封、高品質的組件，能快速安全關閉門板。迫緊動作可將門板及門框拉緊，以確保密封狀態，並有助於減少或消除因震動所導致的噪音以及撞擊聲，更可防止因撞晃或震動而導致的意外開啟
- 材質:主體 - 鋅合金、擋片 - 鐵
- 表面處理:主體 - 黑色塗裝、擋片 - 鍍鋅
- 適用板厚:1~18 mm
- 門擋片迫緊行程: 7mm

Product description:

- Designed for quick, secure closure in applications where vibration, sealing, and quality are paramount. The compression action provides environmental sealing in gasket applications, and helps reduce or eliminate noise and rattles caused by vibration. And also resists accidental opening due to shock or vibration.
- Material: Main Body-Zinc Alloy ; Cam-Steel
- Surface treatment: Main Body-Black Powder Coated ; Cam-Zinc Plated.
- Panel thickness: 1~18 mm
- Compression Distance: 7 mm

商品型號	
有鎖	無鎖
TM-814-1	TM-814-2

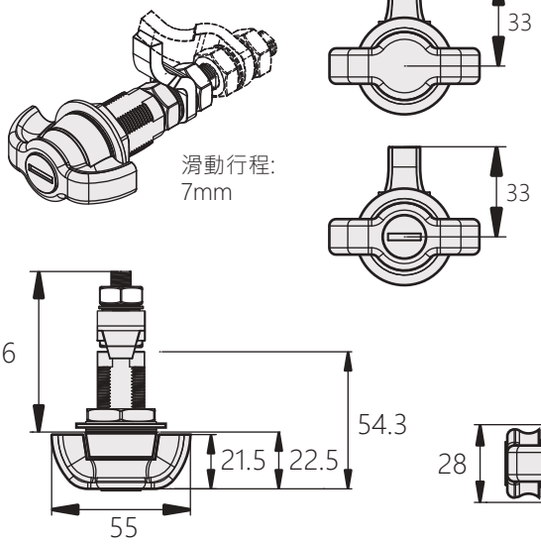

防塵機罩鎖

Dust hood lock

TM-815



商品介紹:

- 適用於防震動、密封、高品質的組件，能快速安全關閉門板。 迫緊動作可將門板及門框拉緊，以確保密封狀態，並有助於減少或消除因震動所導致的噪音以及撞擊聲，更可防止因撞晃或震動而導致的意外開啟
- 材質:鋅合金(ZDC)
- 表面處理:藍灰色塗裝
- 用途:軌道交通、航空航天、巴士和客車、特殊用途車

Product description:

- Designed for quick, secure closure in applications where vibration, sealing, and quality are paramount. The compression action provides environmental sealing in gasket applications, and helps reduce or eliminate noise and rattles caused by vibration. And also resists accidental opening due to shock or vibration.
- Material: Zinc Alloy (ZDC)
- Surface treatment: Blue Gray Powder Coated
- Uses: Rail aeropase,bus&coach,specialty vehicle.

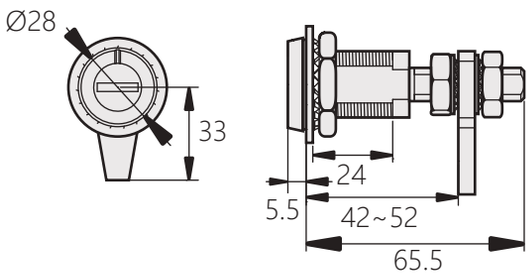

防水型圓鎖

TM-845

Quarter Turn Waterproof Lock-Mini Type



商品介紹:

- ■防水設計:內部設置 O 型環，外部使用防水墊片，結構緊湊，重量輕
- ■材質:鋅合金
- ■表面處理:黑色塗裝
- ■用途:小型門板、檢查口

Product description:

- ■Waterproof: Using O-ring inside and sheet packing, Compact and light weight.
- ■Material: Zinc Alloy (ZDC)
- ■Surface treatment: Black Powder Coated
- ■Uses: Inspection entrance and small doors.

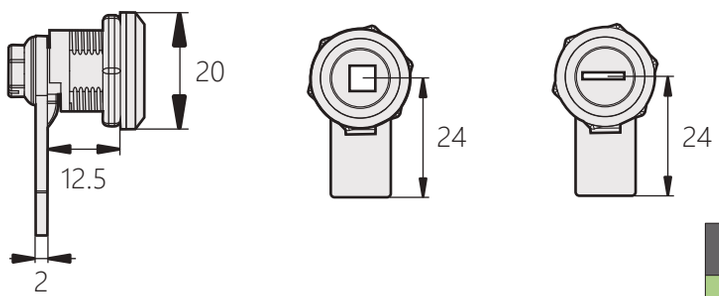

商品型號	鎖芯規格
TM-845-1	四角形
TM-845-2	一字型

不鏽鋼自動化設備迫緊鎖

TM-063D-1

Stainless steel automation equipment urgently locked



商品介紹:

- ■密封性能良好
- ■材質:不鏽鋼304
- ■表面處理:拉絲拋光
- ■用途:高等電力箱、控制箱、自動化設備使用的箱體

Product description:

- ■Material: Stainless steel 304
- ■Surface treatment : Brushed and polished
- ■Good sealing performance
- ■Uses: Boxes used in higher power boxes, control boxes, and automation equipment.

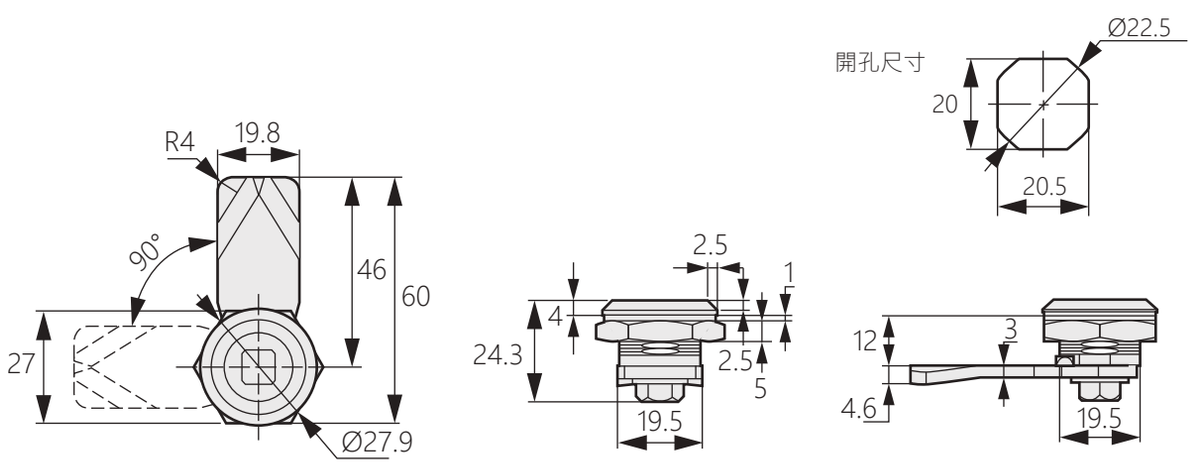

不鏽鋼迫緊圓頭鎖

TM-063D-2

Stainless steel tight round head lock



商品介紹:
- ■密封性能良好
- ■材質:不鏽鋼SUS304
- ■表面處理:拉絲拋光
- ■用途:高等電力箱、控制箱、自動化設備使用的箱體

Product description:
- ■Material: Stainless steel (SUS304)
- ■Surface treatment: Brushed and polished
- ■Good sealing performance
- ■Uses: Boxes used in higher power boxes, control boxes, and automation equipment.

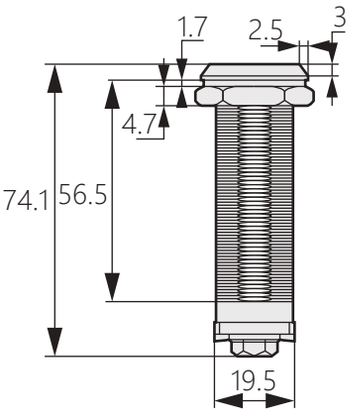

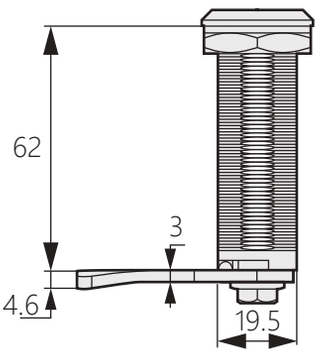

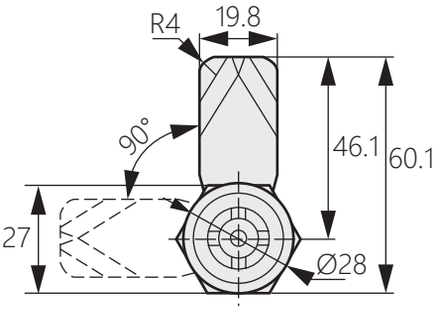

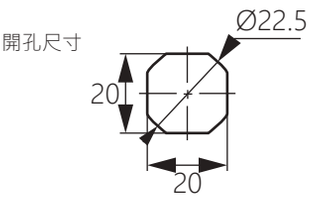

不鏽鋼戶外防水迴轉鎖

TM-063D-3

Stainless Steel Outdoor Waterproof Swing Lock



商品介紹:
- ■密封性能良好
- ■材質:不鏽鋼304
- ■表面處理:拉絲拋光
- ■用途:高等電力箱、控制箱、自動化設備使用的箱體

Product description:
- ■Good sealing performance
- ■Material: Stainless steel 304
- ■Surface treatment : Brushed and polished
- ■Uses: Boxes used in higher power boxes, control boxes, and automation equipment.

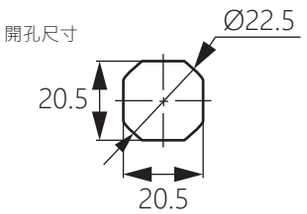

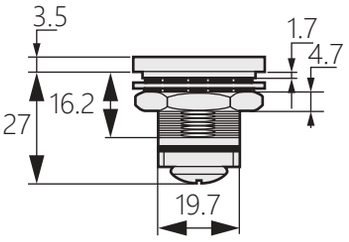

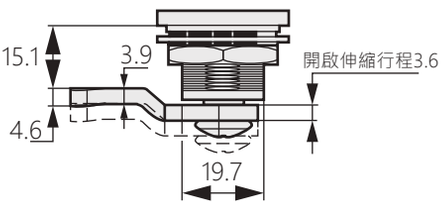

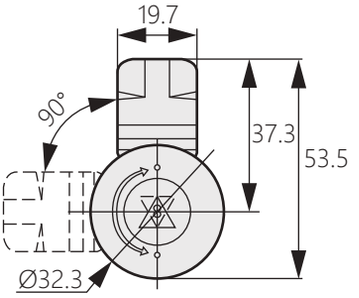

不鏽鋼迫緊圓頭鎖

TM-063D-4

Stainless steel tight round head lock



商品介紹:
- ■密封性能良好
- ■材質:不鏽鋼SUS304
- ■表面處理:拉絲拋光
- ■用途:高等電力箱、控制箱、自動化設備使用的箱體

Product description:
- ■Good sealing performance
- ■Material: Stainless steel (SUS304)
- ■Surface treatment: Brushed and Polished
- ■Uses: Boxes used in higher power boxes, control boxes, and automation equipment.

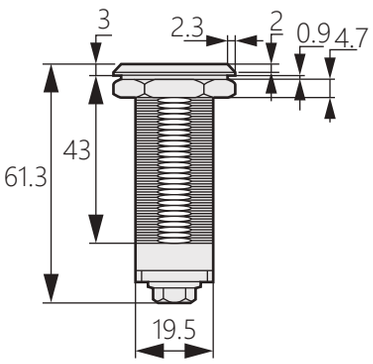

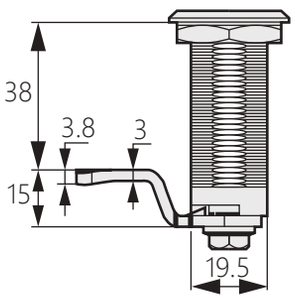

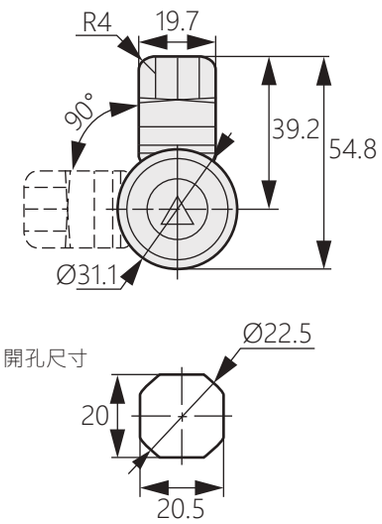

戶外防水迴轉鎖

TM-063D-6

Outdoor Waterproof Swing Lock



商品介紹:
- ■具有回壓縮性能
- ■密封性能良好
- ■材質:不鏽鋼304
- ■表面處理:拉絲拋光
- ■用途:高等電力箱、控制箱、自動化設備使用的箱體

Product description:
- ■With back compression performance
- ■Good sealing performance
- ■Material: Stainless steel 304
- ■Surface treatment: Brushed and Polished
- ■Uses: Boxes used in higher power boxes, control boxes, and automation equipment.

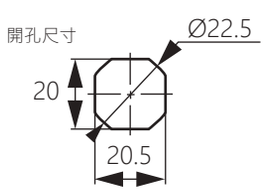

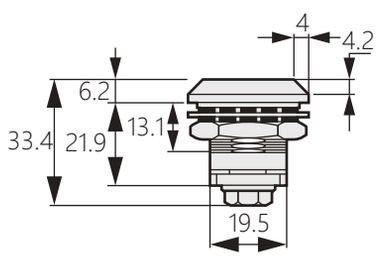

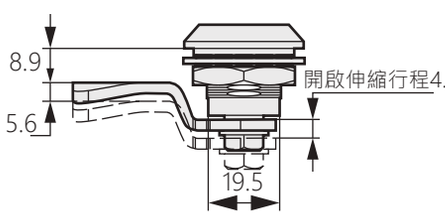

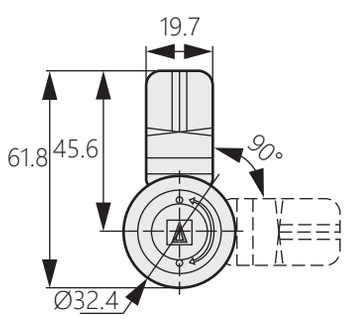

不鏽鋼迫緊圓頭鎖

TM-063D-5

Stainless steel tight round head lock



商品介紹:

- 密封性能良好
- 材質:不鏽鋼SUS304
- 表面處理:拉絲拋光
- 用途:高等電力箱、控制箱、自動化設備使用的箱體

Product description:

- Good sealing performance
- Material: Stainless steel (SUS304)
- Surface treatment: Brushed and Polished
- Uses: Boxes used in higher power boxes, control boxes and automation equipment.

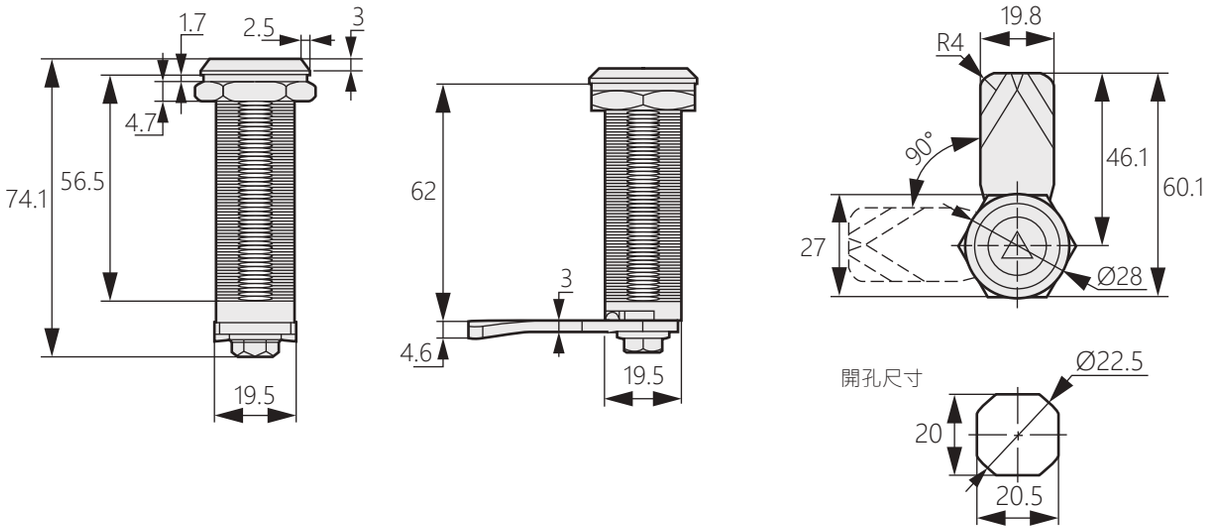

不鏽鋼T型把手鎖

TM-305

Stainless steel T-shaped handle lock



商品介紹:

- 最大開啟角度90度
- 材質:不鏽鋼304
- 表面處理:拉絲拋光
- 用途:控制箱、電力箱、自動化設備等

Product description:

- Maximum opening angle of 90 degrees.
- Material: Stainless steel 304
- Surface treatment : Brushed and Polished
- Uses: Control box, power box, automation equipment, etc.

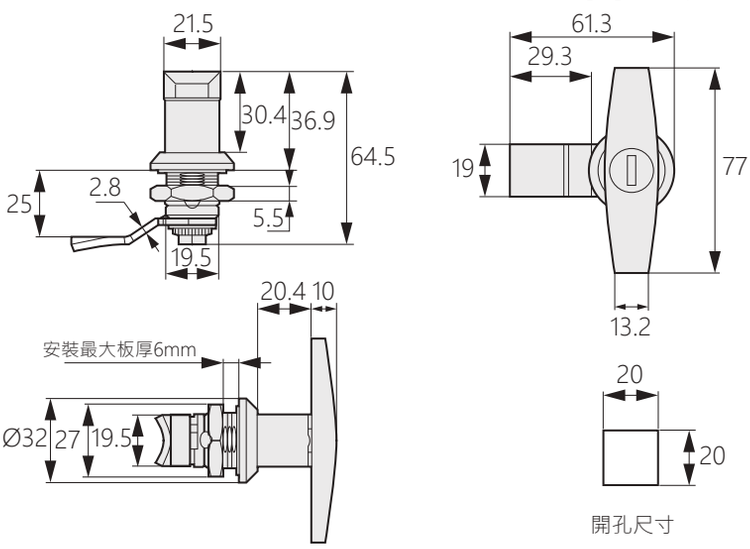

商品型號	樣式
TM-305-1	有鎖
TM-305-2	無鎖

圓頭鎖

TM-0815

Cam lock



【TM-0815-1】



【TM-0815-2】

商品介紹:

- 左右兼用型
- 鎖芯可在開啟和關閉的兩種狀態下鎖定
- 方便旋轉操作的橫向突出結構設計
- 材質:鋅合金(ZDC)
- 表面處理:黑色烤漆
- 用途:控制箱、電力箱、網絡機櫃
- 備註:實際門的止口高度選擇型號，適合的門板厚度範圍大

Product description:

- Left and right
- The lock cylinder can be locked in both open and closed states.
- Horizontal protruding structure design for convenient rotation operation.
- Material: Zinc Alloy (ZDC)
- Surface treatment: Black paint
- Uses: Control box, power box, network cabinet.
- Note: The actual door height is selected as the model, and the suitable door panel thickness range is large.

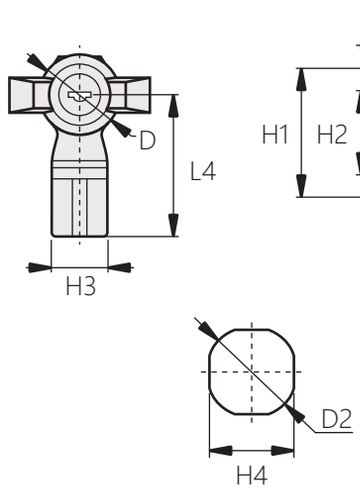

開孔尺寸

商品型號	L1	L2	L3	L4	H1	H2	H3	H4	D1	D2	T
TM-0815-1	50	28	19	50	50	32	20	20	30	22	3
TM-0815-2	40	25	11	29	34	28	16	16.5	25	18	2

按壓鎖

TM-520

Press lock



商品介紹:

- 插銷型
- 材質: 銅
- 表面處理: 電鍍亮鉻
- 鑰匙可當拉手柄使用
- 手指按壓->上鎖

Product description:

- Pin type
- Material: Copper
- Surface treatment: Electroplated bright chrome
- Finger press-> Lock

後方插梢示意圖



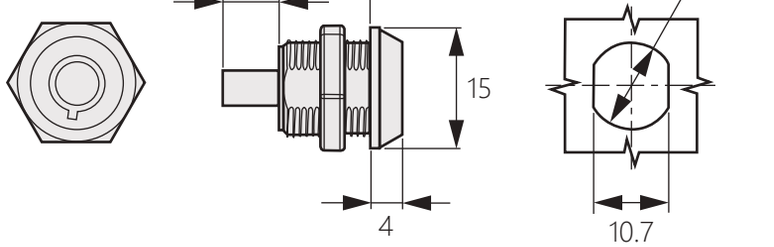

圓管鎖

Cam Lock

TM-824



商品介紹:

- ■關閉狀態時，鑰匙才可抽出，避免使用者忘記關門
- ■材質:鋅合金
- ■表面處理:鍍鉻
- ■用途:信箱、小型門板、檢查口
- ■備註:可提供雜號鎖芯組合 (訂製生產)，常規品為同號鎖芯，有三種深度可供選擇

Product description:

- ■When door close, the key can be taken out, prevent the user forget to close the door.
- ■Material: Zinc Alloy
- ■Surface treatment: Electroplated with chrome
- ■Uses: Mail box,inspection entrance and small doors
- ■Note: Can customize dfferent Key no, standard products are same key no.three length are available.

[TM-824-1]

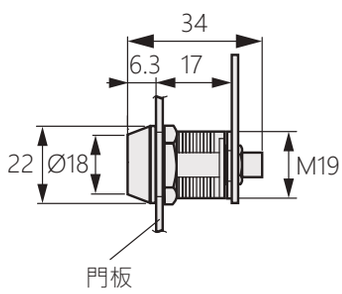

[TM-824-2]

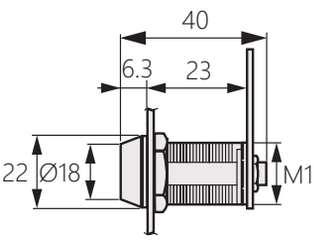

[TM-824-3]

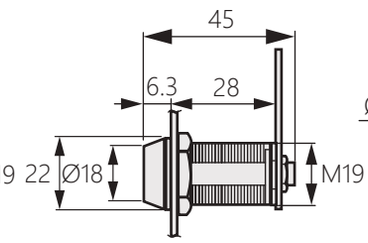

開孔尺寸

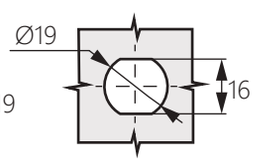

[TH-0101]

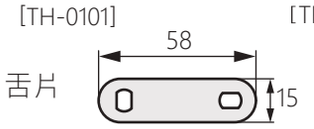

[TH-0102]

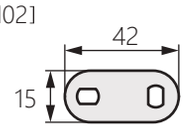

十字鎖芯圓頭鎖

Cross lock cylinder head lock

TM-014



商品介紹:

- ■鎖芯帶防塵蓋
- ■配有密封防水膠墊
- ■十字鎖芯
- ■材質:鋅合金
- ■表面處理:鍍亮鉻
- ■用途:機櫃、自動售貨機、娛樂設備

Product description:

- ■Cylinder with dust cover
- ■With sealed waterproof pad
- ■Cross lock cylinder
- ■Material: Zinc alloy
- ■Surface treatment: Bright chrome plating
- ■Uses: Cabinets, vending machines, entertainment equipment.

[TM-014-1]

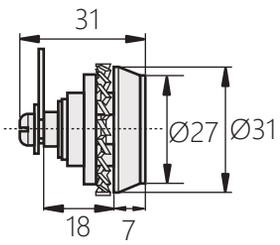

開孔尺寸

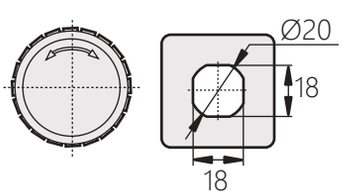

[TM-014-2]

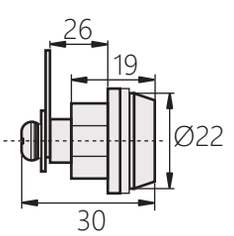

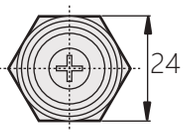

開孔尺寸

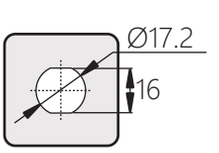

不鏽鋼圓頭鎖

TM-1064

Stainless steel round head lock



商品介紹:

- ■具有回壓縮性能
- ■密封防水性能好
- ■材質:不鏽鋼SUS304
- ■表面處理:拉絲拋光
- ■用途:高等電力箱、控制箱、自動化設備

Product description:

- ■With back compression performance
- ■Good waterproof performance
- ■Material: Stainless steel (SUS304)
- ■Surface treatment: Brushed and polished
- ■Uses: Advanced power box, control box, automation equipment.

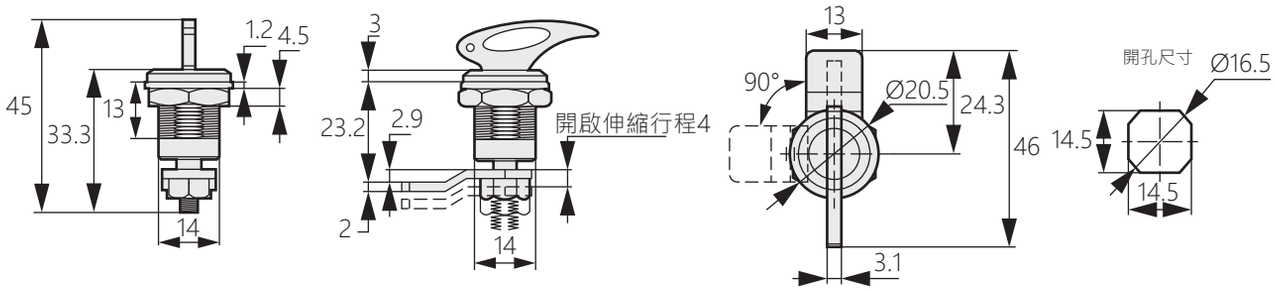

圓柱鎖

TM-709

Cylindrical lock



商品介紹:

- ■ 左右開門,鑰匙型
- ■ 最大靜載荷:150N
- ■ 材質:鋅合金基座&鎖芯、鐵擋片
- ■ 表面處理:鍍鉻基座&鎖芯、鍍鋅擋片

Product description:

- ■ Open the door left and right,Key type
- ■ Maximum static load: 150N
- ■ Material: Zinc alloy base & lock core, iron block
- ■ Surface treatment: Chrome base & lock cylinder, galvanized blank.

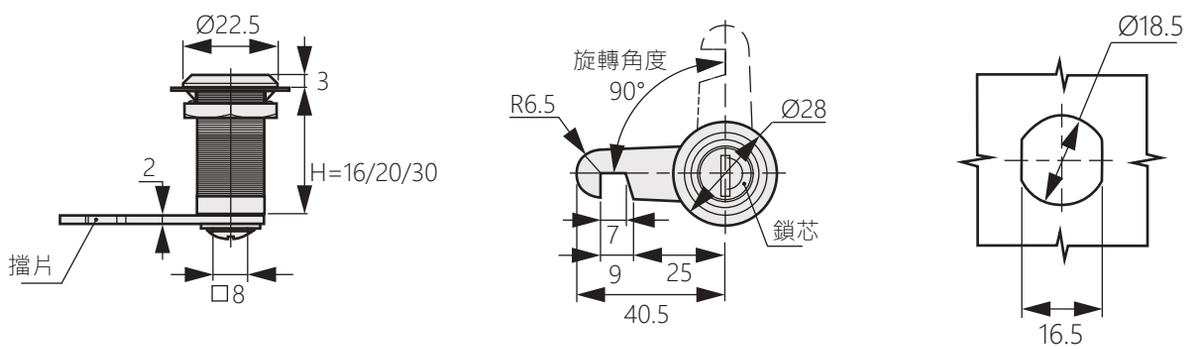

迷你型圓管鎖

TM-5201

Cam Lock-Mini Type



商品介紹:

- 關閉狀態時，鑰匙才可抽出，避免使用者忘記關門
  可提供雜號鎖芯組合 (訂製生產)，常規品為同號鎖芯
- 材質:鋅合金
- 表面處理:鍍鉻
- 用途:小型門板、檢查口

Product description:

- When door close, the key can be taken out, prevent the user forget to close the door.
  Can customize dfferent Key No, Standard products are same Key No.
- Material: Zinc Alloy (ZDC)
- Surface treatment: Electroplated With Chrome
- Uses: Inspection entrance and small doors.

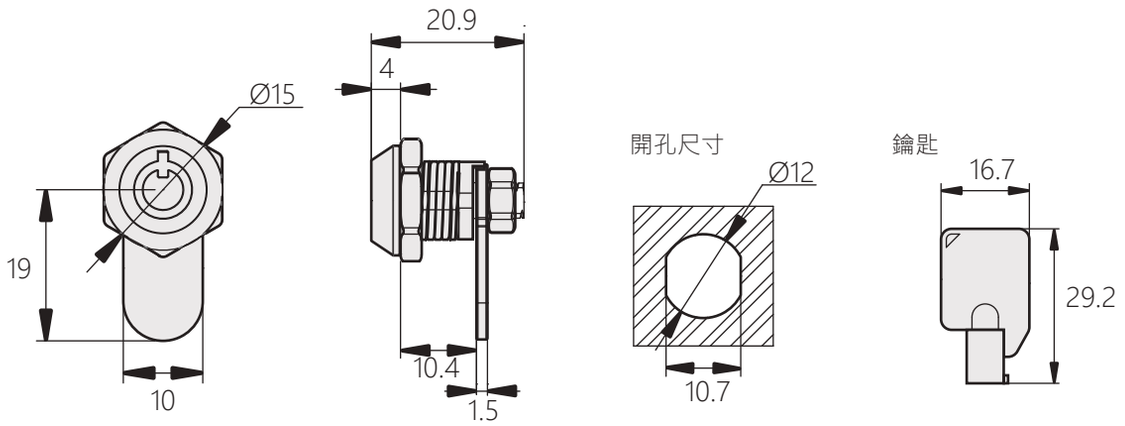

蝴蝶鎖

TM-657

Wing Knob Lockable Cam Latch



商品介紹:

- 結構緊湊，重量輕
- 材質:鋅合金
- 表面處理:鍍鉻
- 用途:小型門板、檢查口

Product description:

- Compact and light weight
- Material: Zinc Alloy (ZDC)
- Surface treatment: Electroplated With Chrome
- Uses: Inspection entrance and small doors.

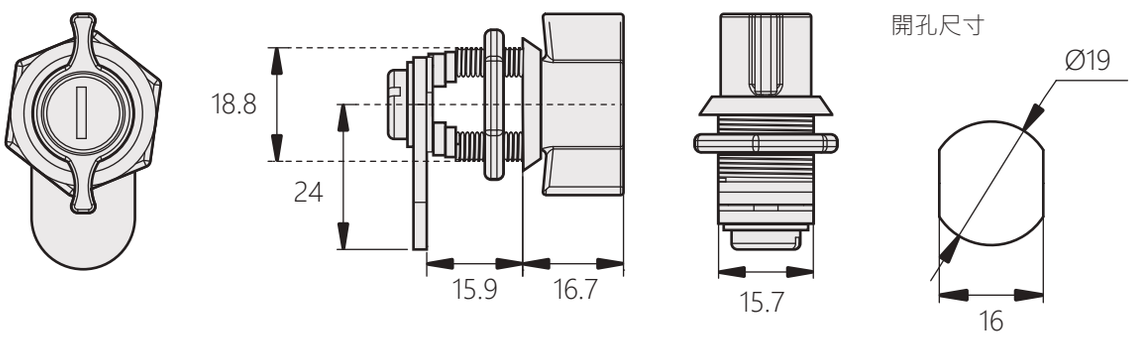

防水型圓鎖

Quarter Turn Waterproof Lock

TM-7053

ZDC 鋅 CAD



商品介紹:

- ■防水設計:內部設置 O 型環，外部使用防水墊片
  變換擋片與調整墊片可改變”L”尺寸（門擋片深度）
- ■材質:鋅合金
- ■表面處理:黑色塗裝
- ■檔片選擇: TH-4500-S, TH-4500
  TH-4507-S, TH-4507
  TH-4516-S, TH-4516
- ■用途:機櫃、配分電盤、機械設備

Product description:

- ■Waterproof: Using O-ring inside and sheet packing. Exchange the cam and steel waher position can change “L” length.
- ■Material: Zinc Alloy (ZDC)
- ■Surface treatment: Black Powder Coated
- ■Cam selection: TH-4500-S, TH-4500
  TH-4507-S, TH-4507
  TH-4516-S, TH-4516
- ■Uses: Server Rack, Communication equipment, Control Panel, Cabinet Door, Machinery Equipment.

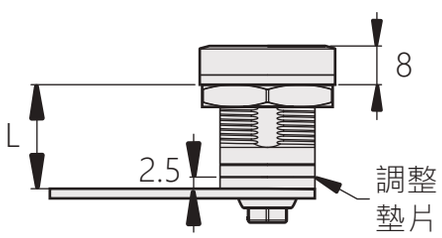

開孔尺寸

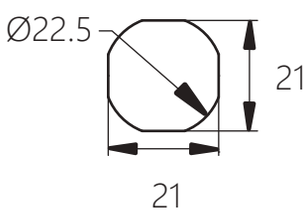

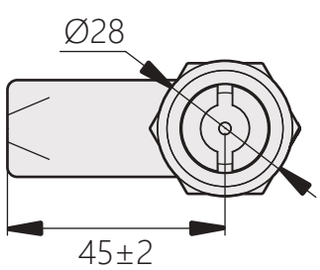

檔片型號	可調節深度” L”		
TH-4500	16	18.5	21
TH-4507	23	25.5	28
TH-4516	32	34.5	37

[TH-4500-S] [TH-4500]

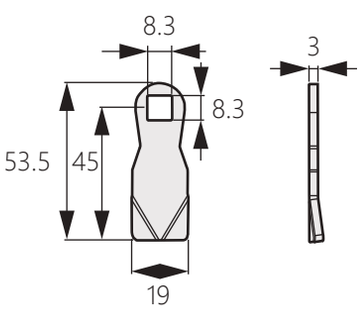

[TH-4507-S] [TH-4507]

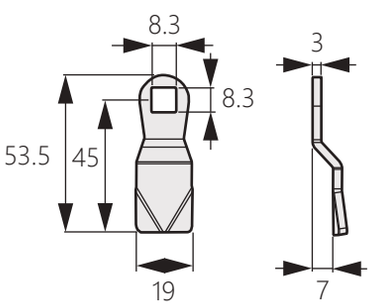

[TH-4516-S] [TH-4516]

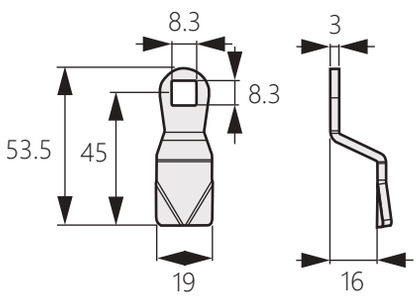

商品型號	材質
TH-4500	鐵
TH-4500-S	不鏽鋼

商品型號	材質
TH-4507	鐵
TH-4507-S	不鏽鋼

商品型號	材質
TH-4516	鐵
TH-4516-S	不鏽鋼

防水型圓鎖

TM-7141

Quarter Turn Waterproof Lock



商品介紹:

- 防水設計:內部設置 O 型環，外部使用防水墊片
- 材質:基座 - 鋅合金、手柄 - 尼龍玻璃纖維
- 表面處理:黑色塗裝
- 用途:機櫃、配分電盤、機械設備

Product description:

- Waterproof: Using O-ring inside and sheet packing
- Material: Housing-Zinc Alloy (ZDC)、Handle-PA
- Surface treatment: Black Powder Coated
- Uses: Server Rack, Communication equipment, Control Panel, Cabinet Door, Machinery Equipment.

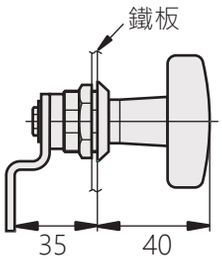

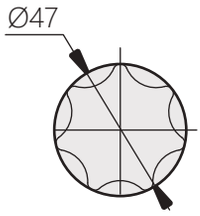

開孔尺寸

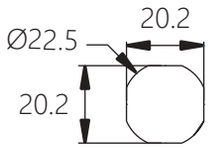

防水型圓鎖

TM-7142

Quarter Turn Waterproof Lock



商品介紹:

- 防水設計:內部設置 O 型環，外部使用防水墊片
- 材質:基座 - 鋅合金、手柄 - 尼龍玻璃纖維
- 表面處理:黑色塗裝
- 用途:機櫃、配分電盤、機械設備

Product description:

- Waterproof: Using O-ring inside and sheet packing
- Material: Housing-Zinc Alloy (ZDC)、Handle-PA
- Surface treatment: Black Powder Coated
- Uses: Server Rack, Communication equipment, Control Panel, Cabinet Door, Machinery Equipment.

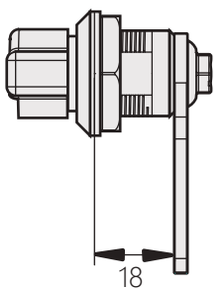

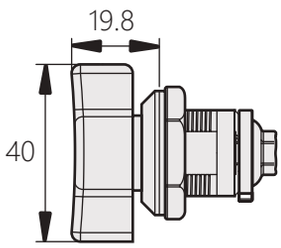

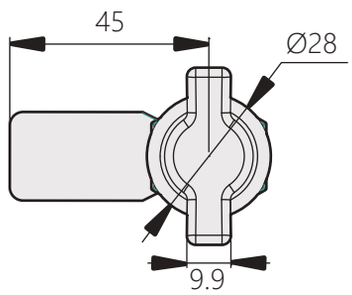

開孔尺寸

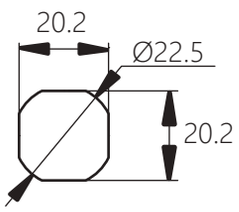

防水型圓鎖

Quarter Turn Waterproof Lock

TM-7143



商品介紹:

- ■防水設計:內部設置 O 型環，外部使用防水墊片
- ■可自行加裝掛鎖，增加防盜性
- ■表面處理:黑色塗裝,髮絲紋拋光
- ■材質:鋅合金,不鏽鋼
- ■檔片選擇: TH-4500-S, TH-4500
  TH-4507-S, TH-4507
  TH-4516-S, TH-4516
- ■用途:機櫃、配分電盤、機械設備

Product description:

- ■Waterproof: Using O-ring inside and sheet packing
- ■Can install the pad lock, prevent stealing
- ■Material: Zinc Alloy,Stainless steel
- ■Surface treatment: Black paint, Polished hairline
- ■Cam selection: TH-4500-S, TH-4500
  TH-4507-S, TH-4507
  TH-4516-S, TH-4516
- ■Uses: Server Rack, Communication equipment, Control Panel, Cabinet Door, Machinery Equipment.

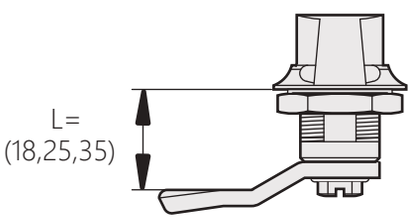

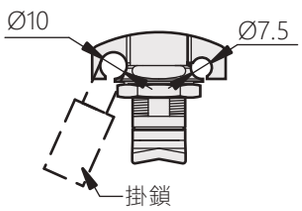

商品型號	材質
TM-7143-1	不鏽鋼
TM-7143-2	鋅合金

開孔尺寸

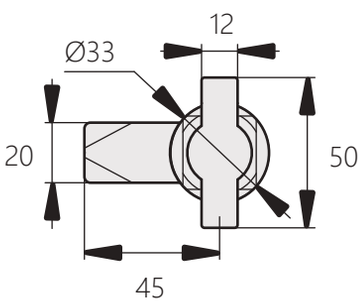

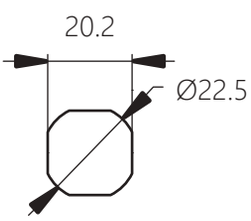

[TH-4500-S]
[TH-4500]

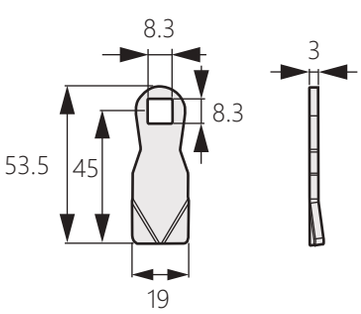

商品型號	材質
TH-4500	鐵
TH-4500-S	不鏽鋼

[TH-4507-S]
[TH-4507]

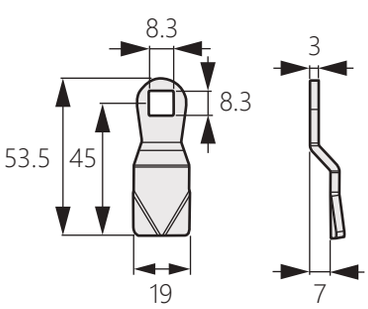

商品型號	材質
TH-4507	鐵
TH-4507-S	不鏽鋼

[TH-4516-S]
[TH-4516]

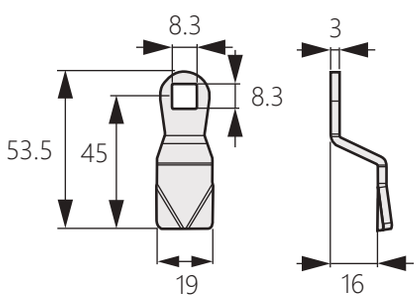

商品型號	材質
TH-4516	鐵
TH-4516-S	不鏽鋼

小型防水把手鎖

Waterproof Cam Latch

TM-7144



商品介紹:

- 材質:鎖體-鋅合金、手柄-尼龍玻璃纖維、擋片-鐵
- 適用板厚:1~8mm
- 標準擋片為鉤型擋片
- 檔片選擇: TH-4500-S, TH-4500
  TH-4507-S, TH-4507
  TH-4516-S, TH-4516

Product description:

- Material: Main Body - Zinc alloy, Handle - PA, Cam - iron
- Applicable plate thickness: 1~8mm
- Standard blank is a hook-type blank
- Cam selection: TH-4500-S, TH-4500
  TH-4507-S, TH-4507
  TH-4516-S, TH-4516

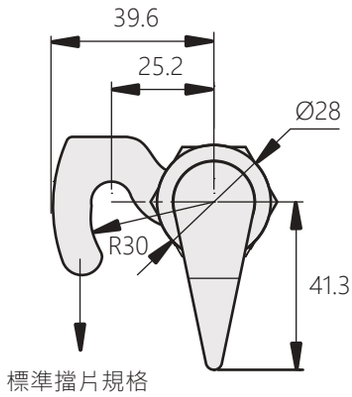

標準擋片規格

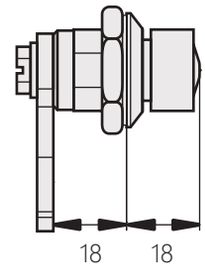

開孔尺寸

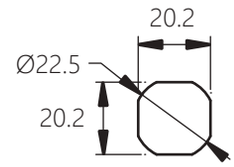

[TH-4500-S]
[TH-4500]

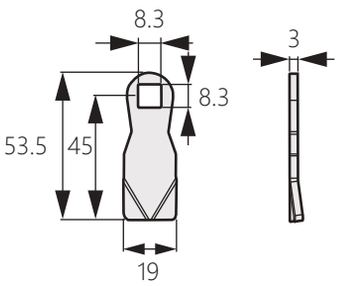

商品型號	材質
TH-4500	鐵
TH-4500-S	不鏽鋼

[TH-4507-S]
[TH-4507]

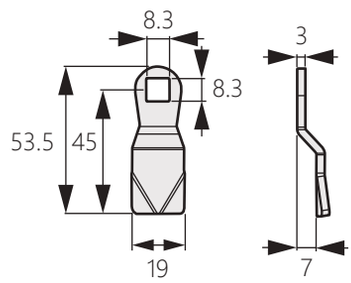

商品型號	材質
TH-4507	鐵
TH-4507-S	不鏽鋼

[TH-4516-S]
[TH-4516]

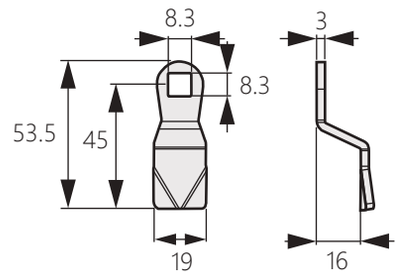

商品型號	材質
TH-4516	鐵
TH-4516-S	不鏽鋼

T型把手鎖 TM-019

Cam lock



商品介紹:

- 鎖芯上配有防水圈，起到防水和阻尼功能
- T型旋轉手柄，方便、省力
- 左右兼用型
- 材質:鋅合金(ZDC)、冷軋板
- 表面處理:黑色烤漆
- 用途:控制箱、電力箱、機箱機櫃

Product description:

- The cylinder with a waterproof ring, with waterproof and damping performance
- Rotating T-handle, convenient and laborsaving
- Left and right type
- Material: Zinc alloy (ZDC), Cold rolled sheet
- Surface treatment: Black paint
- Uses: Control box、power box、 chassis cabinet.

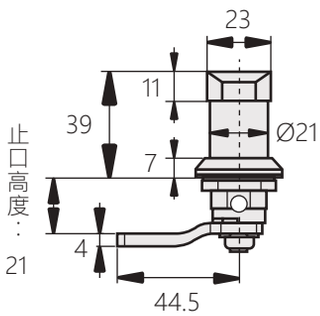

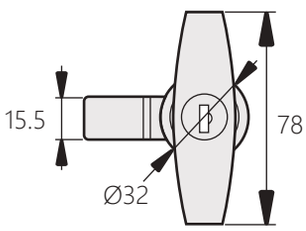

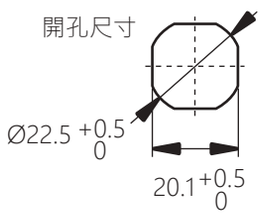

圓頭鎖 TM-026

Cam lock

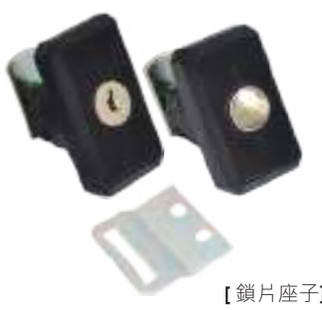

[鎖片座子]

商品介紹:

- 左右兼用型
- 材質:鋅合金(ZDC)
- 表面處理:黑亞光
- 用途:控制箱、電力箱、櫃箱機櫃

Product description:

- Suitable for left and right side opening
- Material: Zinc alloy (ZDC)
- Surface treatment: Matt black
- Uses: Chassis cabinet, control box, power box

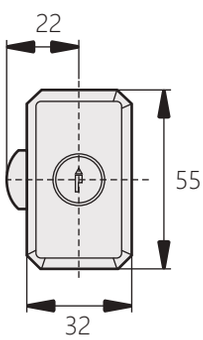

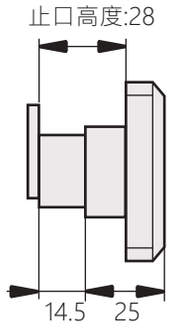

開孔尺寸

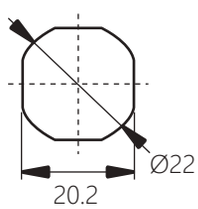

商品型號	
有鎖	無鎖
TM-026-1	TM-026-2

T型手柄式防水門扣

T Shaped Handle Waterproof Cam Latch

TM-7146



商品介紹:

- 防水設計:內部設置 O 型環，外部使用防水墊片
- 材質:鋅合金
- 表面處理:黑色塗裝
- 適用板厚:1~6 mm
- 檔片選擇:TH-4500-S, TH-4500
  TH-4507-S, TH-4507
  TH-4516-S, TH-4516
- 用途:機櫃、配分電盤、機械設備

Product description:

- Waterproof: Using O-ring inside and sheet packing.
- Material: Zinc Alloy (ZDC)
- Surface treatment: Black Powder Coated
- Panel Thickness: 1~6 mm
- Cam selection: TH-4500-S, TH-4500
  TH-4507-S, TH-4507
  TH-4516-S, TH-4516
- Uses: Server Rack, Communication equipment, Control Panel, Cabinet Door, Machinery Equipment.

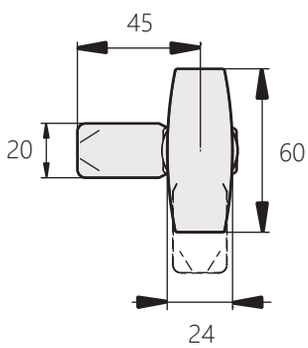

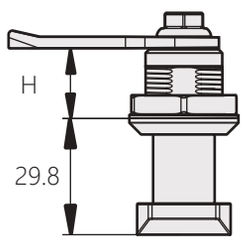

開孔尺寸

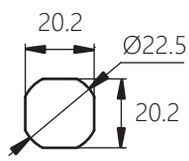

擋片型號	擋片深度H
TH-4500	18
TH-4507	25
TH-4516	35

[TH-4500-S] [TH-4500]

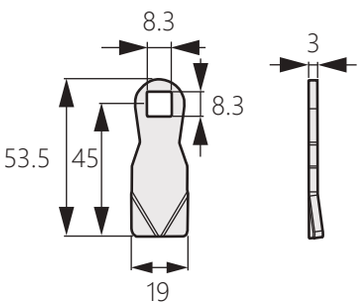

商品型號	材質
TH-4500	鐵
TH-4500-S	不鏽鋼

[TH-4507-S] [TH-4507]

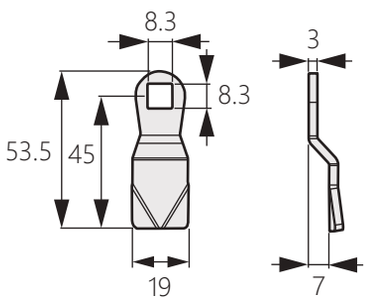

商品型號	材質
TH-4507	鐵
TH-4507-S	不鏽鋼

[TH-4516-S] [TH-4516]

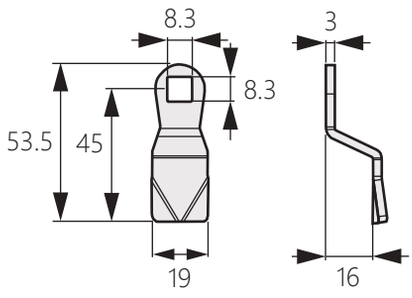

商品型號	材質
TH-4516	鐵
TH-4516-S	不鏽鋼

防水型圓鎖

Waterproof Cam Lock

TM-7362



商品介紹:

- ■防水設計:內部設置 O 型環，外部使用防水墊片
- ■左右開門通用：透過變更門擋片以及方向限位擋板的方向，即可實現左右開門使用
- ■材質:鋅合金
- ■表面處理:鍍鉻
- ■檔片選擇: TH-4500-S, TH-4500
  TH-4507-S, TH-4507
  TH-4516-S, TH-4516
- ■用途:戶外箱體、機櫃、配分電盤、機械設備

Product description:

- ■Waterproof: Using O-ring inside and sheet packing For both left-hand and right-hand use:The left-hand and right-hand use can be changed by reversing the cam.
- ■Material: Zinc Alloy (ZDC)
- ■Surface treatment: Electroplated With Chrome
- ■Cam selection: TH-4500-S, TH-4500
  TH-4507-S, TH-4507
  TH-4516-S, TH-4516
- ■Uses: Communication cubicle, Control Panel, Cabinet Door, Machinery Equipment.

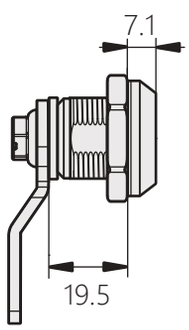

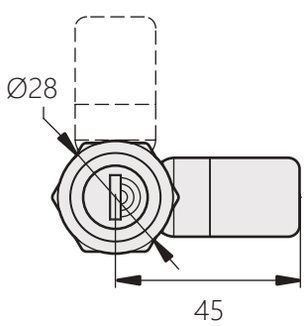

開孔尺寸

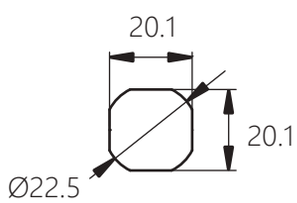

[TH-4500-S
TH-4500]

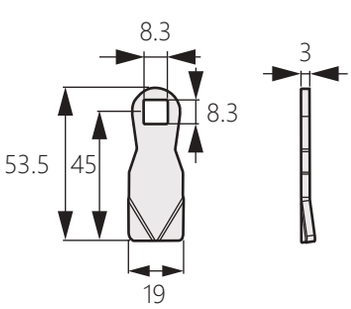

商品型號	材質
TH-4500	鐵
TH-4500-S	不鏽鋼

[TH-4507-S
TH-4507]

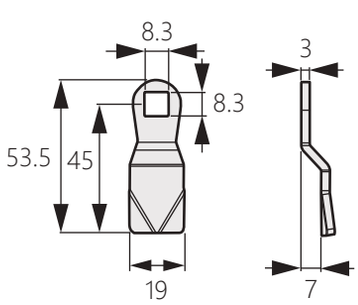

商品型號	材質
TH-4507	鐵
TH-4507-S	不鏽鋼

[TH-4516-S
TH-4516]

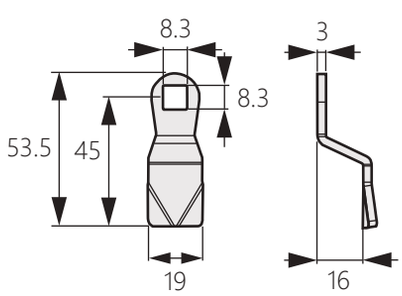

商品型號	材質
TH-4516	鐵
TH-4516-S	不鏽鋼

按壓式門鎖

TM-7530

Push To Close Latch



商品介紹:

- 按壓按鈕開啟門板，門板回推自動關閉
- 材質:尼龍
- 用途:置物櫃、通信設備、機櫃、控制箱
- 備註:固定扣與取手為標準配件

Product description:

- Push button opening, Push door-close automatically
- Material: PA
- Uses: Locker,Communicationsequipment, Control Panel, Cabinet Door, Machinery Equipment.
- Note: The catcher and pull are supplied.

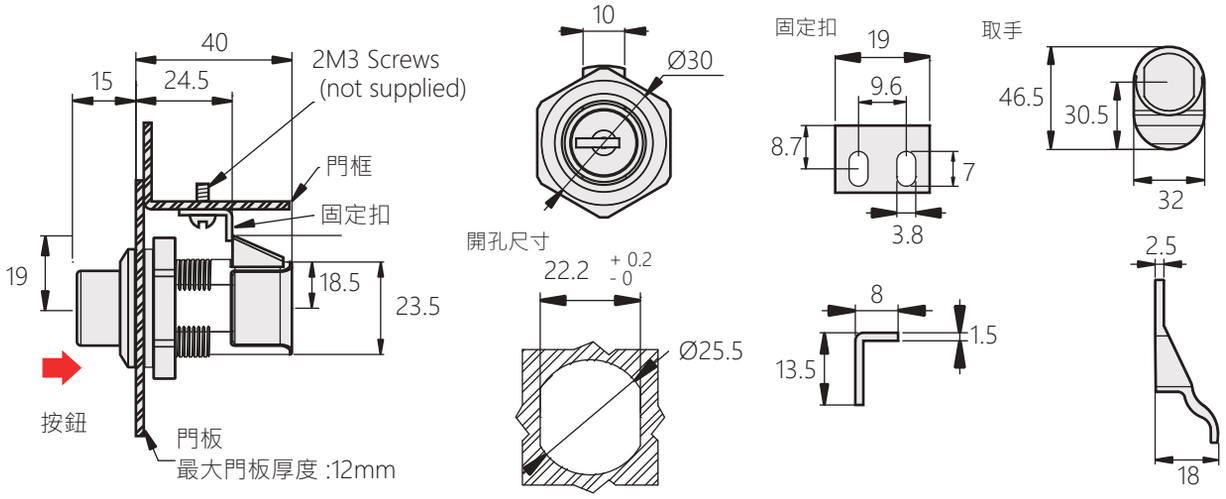

單孔安裝自調型壓縮式門鎖

TM-821

Single-Hole Mount Self-Adjusting Compression Latches

商品介紹:

- 當關閉時，門擋片沿螺柱運動，直到咬合門框為止，然後再加以旋轉調節鎖的壓縮力。要開啟時，輕微旋轉，釋放壓縮並旋開門擋片，使之脫離門框。用戶可調整的間距和壓縮力適合不同的安裝方式
- 材質:主體 - 尼龍玻璃纖維擋片 - 鐵 (鍍鋅)



Product description:

- When closing, pawl rides along threaded shaft until engaging frame, then an extra turn adjusts the amount of compression applied. To open, a short turn releases the compression and rotates pawl away from frame. User adjustable grip and compression accommodates a wide range of installation variations and changes.
- Material: Main Body-PA ; Cam-Steel (Zinc Plated)

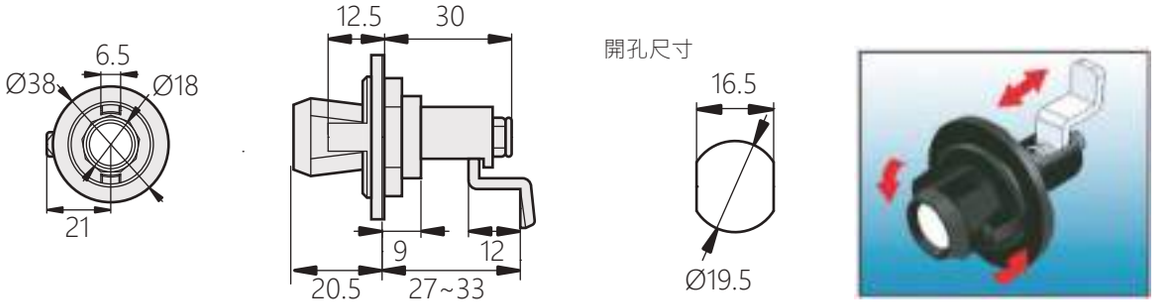

防水迫緊門扣

Rotation Type Compression Latch

TM-813

ZDC 鋅 CAD



商品介紹:

- 適用於防震動、密封、高品質的組件，能快速安全關閉門板。 迫緊動作可將門板及門框拉緊，以確保密封狀態，並有助於減少或消除因震動所導致的噪音以及撞擊聲，更可防止因搖晃或震動而導致的意外開啟
- 材質:主體 - 鋅合金 (ZDC)、門擋片 - 鐵
- 表面處理:鎖體 - 黑色塗裝、門擋片 - 鍍鋅
- 用途:軌道交通、航空航天、巴士和客車、特殊用途車

Product description:

- Design aligns the Cam behind the frame and draws it up tight with a single continuous half-turn motion. It’s compression action provides consistent pull-up for environmental sealing in gasket applications, and helps reduce or eliminate noise and rattles caused by vibration. Over-center latching resists accidental opening due to shock or vibration.
- Material: Main Body-Zinc Alloy (ZDC) ; Cam-Steel
- Surface treatment: Main Body-Black Powder Coated ; Cam-Zinc Plated
- Uses: Rail aeropase,bus&coach,specialty vehicle.

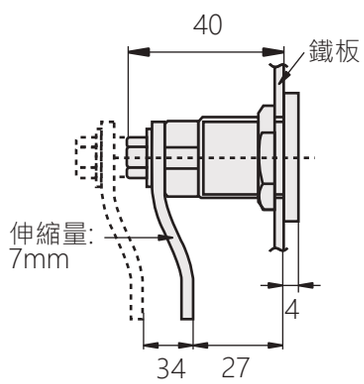

［TH-4500］

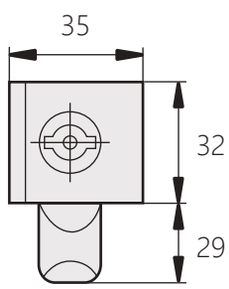

［TH-4507］

開孔尺寸

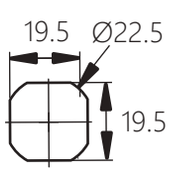

［TH-4516］

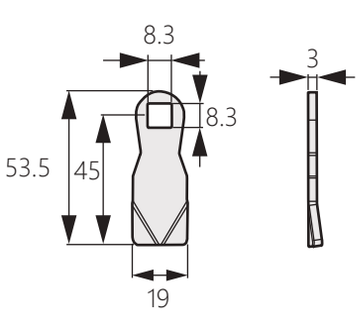

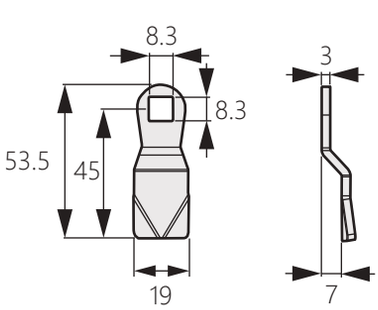

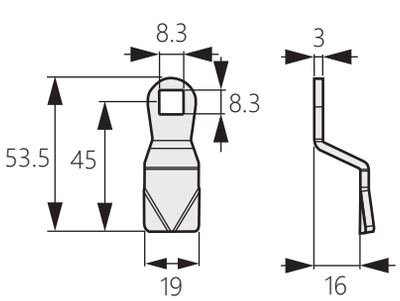

不鏽鋼防水迫緊式鎖

TM-8160

Stainless steel compression latch



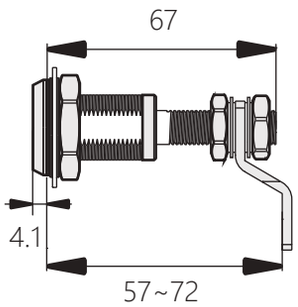

商品介紹:

- 適用於防震動、密封、高品質的組件，能快速安全關閉門板。 迫緊動作可將門板及門框拉緊，以確保密封狀態，並有助於減少或消除因震動所導致的噪音以及撞擊聲，更可防止因搖晃或震動而導致的意外開啟。 採用不鏽鋼材質，耐腐蝕性能優異
- 材質:不鏽鋼304
- 表面處理:拋光
- 用途:戶外箱體、遊艇火車、捷運車廂

Product description:

- Designed for quick, secure closure in applications where vibration, sealing, and quality are paramount. The compression action provides environmental sealing in gasket applications, and helps reduce or eliminate noise and rattles caused by vibration. And also resists accidental opening due to shock or vibration. Corrosion-resistant stainless steel is used.
- Material: Stainless steel 304
- Surface treatment: Polishing
- Uses: Rail, Aerospace ,Bus & Coach , Specialty Vehicle.

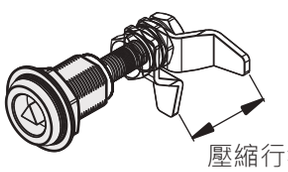

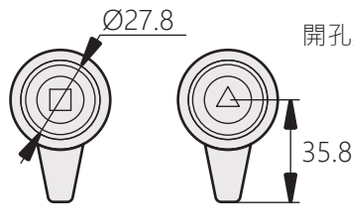

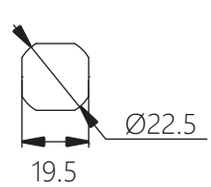

商品型號	鎖芯樣式
TM-8160-1	三角形
TM-8160-2	正方形

防塵機罩鎖

TM-812

Dust hood lock



商品介紹:

- 適用於防震動、密封、高品質的組件，能快速安全關閉門板。 迫緊動作可將門板及門框拉緊，以確保密封狀態，並有助於減少或消除因震動所導致的噪音以及撞擊聲，更可防止因搖晃或震動而導致的意外開啟
- 材質:鋅合金(ZDC)
- 表面處理:黑色塗裝
- 門擋片迫緊行程:7mm
- 用途:軌道交通、航空航天、巴士和客車、特殊用途車

Product description:

- Designed for quick, secure closure in applications where vibration, sealing, and quality are paramount. The compression action provides environmental sealing in gasket applications, and helps reduce or eliminate noise and rattles caused by vibration. And also resists accidental opening due to shock or vibration.
- Material: Zinc Alloy (ZDC)
- Surface treatment: Blue Gray Powder Coated
- Door stop piece pressing stroke: 7mm
- Uses: Rail aeropase,bus&coach,specialty vehicle.

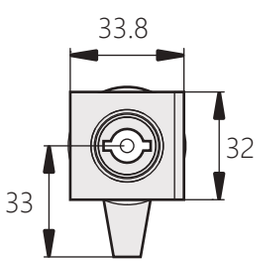

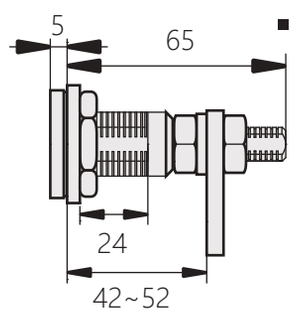

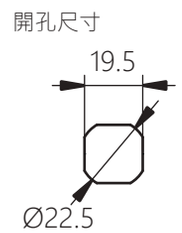

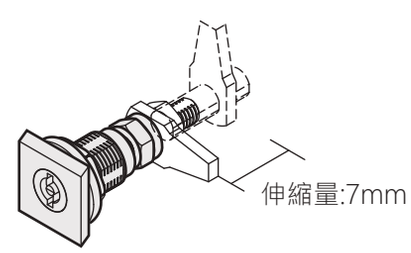

壓縮式門鎖

Compression door lock

TM-8161

ZDC 鋅 CAD



商品介紹:

- 大型,可調間距
- 材質:鋅合金
- 表面處理:黑色塗裝,電鍍亮鉻
- 備註:多種鎖頭選擇，可選配擋片與取手(TM-2014), 防水蓋(TM-2015)

Product description:

- Large, adjustable pitch
- Material: Zinc alloy
- Surface treatment: Black coating, bright chrome plating
- Note: Multiple lock options, optional stop ,a variety of lock options, optional baffle and pick (TM-2014), Waterproof cover (TM-2015).

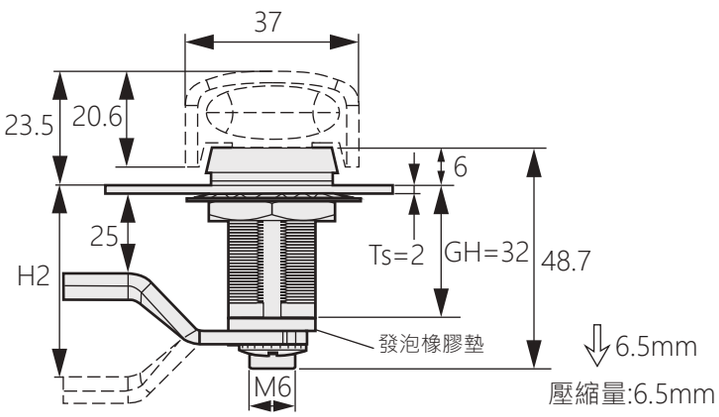

TM-2014

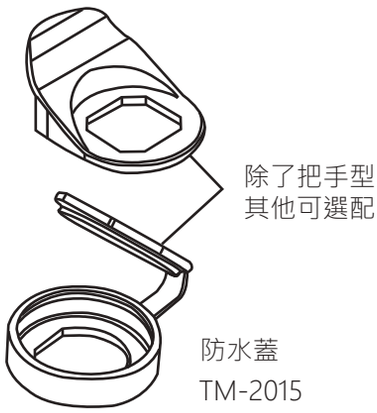

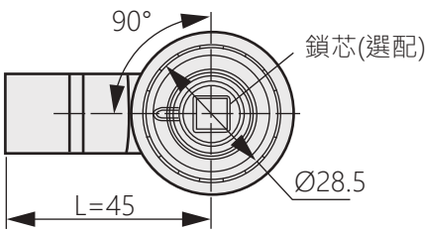

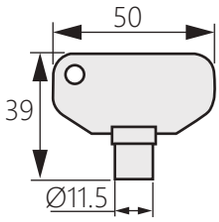

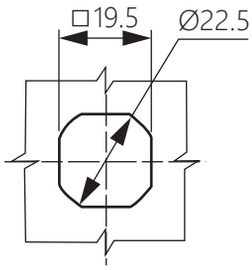



TM-8161-1 鑰匙操縱型 | TM-8161-2 雙翅型 | TM-8161-3 三角7 | TM-8161-4 三角8 | TM-8161-5 四方7

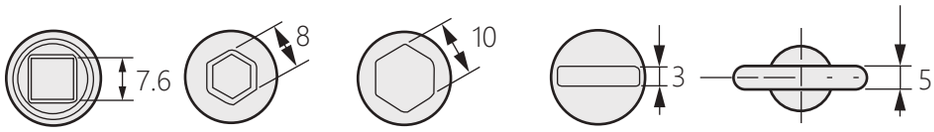

TM-8161-6 四方8 | TM-8161-7 內六角8 | TM-8161-8 外六角10 | TM-8161-9 一字槽型 | TM-8161-10 把手型

壓縮式門鎖

Compression door lock

TM-8162

ZDC 鋅 CAD



商品介紹:

- 大型,可調間距
- 材質:鋅合金
- 表面處理:黑色塗裝,電鍍亮鉻
- 備註:多種鎖頭選擇，可選配擋片可選配擋片與取手(TM-2014),防水蓋(TM-2015)

Product description:

- Large, adjustable pitch
- Material: Zinc alloy
- Surface treatment: Black coating, bright chrome plating
- Note: Multiple lock options, optional stop ,a variety of lock options, optional baffle and pick (TM-2014), Waterproof cover (TM-2015).

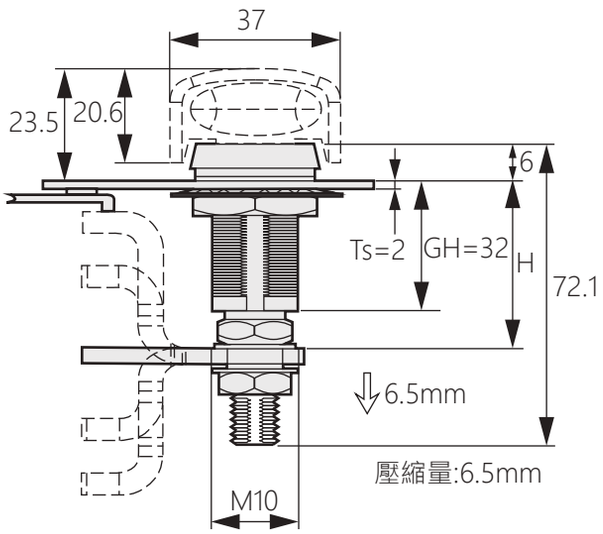

TM-2014

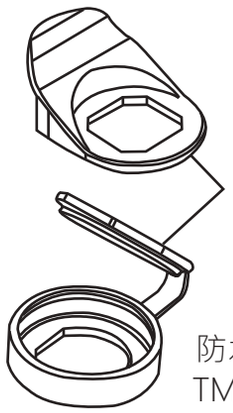

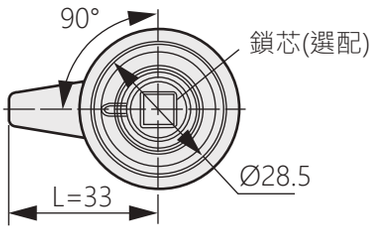

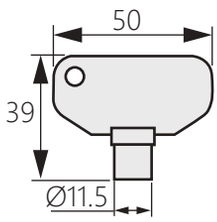

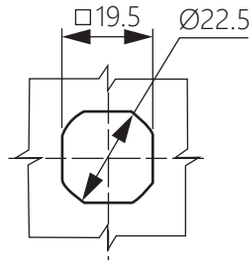

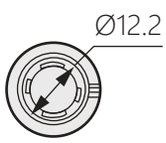

TM-8162-1
鑰匙操縱型

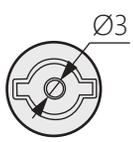

TM-8162-2
雙翅型



TM-8162-3
三角7

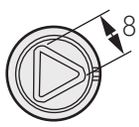

TM-8162-4
三角8

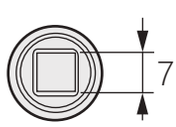

TM-8162-5
四方7

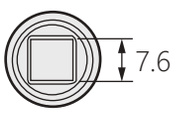

TM-8162-6
四方8

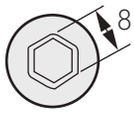

TM-8162-7
內六角8

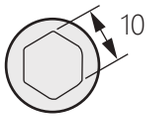

TM-8162-8
外六角10

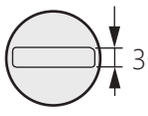

TM-8162-9
一字槽型

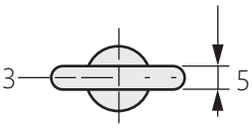

TM-8162-10
把手型

擋片型號	間距	
	最小	最大
TH-1510	11.4	27.2
TH-2510	25.4	41.1
TH-3510	38.9	54.6
TH-4510	52.6	68.3
TH-5510	66.3	76.2

防水迫緊式門扣

Waterproof forced door buckle

TM-8163

ZDC 鋅 CAD



商品介紹:

- 門擋片迫緊行程:5m/m
- 適用門板厚度:0.8~12m/m
- 材質:主體-鋅合金、門擋片-鐵
- 表面處理:主體-黑色塗裝、門擋片-鍍鋅
- 適用於防震動、密封、高品質的組件，能快速安全關閉門板。迫緊動作可將門板及門框拉緊，以確保密封狀態，並有助於減少或消除因震動所導致的噪音以及撞擊聲，更可防止因搖晃或震動而導致的意外開啟。

Product description:

- Compression distance: 5m/m
- Panel thickness: 0.8~12m/m
- Material: Main body-Zinc;cam-steel
- Surface treatment: Main body-block power coated, cam-zinc plated
- Design aligns the cam behind the frame and draws it up tight with a single continuous half-turn motion. Its compressionaction provides consistant pull-up for environmental sealing in gasket applications,snd helps reduce or eliminate noise and rattles caused by vibration. Over-center lactching resists accidental opening due to shock or vibration.

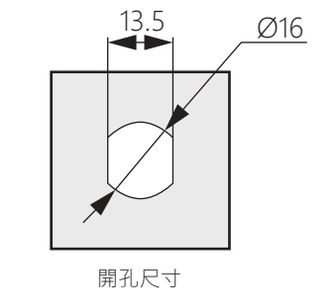

開孔尺寸

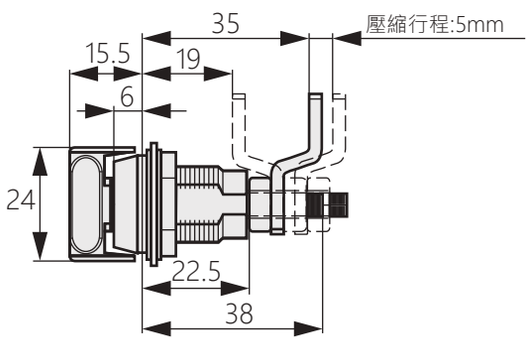

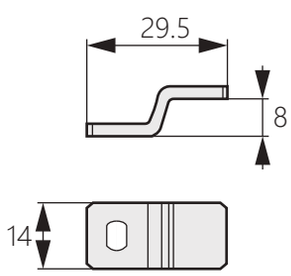

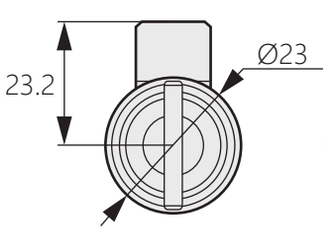

TM-8163-1

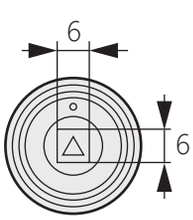

TM-8163-2



TM-8163-3

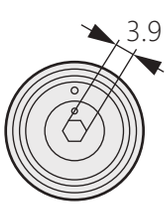

TM-8163-4

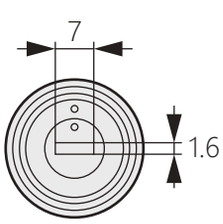

TM-8163-5

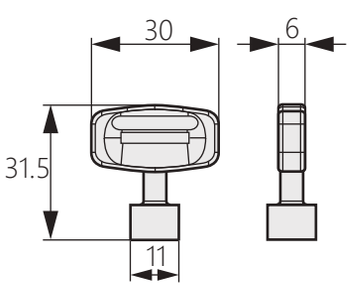

TM-8163-2 KEY

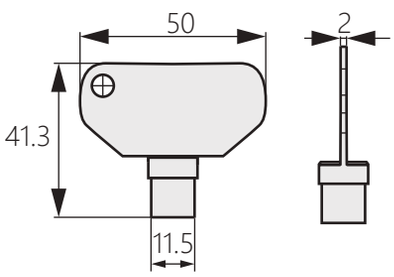

TM-8163-3 KEY

商品型號	樣式
TM-8163-1	旋轉式
TM-8163-2	四角型
TM-8163-3	棘型
TM-8163-4	內六角
TM-8163-5	一字型

不鏽鋼防水迫緊式圓鎖

TM-8164

Stainless Steel Compression Latch



商品介紹:

- 適用於防震動、密封、高品質的組件，能快速安全關閉門板。迫緊動作可將門板及門框拉緊，以確保密封狀態，並有助於減少或消除因震動所導致的噪音以及撞擊聲，更可防止因搖晃或震動而導致的意外開啟 採用不鏽鋼材質，耐腐蝕性能優異
- 材質:不鏽鋼 304
- 表面處理:拋光
- 用途:戶外箱體、遊艇、火車、捷運車廂

Product description:

- Designed for quick, secure closure in applications where vibration, sealing, and quality are paramount. The compression action provides environmental sealing in gasket applications, and helps reduce or eliminate noise and rattles caused by vibration. And also resists accidental opening due to shock or vibration. Corrosion-resistant stainless steel is used.
- Material: Cast Stainless Steel 304 (SUS 304)
- Surface treatment: Polish
- Uses: Rail、Aerospace 、Bus & Coach、Specialty Vehicle.

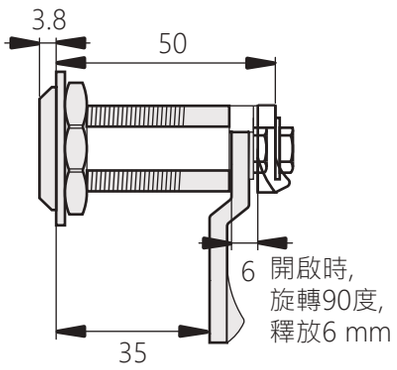



開孔尺寸

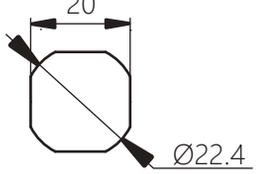

防水型圓鎖

TM-7360

Waterproof Cam Lock



商品介紹:

- 防水設計:內部設置 O 型環，外部使用防水墊片 左右開門通用:透過變更門擋片以及方向限位擋板的方向，即可實現左右開門使用
- 材質:鋅合金
- 表面處理:鍍鉻
- 用途:戶外箱體、機櫃、配分電盤、機械設備

Product description:

- Waterproof: Using O-ring inside and sheet packing. For both left-hand and right-hand use:The left-hand and right-hand use can be changed by reversing the cam and stopper plate.
- Material: Zinc Alloy (ZDC)
- Surface treatment: Electroplated With Chrome
- Uses: Communication cubicle, Control Panel,Cabinet Door, Machinery Equipment.

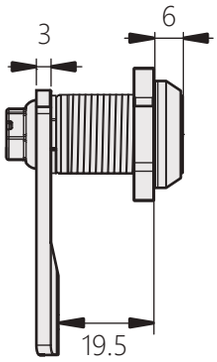

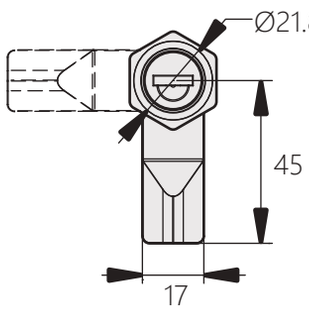

開孔尺寸

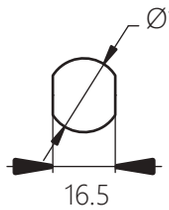



防水迫緊門扣

Rotation Type Compression Latch

TM-8166



商品介紹:

- 適用於防震動、密封、高品質的組件，能快速安全關閉門板。 迫緊動作可將門板及門框拉緊，以確保密封狀態，並有助於減少或消除因震動所導致的噪音以及撞擊聲，更可防止因搖晃或震動而導致的意外開啟
- 材質:鋅合金
- 表面處理:鎖體 - 黑色烤漆、檔片 - 鍍鋅
- 檔片選擇: TH-4500-S, TH-4500
  TH-4507-S, TH-4507
  TH-4516-S, TH-4516
- 用途:軌道交通、航空航天、巴士和客車、特殊用途車

Product description:

- Designed for quick, secure closure in applications where vibration, sealing, and quality are paramount. The compression action provides environmental sealing in gasket applications, and helps reduce or eliminate noise and rattles caused by vibration. And also resists accidental opening due to shock or vibration.
- Material: Zinc Alloy (ZDC)
- Surface treatment: Body-Black Powder Coated, Cam-Zinc Plated
- Uses: Rail transit, aerospace, bus and bus, special purpose vehicles.

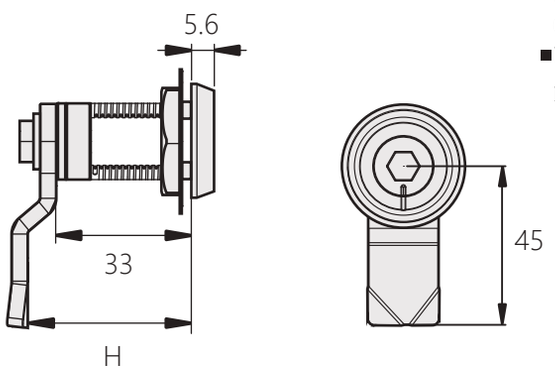

使用例

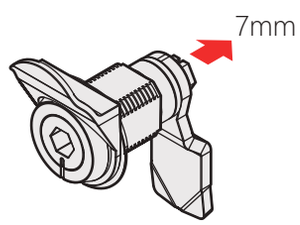

開孔尺寸

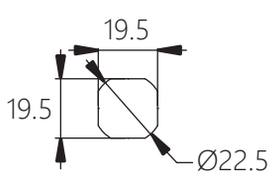

擋片型號	深度H
TH-4500	33
TH-4507	40
TH-4516	49

可另選購搭配 TH-2014

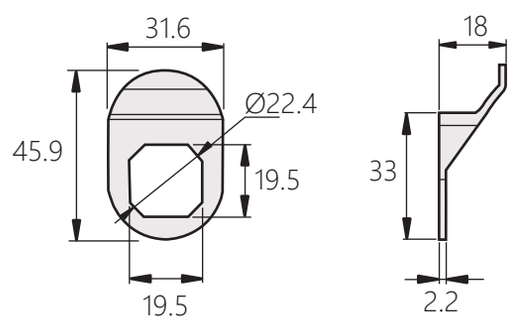

[TH-4500-S]
[TH-4500]

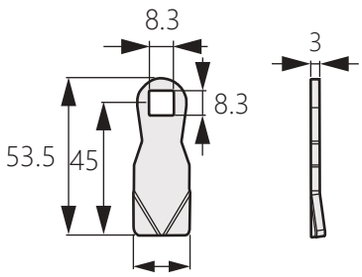

商品型號	材質
TH-4500	鐵
TH-4500-S	不鏽鋼

[TH-4507-S]
[TH-4507]

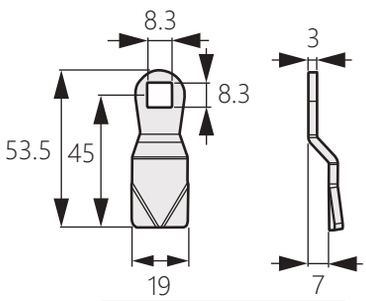

商品型號	材質
TH-4507	鐵
TH-4507-S	不鏽鋼

[TH-4516-S]
[TH-4516]

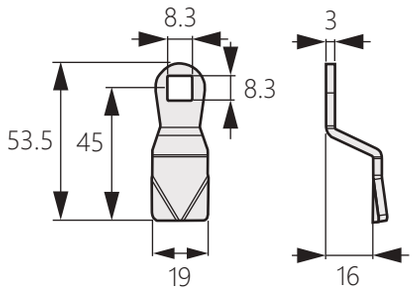

商品型號	材質
TH-4516	鐵
TH-4516-S	不鏽鋼

面板鎖

TM-1003

Cam lock



商品介紹:

- 具有防塵、防水功能
- 鎖芯阻尼回饋性良好
- 鎖片:鋅合金鑄造
- 材質:鋅合金(ZDC）、塑膠
- 表面處理:納米噴塗
- 用途:櫃門、網絡機櫃、通信機櫃
- 備註:只提供一種止口高度

Product description:

- Left and right
- With waterproof and dustproof function
- Cylinder with good damping feedback
- Pawl is Zinc Alloy casting
- Material: Zinc Alloy (ZDC)
- Surface treatment: Nano Spray
- Uses: Cabinet, network cabinet, communication cabinet.
- Note: Only provide one spigot height.

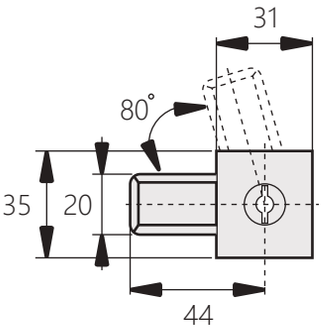

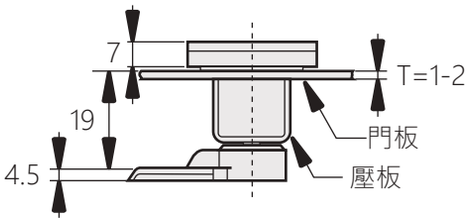

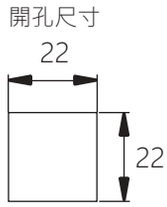

圓頭鎖

TM-1004

Cam lock



商品介紹:

- 具有防塵、防水功能
- 小巧，易於安裝於空間較小的門板上
- 材質:鋅合金(ZDC)、冷軋鋼板
- 表面處理:鍍亮鉻、黑色烤漆
- 用途:小型櫃門、信箱、電箱櫃
- 備註:鎖片止口高度為18mm

Product description:

- With dustproof and waterproof function
- Small exquisite and easy to install on small space door panel
- Material: Zinc alloy (ZDC), Cold rolled steel
- Surface treatment: Bright chrome, black paint
- Uses: Cabinet, mail box, distribution box.
- Note: The pawl spigot height is 18mm

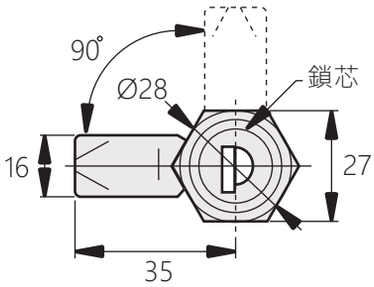

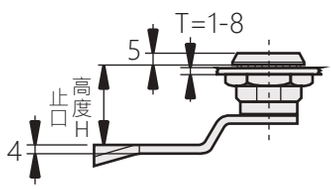

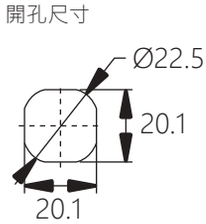

迫緊門鎖
Forced door lock

TM-18



TM-181
TM-182
TM-183

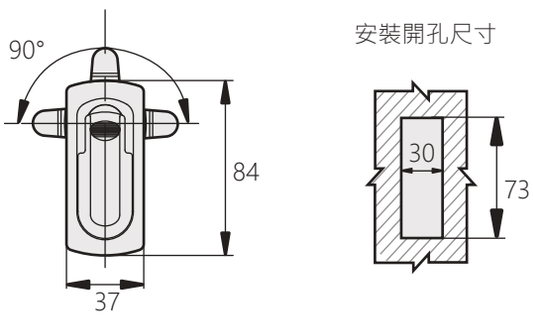

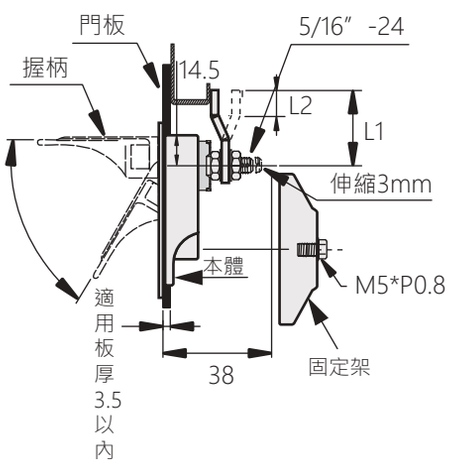

商品型號	擋片型式	安裝孔與門框建議距離(E)
TM-181	TH-14~TH-19 TH-44，TH-45	8-10
TM-182	TH-14，TH-15 TH-16	11-13
TM-183	TH-17，TH-18 TH-19	26-28

安裝示意圖

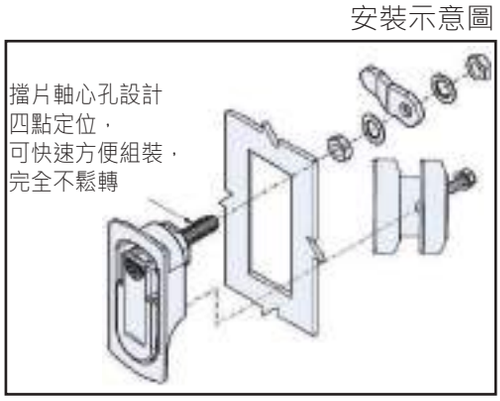

商品介紹:

- ■開啟時擋片可垂直後退3mm，使握柄迴轉順暢
  關門時擋片可垂直前移3mm，使門板與箱體迫緊不鬆動
- ■左、右、上三方向兼用型
- ■耐熱、耐腐蝕、防塵性
- ■防塵、防水(IP66)
- ■本體與掀把的材質-TM-181,TM-182,TM-183:鋅合金
- ■顏色:霧鉻、黑色、亮鉻
- ■軸心:鐵(L1213)，鍍鋅
  擋片:鐵(SPHC)，鍍鋅
- ■擋片:
  TM-181:短軸型
  TM-182:標準軸型
  TM-183:長軸型

Product description:

- ■Once opened, the pawl will be 3mm pull-up reversed to allow lever rotated smoothly.
- ■Once closed, the pawl will be 3mm pull-up forward to compress the panel and cabinet box securely.
- ■Left, right and top opening
- ■Heat, corrosion and dust resistance
- ■Dust-resistant and waterproof (IP66).
- ■Ontology & amp; hatchback-material
  TM-181,TM-182,TM-183: Zinc alloy
- ■Color: Fog chrome, black, bright chrome
- ■Axis Material:
  iron (L1213),
  Galvanized lock material:
  iron (SPHC), galvanized
- ■Block:
  TM-181: Short shaft type
  TM-182: Standard shaft
  TM-183: Long axle type

商品型號			擋片型式	擋片夾持距離		L1	L2
外觀霧鉻	外觀黑色	外觀亮鉻		向內	向外		
TM-181-1-1	TM-181-2-1	TM-181-3-1	TH-14	21	31	36	12
TM-181-1-2	TM-181-2-2	TM-181-3-2	TH-17			51	27
TM-181-1-3	TM-181-2-3	TM-181-3-3	TH-15	13	39	36	12
TM-181-1-4	TM-181-2-4	TM-181-3-4	TH-18			51	27
TM-181-1-5	TM-181-2-5	TM-181-3-5	TH-16	5	47	36	12
TM-181-1-6	TM-181-2-6	TM-181-3-6	TH-19			51	27
TM-182-1-1	TM-182-2-1	TM-182-3-1	TH-14	27-37	37-47	36	12
TM-182-1-2	TM-182-2-2	TM-182-3-2	TH-17			51	27
TM-182-1-3	TM-182-2-3	TM-182-3-3	TH-15	19-29	45-55	36	12
TM-182-1-4	TM-182-2-4	TM-182-3-4	TH-18			51	27
TM-182-1-5	TM-182-2-5	TM-182-3-5	TH-16	11-21	53-63	36	12
TM-182-1-6	TM-182-2-6	TM-182-3-6	TH-19			51	27
TM-183-1-1	TM-183-2-1	TM-183-3-1	TH-14	44-54	54-64	36	12
TM-183-1-2	TM-183-2-2	TM-183-3-2	TH-17			51	27
TM-183-1-3	TM-183-2-3	TM-183-3-3	TH-15	36-46	62-72	36	12
TM-183-1-4	TM-183-2-4	TM-183-3-4	TH-18			51	27
TM-183-1-5	TM-183-2-5	TM-183-3-5	TH-16	28-38	70-80	36	12
TM-183-1-6	TM-183-2-6	TM-183-3-6	TH-19			51	27

迫緊門鎖擋片

TM-18

Forced door lock Baffle

[TH-14]

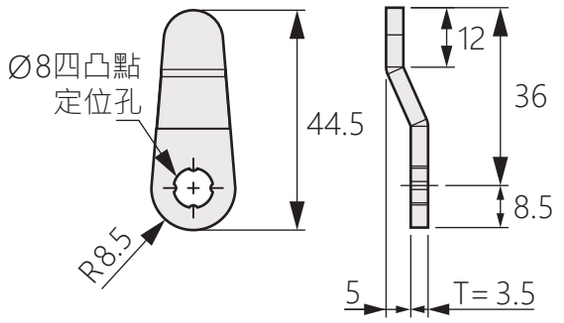

[TH-15]

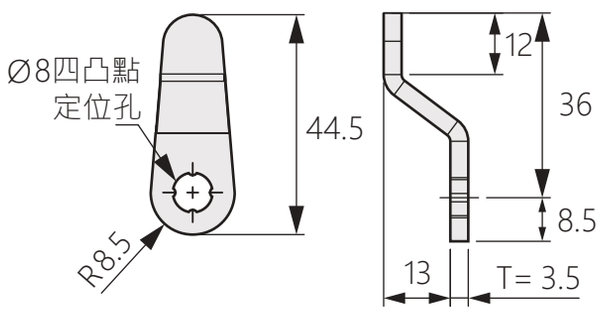

[TH-16]

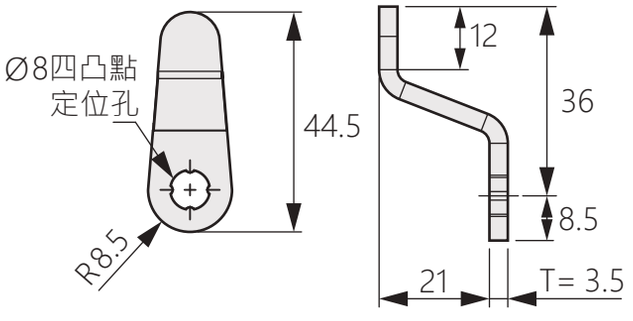

[TH-44]

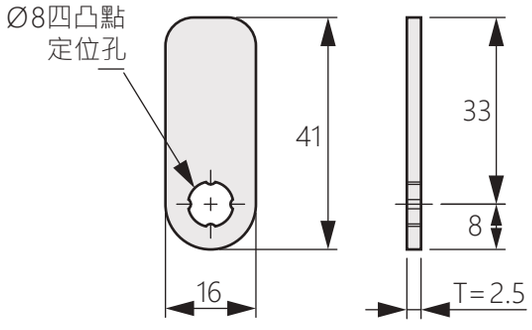

[TH-17]

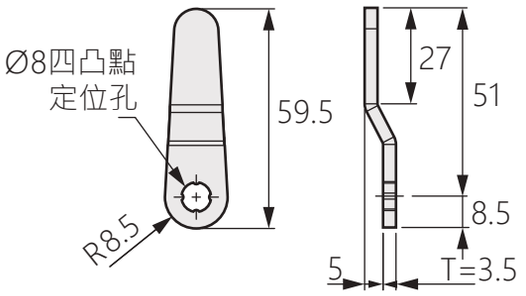

[TH-18]

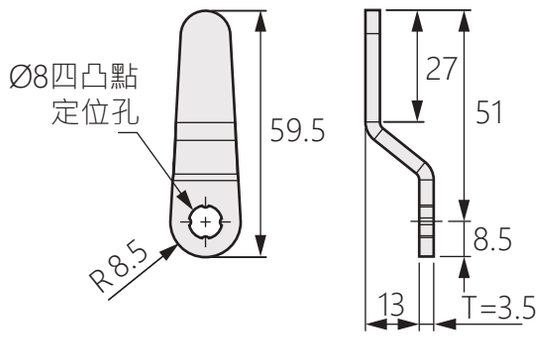

[TH-19]

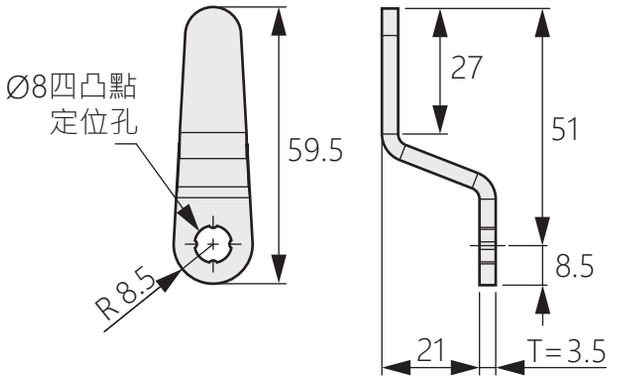

[TH-45]

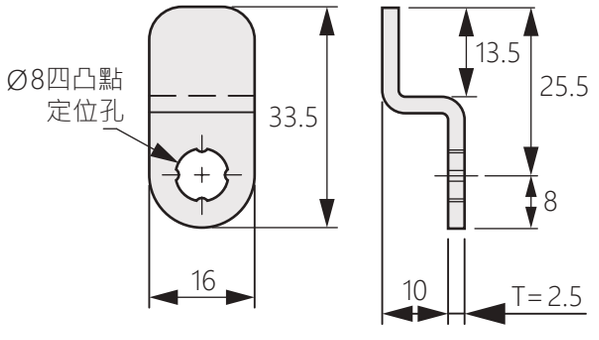

迫緊門鎖

TM-19

Forced door lock



TM-191
TM-192
TM-193

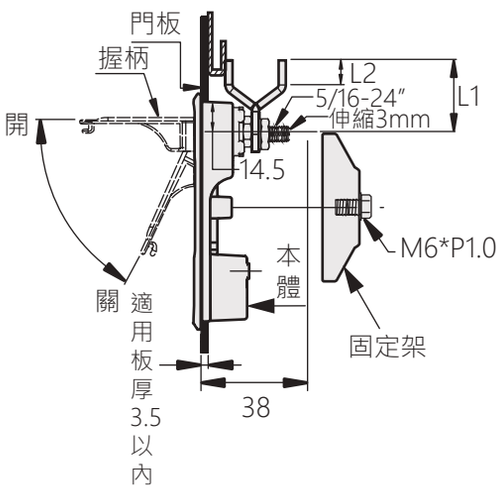

商品介紹:

- ■耐熱、耐腐蝕、防塵性
- ■左、右、上三方向兼用型
- ■標準軸及長軸可微調鬆緊度
- ■防塵、防水(IP66)
- ■材質:鋅合金
- ■表面處理:本體黑色+掀把鍍鉻、黑色
- ■開啟後，擋片可後退3mm，握柄可迴轉順暢
- ■關門後，擋片前縮3mm，使門板與箱體迫緊不鬆動
- ■開啟時不受鑰匙干擾即可順暢旋轉握柄
- ■用途:配電盤、船舶機器、箱體門板、藥品器具、車輛

Product description:

- ■Heat, corrosion and dust resistance
- ■Left, right, and upper three directions
- ■Standard and long axes for fine adjustment of tightness
- ■Dustproof and waterproof (IP66)
- ■Material: Zinc alloy
- ■Surface treatment: Black body+Chrome lever, black
- ■When opened, the flap can be retracted by 3mm, and the handle can be rotated smoothly.
- ■After closing the door, the front of the baffle is shrunk by 3mm, so that the door panel and the box are not tightened
- ■Smoothly rotate the handle without opening the key when it is turned on
- ■Uses: Communication switchboards, ship machines, cabinet door panels,Medicine appliances, vehicles.

商品型號		擋片型式	擋片夾持距離		L1	L2
本體黑色 掀把鍍鉻	外觀黑色		向內	向外		
TM-191-1-1	TM-191-2-1	TH-44	26		33	-
TM-191-1-2	TM-191-2-2	TH-45	36		25.5	13.5
TM-191-1-3	TM-191-2-3	TH-14	21	31	36	12
TM-191-1-4	TM-191-2-4	TH-17			51	27
TM-191-1-5	TM-191-2-5	TH-15	13	39	36	12
TM-191-1-6	TM-191-2-6	TH-18			51	27
TM-191-1-7	TM-191-2-7	TH-16	5	47	36	12
TM-191-1-8	TM-191-2-8	TH-19			51	27
TM-192-1-1	TM-192-2-1	TH-14	27-37	37-47	36	12
TM-192-1-2	TM-192-2-2	TH-17			51	27
TM-192-1-3	TM-192-2-3	TH-15	19-29	45-55	36	12
TM-192-1-4	TM-192-2-4	TH-18			51	27
TM-192-1-5	TM-192-2-5	TH-16	11-21	53-63	36	12
TM-192-1-6	TM-192-2-6	TH-19			51	27
TM-193-1-1	TM-193-2-1	TH-14	44-54	54-64	36	12
TM-193-1-2	TM-193-2-2	TH-17			51	27
TM-193-1-3	TM-193-2-3	TH-15	36-46	62-72	36	12
TM-193-1-4	TM-193-2-4	TH-18			51	27
TM-193-1-5	TM-193-2-5	TH-16	28-38	70-80	36	12
TM-193-1-6	TM-193-2-6	TH-19			51	27

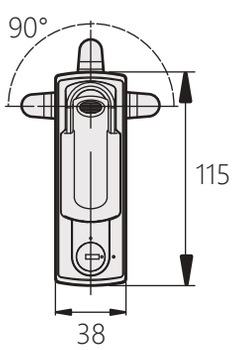

安裝開孔尺寸

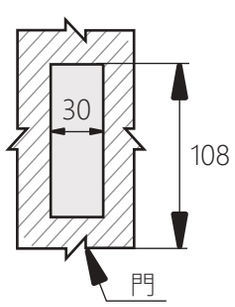

商品型號	擋片型式	安裝孔與門框建議距離(E)
TM-191	TH-14~TH-19 TH-44,TH-45	8-10
TM-192	TH-14,TH-15 TH-16	11-13
TM-193	TH-17,TH-18 TH-19	26-28

安裝示意圖

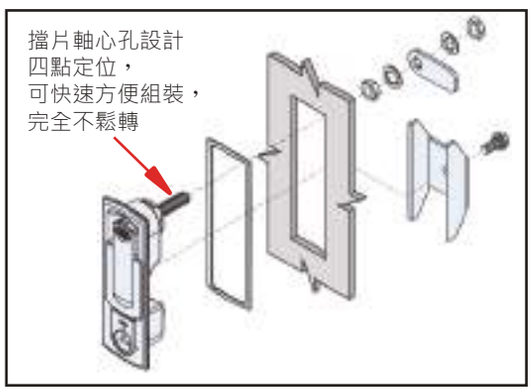

迫緊門鎖擋片

TM-19

Forced door lock Baffle

[TH-14]

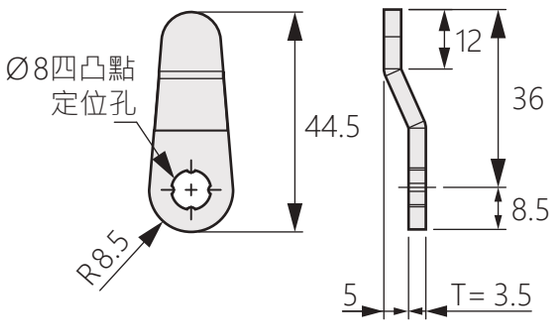

[TH-15]

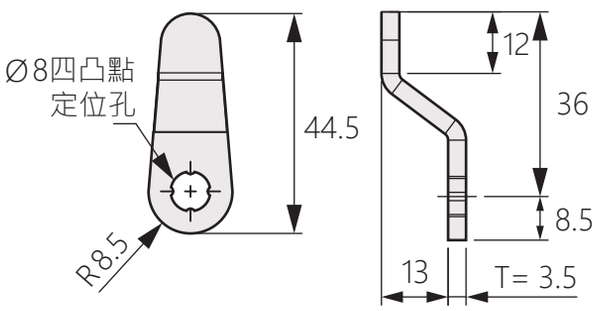

[TH-16]

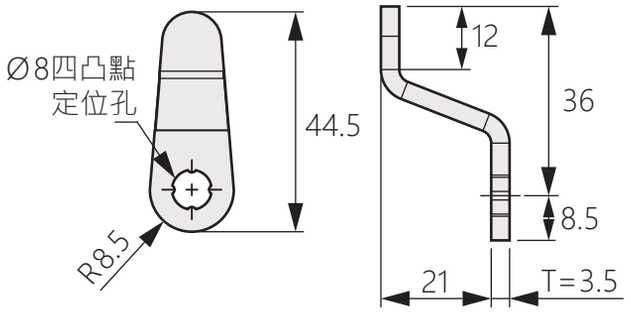

[TH-44]

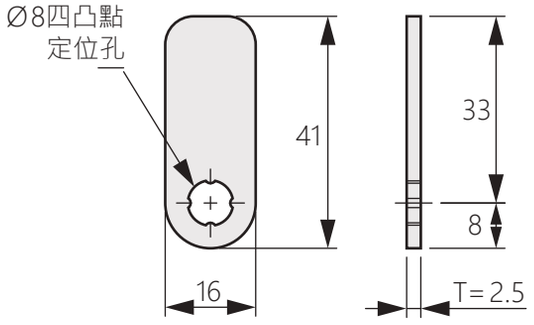

[TH-17]

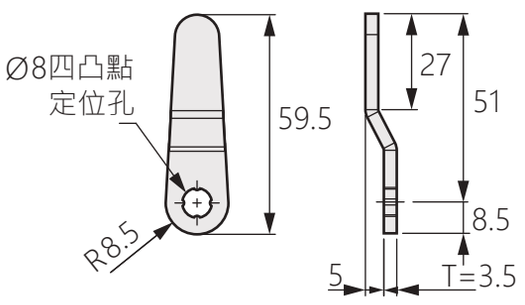

[TH-18]

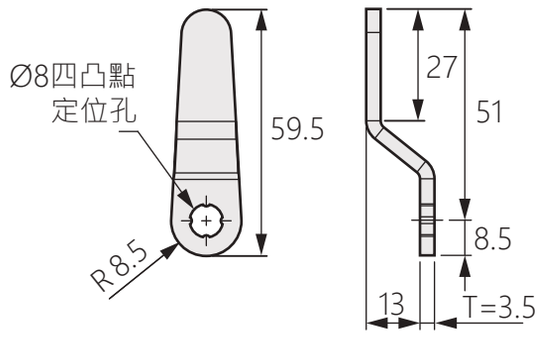

[TH-19]

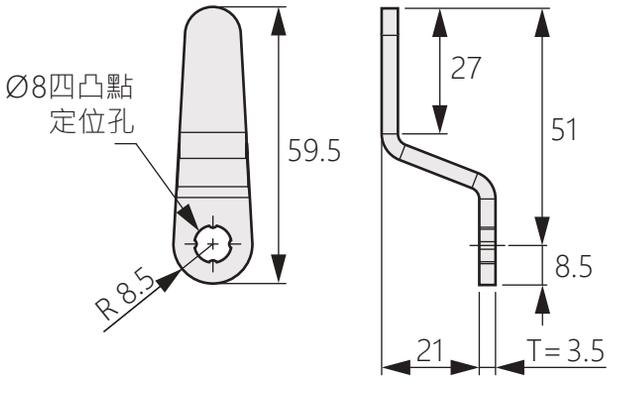

[TH-45]

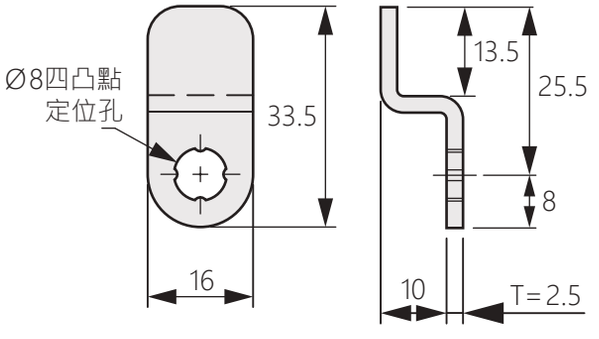

控制櫃門鎖 TM-027

Control cabinet door lock



商品介紹:
- ■具有伸縮迫緊功能
- ■按壓彈性回饋良好
- ■適用於門板厚度1.5-25mm
- ■材質:鋅合金
- ■表面處理:無光黑
- ■用途:控制箱、電力箱、機箱機櫃
- ■備註:調整鎖片，可適合不同門板厚度

Product description:
- ■With compression urgency function
- ■Good elastic feedback
- ■Suitable for door thickness 1.5-25mm
- ■Material: Zinc alloy
- ■Surface treatment: Matte black
- ■Uses: Control box, power box, chassis cabinet
- ■Note: Adjust the lock plate to fit different door thickness.

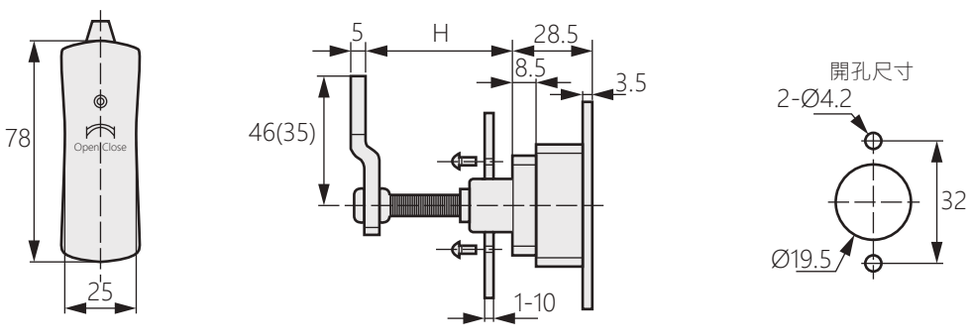

平面型門鎖 TM-730

Flat Latch



商品介紹:
- ■ 左右開門通用:透過變更門擋片的方向，即可實現左右開門使用
- ■ 表面處理:銀色塗裝
- ■ 適用板厚:1~2 mm
- ■ 材質:鋅合金
- ■ 用途:配分電盤、控制盤(箱)、機械設備

Product description:
- ■ For both left-hand and right-hand use:The left-hand and right-hand use can be changed by reversing the cam.
- ■ Surface treatment: Silver Powder Coated
- ■ Panel Thickness: 1~2 mm
- ■ Material: Zinc Alloy (ZDC)
- ■ Uses: Communication cubicle, Control Panel, Cabinet Door,Machinery Equipment.

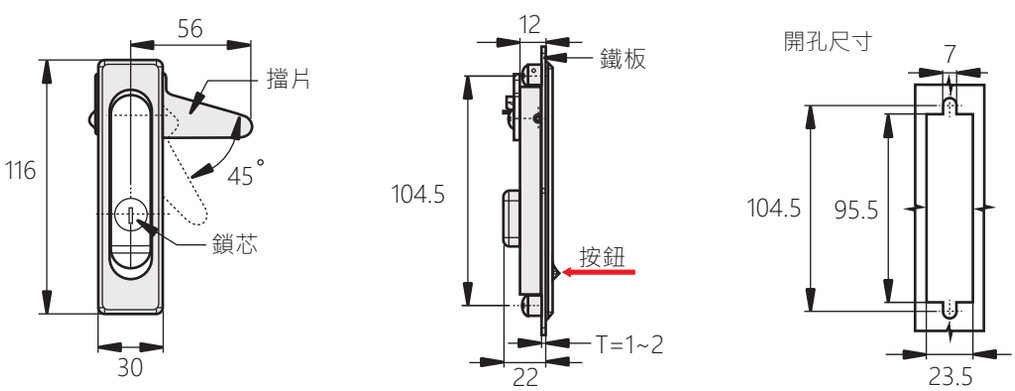

防水面板鎖

Waterproof panel lock

TM-032



商品介紹:

- ■具有壓縮迫緊功能，防水、防塵功能
- ■兩種長度和顏色規格，帶鑰匙與無鑰匙
- ■有效防止設備與門之間產生異響
- ■材質:鋅合金,冷軋板
- ■表面處理:黑色烤漆
- ■操作:旋轉鑰匙、滑動按鈕開啟
- ■用途:控制箱、電力箱、機箱機櫃

Product description:

- ■With compression compression function, waterproof and dustproof function
- ■Available in two lengths and colors, keyed and keyless
- ■Effectively prevent abnormal noise between the equipment and the door
- ■Material: Zinc alloy, Cold rolled sheet
- ■Surface treatment: Black paint
- ■Operation: Turn key, slide button to open.
- ■Uses: Control box, power box, chassis cabinet.

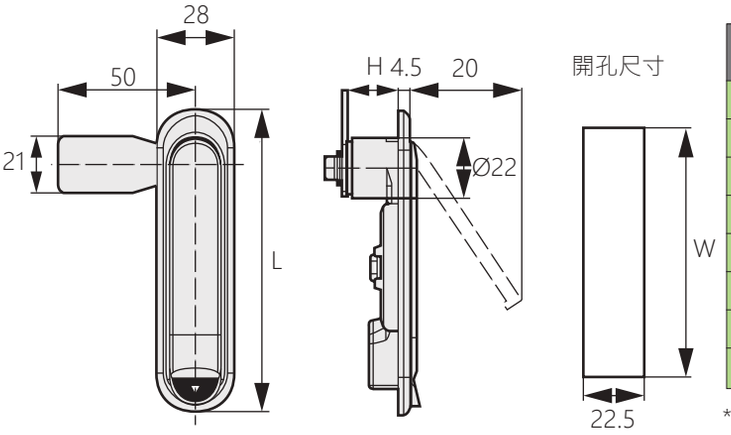

商品型號	顏色	樣式	L	W
TM-032-1-1B	黑色	有鑰匙	110	91.5
TM-032-1-2B		無鑰匙		
TM-032-1-1W	銀色	有鑰匙		
TM-032-1-2W		無鑰匙		
TM-032-2-1B	黑色	有鑰匙	81	62.5
TM-032-2-2B		無鑰匙		
TM-032-2-1W	銀色	有鑰匙		
TM-032-2-2W		無鑰匙		

*此系列門鎖分長型TM-032-1和短型TM-032-2兩個系列,
選型時可根據您箱體大小等選擇適合的系列

操作示例

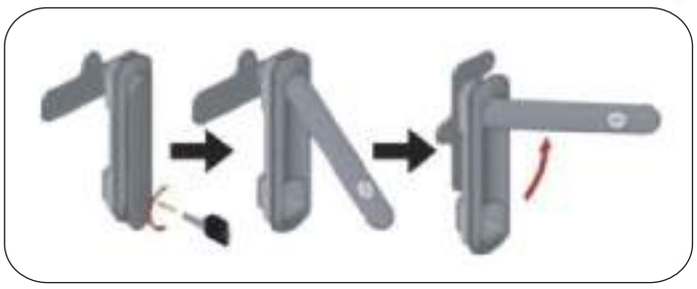



安裝圖

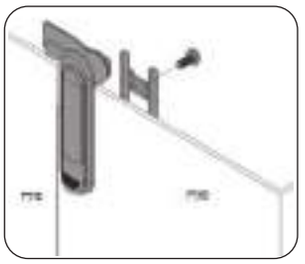

鎖片型號	H
TH-088	17.2
TH-488	21.9
TH-788	23.7
TH-1488	31

操作

1. 開鎖:將鑰匙順時針旋轉90度,開鎖
2. 往下拉動手柄頂端的鎖芯滑塊,彈起手柄
3. 開門:獎手柄逆時針旋轉90度,開門
4. 關門:將手柄復位到原位置,然後上鎖
5. 註:圖中操作示例圖只做操作示範,不一定是本產品圖片

Operation:

1. Unlocking:Clockwise rotating the key in 90 degree to open
2. Pulling the cylinder sliding block of handle top and bound it
3. Opening:Contra rotate the handle in 90 degree to open
4. Closing:Reset the handle to original position and then locked
5. Notes:Example of operation, the picture not necessarily this product’s picture

按壓式旋轉控制箱鎖 TM-052

Push-type rotary control box lock



商品介紹:

- 具有伸縮迫緊功能
- 調整鎖片可適合不同門板厚度
- 材質:鋅合金、冷軋板
- 用途:機箱機櫃、配電箱、電櫃

Product description:

- With telescopic pressing function
- Adjust the lock piece to suit different door thickness
- Material: Zinc alloy, Cold rolled sheet
- Uses: Chassis cabinets, distribution boxes, electrical cabinets.

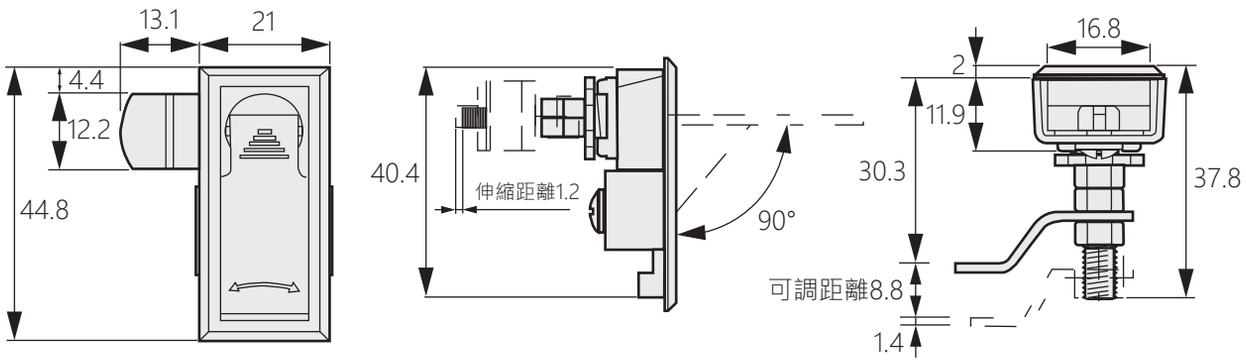

開孔尺寸

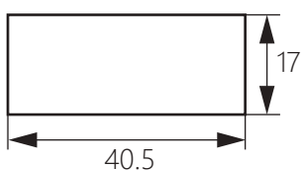

商品型號	表面顏色
TM-052-1	黑亞光
TM-052-2	鍍亮鉻

平面回壓式門鎖 TM-055

Panel lock



商品介紹:

- 具有伸縮迫緊功能
- 材質:不鏽鋼304
- 表面處理:拉絲拋光
- 用途:機箱機櫃、配電箱、電櫃、船舶
- 備註:鎖片軸心孔設計四點定位，可快速方便組裝完全不鬆動

Product description:

- With telescopic pressing function
- Material: Stainless steel 304
- Surface treatment: Brushed and polished
- Uses: Chassis cabinets, distribution boxes, electrical cabinets, ships.
- Note: The four-point positioning of the central hole of the lock plate can be quickly and easily assembled without loosening.

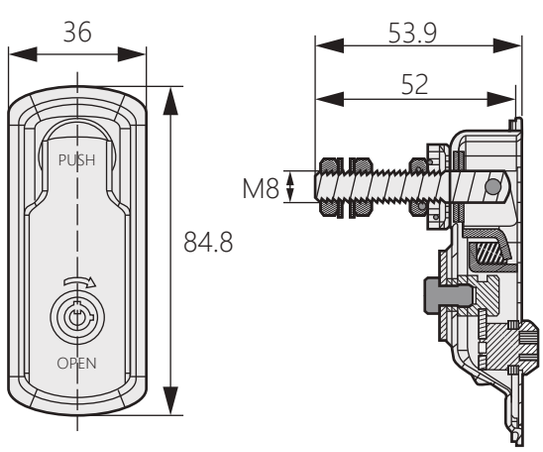

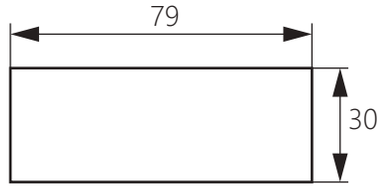

開孔尺寸

商品型號	樣式
TM-055-1	有鎖
TM-055-2	無鎖

自動化設備鎖

Automation equipment lock

TM-053



商品介紹:

- 具有伸縮迫緊功能
- 調整鎖片可適合不同門板厚度
- 鎖片可正反裝配，以適應不同的板厚
- 材質:鋅合金、冷軋板
- 用途:機箱機櫃、配電箱、電櫃

Product description:

- With telescopic pressing function
- Adjust the lock piece to suit different door thickness
- Locking plate can be assembled front and back to adapt to different board thickness.
- Material: Zinc alloy, Cold rolled sheet
- Uses: Chassis cabinets, distribution boxes, electrical cabinets.

[TM-053-1]

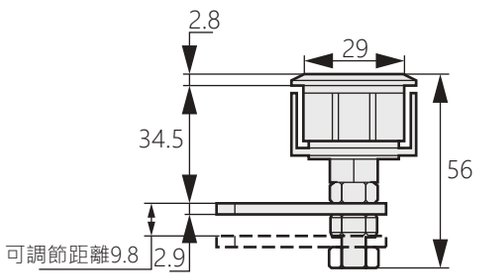

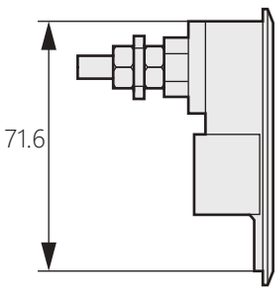

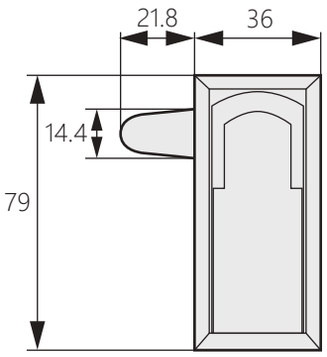

開孔尺寸

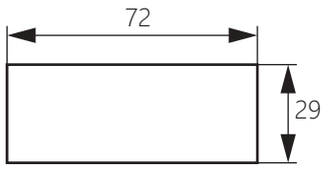

商品型號	表面顏色
TM-053-1	鍍亮鉻
TM-053-2	黑亞光

[TM-053-2]

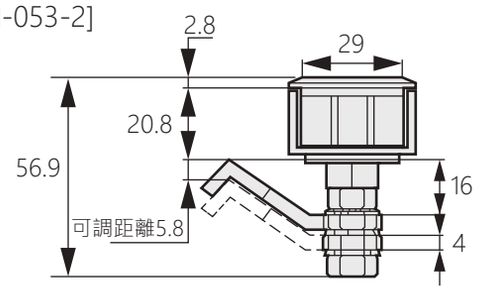

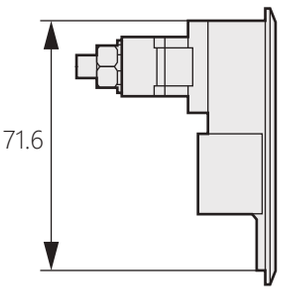

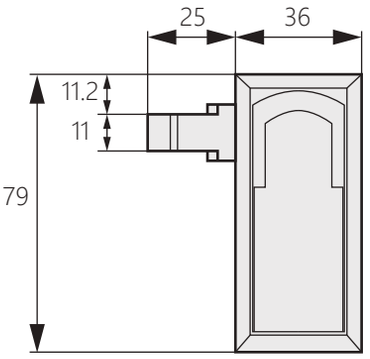

開孔尺寸

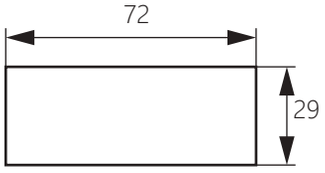

鋅合金三點鎖

TM-082

Zinc alloy three point lock



商品介紹:

- 操作:把手90度旋轉實現打開及鎖定，調換定位鍵方向實現左右開啟；止口高度可調節，也可帶掛鎖
- 材質:鋅合金
- 表面處理:黑色噴漆
- 用途:機箱機櫃、配電箱、電力箱
- 備註:把手有90度旋轉行程

Product description:

- Operation: Turn the handle 90 degrees to open and lock, and change the direction of the positioning key to achieve left and right opening; the height of the stop can be adjusted, and a padlock can also be used.
- Material: Zinc alloy
- Surface treatment: Black spray paint
- Uses: Chassis cabinet, power distribution box, power box.
- Note: The handle has a 90-degree rotation stroke.

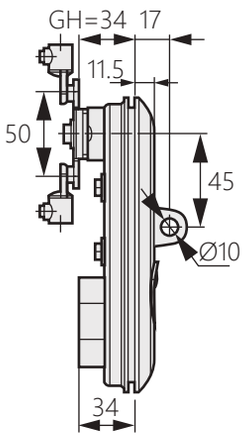

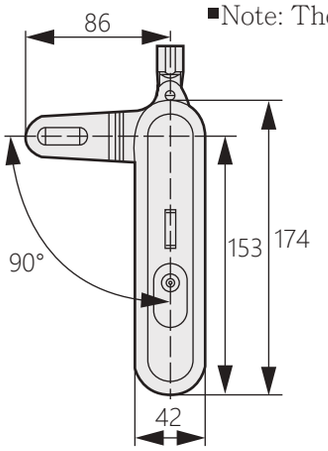

開孔尺寸

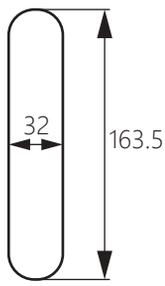

分解圖示



電櫃鎖

TM-241

Panel Lock



商品介紹:

- 長方形鎖體,按鈕和鑰匙開啟
- 材質:鋅合金
- 表面處理:鍍亮鉻
- 用途:機箱機櫃、電櫃、電箱
- 備註:開啟鑰匙後按壓按鈕即開啟

Product description:

- Rectangular lock body, button and key to open
- Material: Zinc alloy
- Surface treatment: Bright chrome plating
- Uses: Chassis cabinet, electric cabinet, electric box.
- Note: Press the button after opening the key to open.

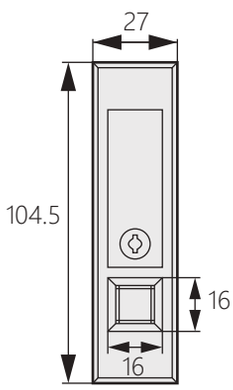

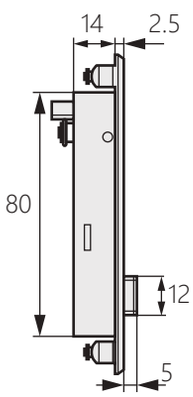

開孔尺寸

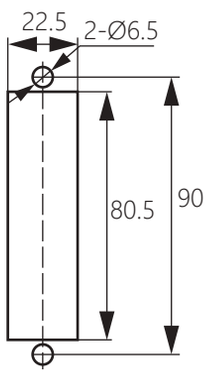

按壓式旋轉鎖 TM-083B

Push-type rotary lock



商品介紹:
- ■單點鎖定，配鑰匙
- ■鎖片折彎處理，以適用更大門框厚度
- ■材質:鋅合金
- ■表面處理:黑色噴塗
- ■用途:機箱機櫃、配電箱、電力箱
- ■備註:把手有90度旋轉行程

Product description:
- ■Single point lock with key
- ■Bending clips for larger door frame thickness.
- ■Material: Zinc alloy
- ■Surface treatment: Black spray
- ■Uses: Chassis cabinet, power distribution box, power box.
- ■Note: The handle has a 90-degree rotation stroke.

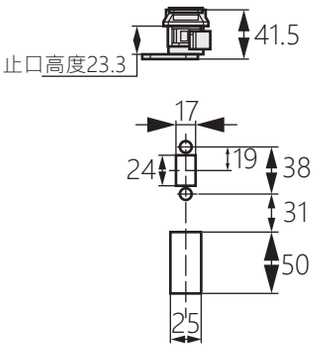

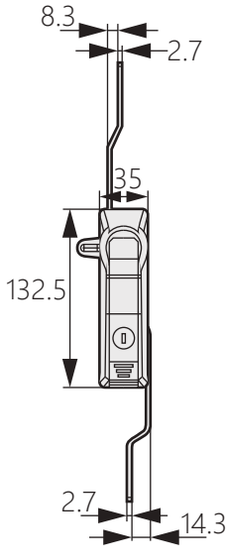

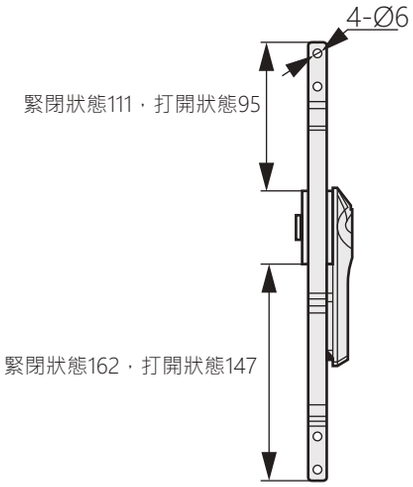

按壓式旋轉鎖 TM-083W

Push-type rotary lock



商品介紹:
- ■單點鎖定，配鑰匙
- ■操作:鑰匙開啟手柄自動彈開，旋轉手柄即開門
- ■材質:鋅合金
- ■表面處理:銀色噴塗
- ■用途:機箱機櫃、配電箱、電力箱
- ■備註:把手有90度旋轉行程

Product description:
- ■Single point lock with key
- ■Operation: The key opening handle automatically pops open, and the rotating handle opens the door.
- ■Material: Zinc alloy
- ■Surface treatment: Silver spray
- ■Uses: Chassis cabinet, power distribution box, power box.
- ■Note: The handle has a 90-degree rotation stroke.

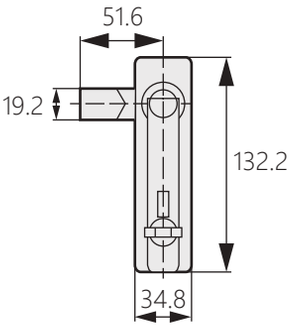

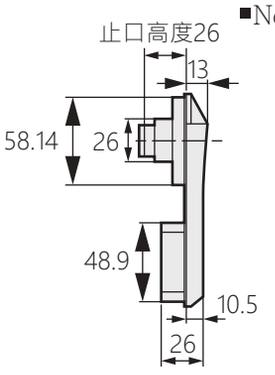

開孔尺寸

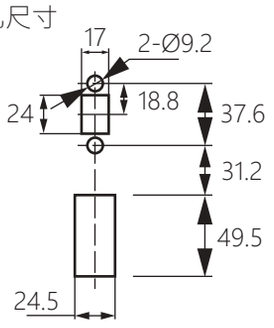

槓桿型壓縮式門鎖 TM-109

Lever type compression door lock



商品介紹:

- 微調螺母可調節門的迫緊程度
- 可實現快速拆裝的功能，方便快捷
- 通過單點實現鎖閉
- 可適應1-5mm厚度的門板
- 材質:鋅合金
- 表面處理:無光黑
- 用途:自動售貨機、旅遊大巴車、自動化設備

Product description:

- Adjust the door’s compression degree by fine-tuning the nut.
- Easy to quickly and conveniently disassemble
- By single latching to realize locking
- Suitable door panle thickness range: 1mm to 5mm
- Material: Zinc Alloy (ZDC)
- Surface treatment: Black painted
- Uses: Vending machine, tourist coach, automation equipment.

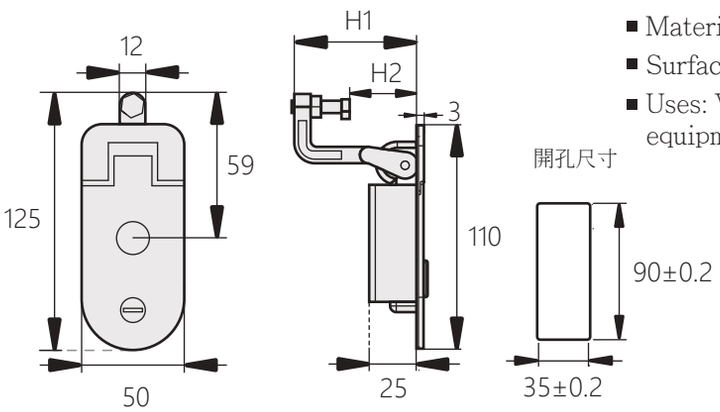

商品型號		H1	H2
有鎖	無鎖		
TM-109-1-1	TM-109-2-1	21	0-15
TM-109-1-2	TM-109-2-2	52	30-45
TM-109-1-3	TM-109-2-3	67	45-60

工具箱櫃鎖 TM-066

Toolbox cabinet lock



商品介紹:

- 微調螺母可調節門的迫緊程度
- 材質:鋅合金
- 表面處理:鍍沙鉻
- 用途:機箱機櫃、配電箱、電櫃、工具箱櫃
- 備註:該鎖具有良好迫緊功能，開、閉回饋良好

Product description:

- Fine-tuning nut adjusts the urgency of the door
- Material: Zinc alloy
- Surface treatment: Chrome-plated sand
- Uses: Chassis cabinet, power distribution box, electric cabinet, tool box cabinet.
- Note: The lock has a good pressing function, and the opening and closing feedback is good.

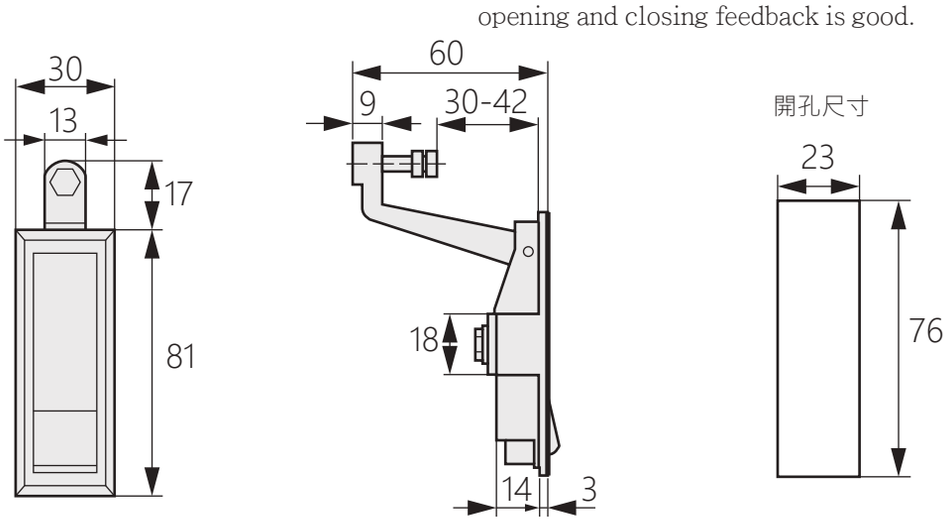

戶外機櫃鎖

TM-224

Outdoor cabinet lock



商品介紹:
- ■調換鎖片位置實現左右開門兼用
- ■預留天地鎖改裝功能
- ■材質:鋅合金、PA-6
- ■表面處理:黑色噴砂、塑膠黑色
- ■用途:機箱機櫃、配電箱、控制櫃

Product description:
- ■Reversing the position of the lock plate for both left and right door opening.
- ■Reserve world lock modification function.
- ■Material: Zinc alloy, PA-6
- ■Surface treatment: Black sandblasted , plastic black
- ■Uses: Chassis cabinet, power distribution box, control cabinet.

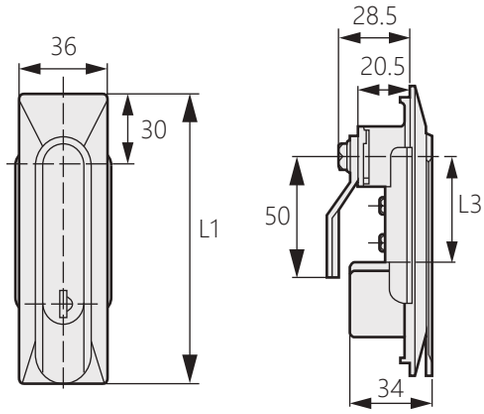

開孔尺寸

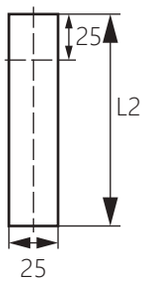

商品型號	L1	L2	L3
TM-224-1	160	150	84.5
TM-224-2	120	110	44

旋轉手柄鎖

TM-118

Rotary handle lock



商品介紹:
- ■把手旋轉90度開啟
- ■調換鎖片位置實現左右開門兼用
- ■材質:鋅合金
- ■表面處理:珍珠鉻
- ■用途:電力箱、控制箱、自動化設備
- ■備註:適合門板厚度為1-6mm

Product description:
- ■Turn the handle 90 degrees to open
- ■Reversing the position of the lock plate for both left and right door opening.
- ■Material: Zinc Alloy
- ■Surface treatment: Pearl chrome
- ■Uses: Suitable for door panel thickness of 1-6mm.

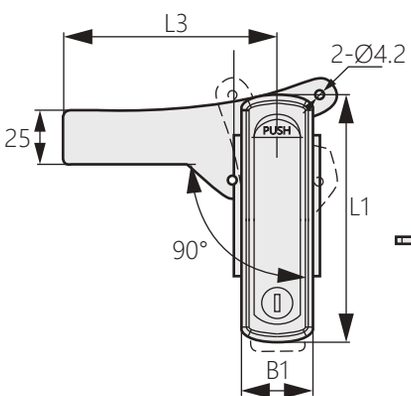

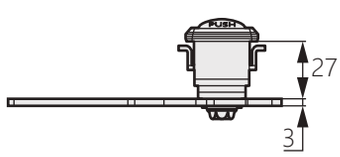

開孔尺寸

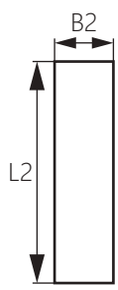

商品型號	L1	L2	L3	B1	B2
TM-118-1	155	141	140	38	30
TM-118-2	115	103	100	34	27

電櫃鎖

Panel Lock

TM-240



商品介紹:

- 按壓按鈕，鎖片自動旋轉開門
- 帶鎖芯和不帶鎖芯兩種型號可選
- 左右兼用型
- 材質:鋅合金(ZDC)
- 表面處理:鍍亮鉻
- 用途:機箱機櫃、配電箱、電錶箱櫃
- 備註:按壓按鈕，鎖片自動旋轉開啟

Product description:

- Press the button, the lock piece automatically rotates to open the door
- Optional with and without lock cylinder
- Left and right
- Material: Zinc Alloy (ZDC)
- Surface treatment: Bright chrome plating
- Uses: Chassis cabinet, distribution box, meter box.
- Note: Pressing button auto rotate the pawl to open.

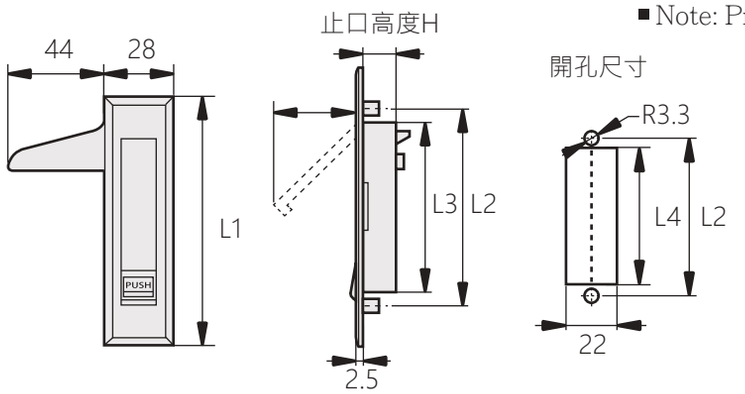

商品型號	鑰匙	H	L1	L2	L3	L4
TM-240-1-1	有鑰匙	12	84	71	61.5	63
TM-240-2-1	無鑰匙					
TM-240-1-2	有鑰匙		113.8	99	89.2	90
TM-240-2-2	無鑰匙					

提轉型壓縮式門鎖

Transforming compression type door locks

TM-7322



商品介紹:

- 按鍵下推後手柄彈起，擋片解除壓縮，旋轉手柄開啓箱門
- 材質:鋅合金 (ZDC)
- 表面處理:黑色塗裝、銀色塗裝
- 用途:機箱、電控箱、箱體門板、配電盤、機械設備

Product description:

- Pushed down the button then the handle pops up, and the pawl is released from compression. Turn the handle to open the door.
- Material: Zinc alloy (ZDC)
- Surface treatment: Black powder coated, sliver powder coated
- Uses: Communication equipment, control panel, cabinet door, machinery equipment.

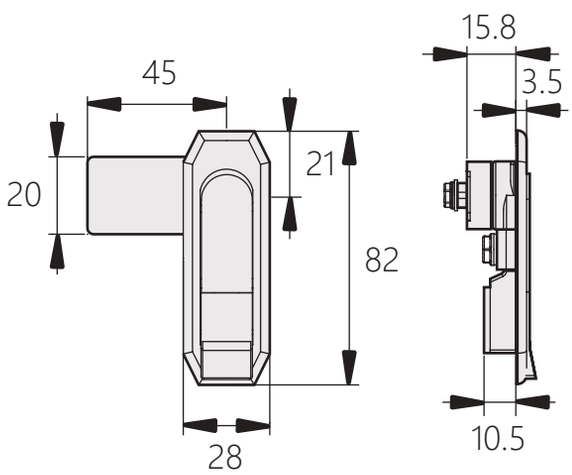

開孔尺寸

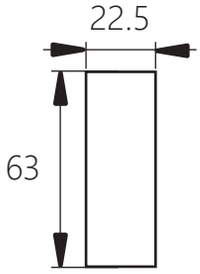

商品型號		表面顏色
有鎖	無鎖	
	TM-7322-2B	黑色塗裝
TM-7322-1W	TM-7322-2W	銀色塗裝

平面鎖、天地鎖

Rotary handle lock, world lock

TM-242

CAD



商品介紹:

- 預留天地鎖改裝功能
- 材質:PA-6塑膠
- 表面處理:塑膠黑色
- 用途:機箱機櫃、配電箱、電力箱
- 備註:把手有90度旋轉行程

Product description:

- Reserve world lock modification function
- Material: PA-6 plastic
- Surface treatment: Plastic black
- Uses: Chassis cabinet, power distribution box, power box.
- Note: The handle has a 90-degree rotation stroke.

〔TM-242-1〕

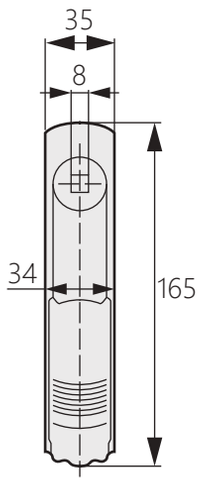

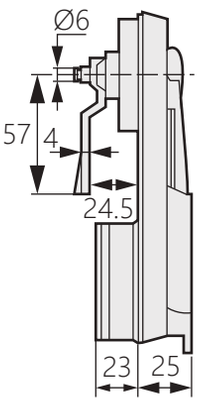

開孔尺寸

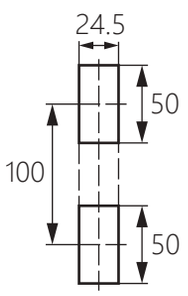

〔TM-242-2〕

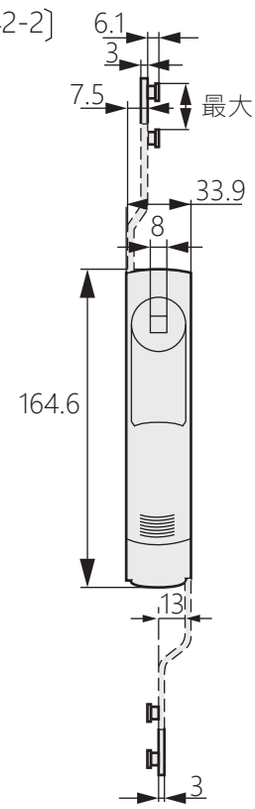

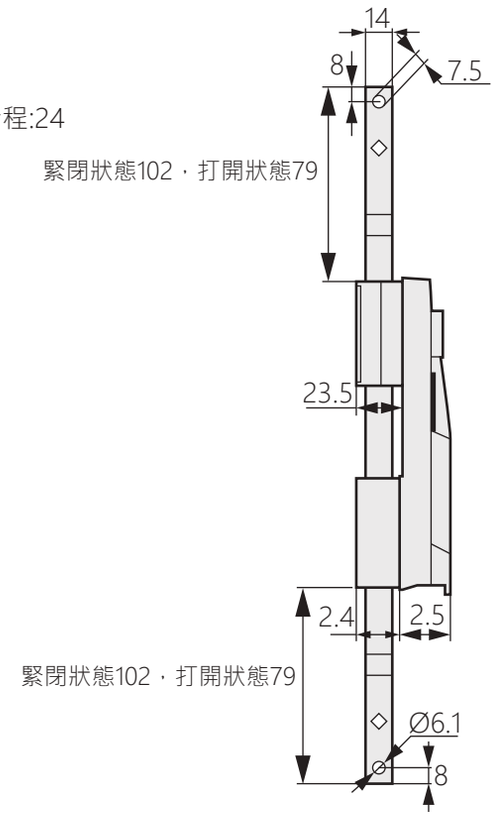

開孔尺寸

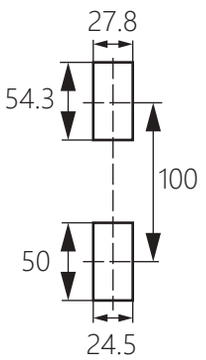

商品型號	樣式
TM-242-1	旋轉手柄鎖
TM-242-2	天地鎖

槓桿型壓縮式門鎖 TM-708

Sealed lever latch



商品介紹:

- 結構功能:單點平面門鎖;可配調節止口高度;彈起把手即可打開櫃門
- 材質:鋅合金鎖體、鍍鋅鋼安裝板、調節螺桿(帶橡膠帽蓋)
- 表面處理:鍍鎳、納米、黑色

Product description:

- Structure function: Single-point plane door lock; can be adjusted to adjust the height of the mouth; pop up the handle to open the door.
- Material: Zinc alloy lock body, galvanized steel mounting plate, adjusting screw (with rubber cap).
- Surface treatment: Nickel plating, nano, black.

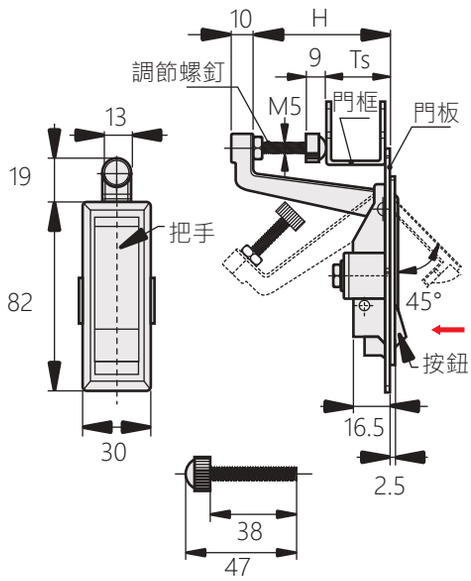

備註:默認調節螺桿
其他螺規格請訂單註明

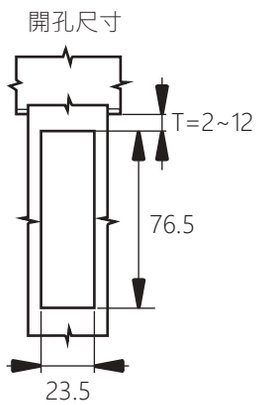

商品型號	表面處理	H	TS 門板厚度
TM-708-1S	鍍鎳	46	9-37
TM-708-1B	黑色		
TM-708-1W	納米		
TM-708-2S	鍍鎳	60	23-51
TM-708-2B	黑色		
TM-708-2W	納米		
TM-708-3S	鍍鎳	24	0-15
TM-708-3B	黑色		
TM-708-3W	納米		

槓桿型壓縮式門鎖 TM-719

Sealed lever latch



商品介紹:

- 微調螺母可調節門的迫緊程度
- 左右開門兼用
- 材質:鋅合金(ZDC)
- 表面處理:鍍鉻、黑色塗裝
- 用途:巴士、客車和房車、機櫃、暖通空調工業機械設備

Product description:

- Fine-tuning nut can adjust the tightness of the door.
- Open the door and use both left and right.
- Material: Zinc alloy (ZDC)
- The locking piece can be assembled back and forth to suit different thicknesses.
- Uses: Bus, bus and RV, cabinet, HVAC Industrial machinery and equipment.

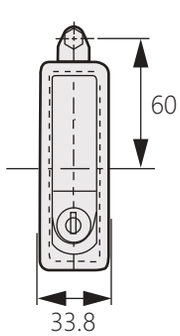

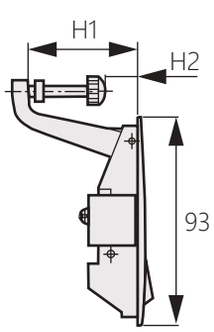

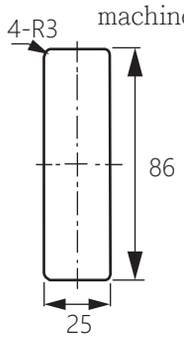

商品型號		規格	H1	H2
黑色塗裝	鍍鉻			
TM-719-1B	TM-719-1W	有鎖	48.5	14-37
TM-719-2B	TM-719-2W	無鎖	27.5	0-16

平面型把手

Flat handle

TM-717



商品介紹:

- 左右開門通用:透過變更門擋片以及方向限位擋板的方向，即可實現左右開門使用
- 材質:鋅合金
- 表面處理:黑色塗裝
- 用途:配分電盤、控制盤(箱)、機械設備

Product description:

- For both left-hand and right-hand use:The left-hand and right-hand use can be changed by reversing the cam and stopper plate.
- Material: Zinc Alloy
- Surface treatment: Black Powder Coated
- Uses: Communication cubicle, Control Panel, Cabinet Door,Machinery Equipment.

[TM-717-1]

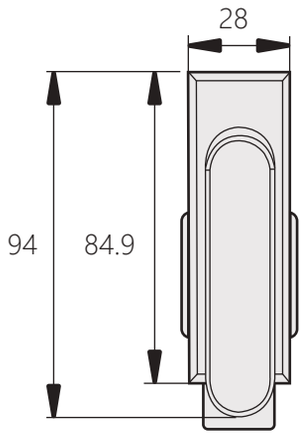

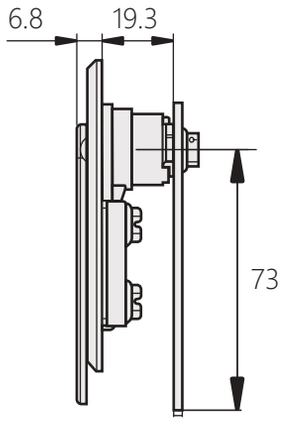

開孔尺寸

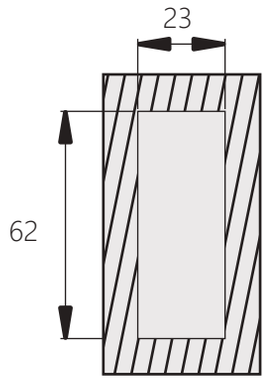

[TM-717-2]

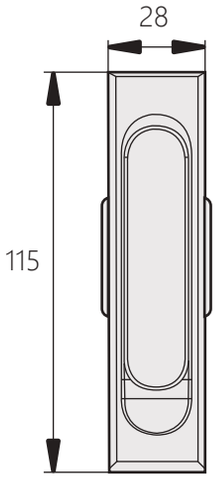

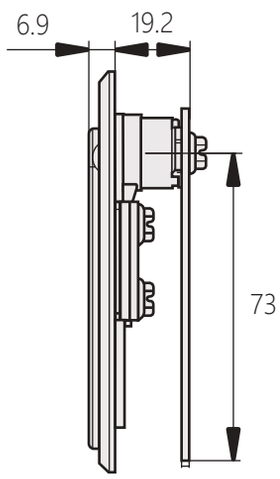

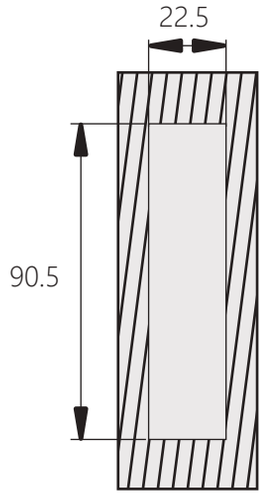

槓桿型壓縮式門鎖

Lever type compression door lock

TM-718



商品介紹:

- 壓縮作用將門鎖緊推而沒有磨擦或磨損門擋或門框
  大範圍間距-可簡易的調整間距以適應間距變化
  埋入式安裝實現最小突出高度，使表面更平整
  帶鎖式產品透過提供鑰匙鎖定或開啟，以提升安全性
- 材質:鋅合金
- 表面處理:黑色塗裝
- 用途:汽車、卡車、產品、施工設備、農業機具、
  食品機械、空調系統、工業用機具、工業機械、機床

Product description:

- Compressive action pulls door tight, without rubbing action and without wear on latch contact point or frame.
  A broad grip range provides for easy grip adjustment to accommodate grip changes over time. Available in matte black powder coat or textured chrome finish. Security options include variety of tool and key access styles.
- Material: Zinc Alloy (ZDC)
- Surface treatment: Black Powder Coated
- Automotive/Trucks, Appliances, Construction Equipment, Off-Highway Vehicles, Farm Equipment, Food Equipment, HVAC,Industrial Enclosures, Industrial Machinery, Machine Tools and Metal Cutting.

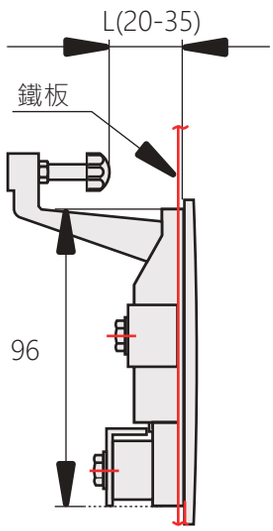

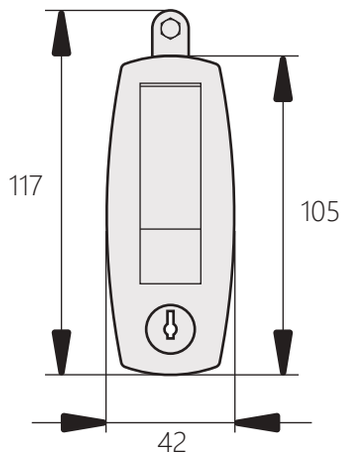

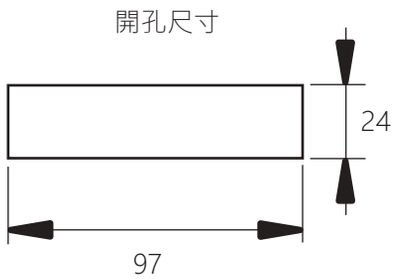

關閉狀態



手柄彈起



開啟門板



彈簧快拆式門鎖

TM-725

Spring quick release door lock



商品介紹:

- 手指按壓三角箭頭方向，止動擋塊連動內縮6m/m
- 推動開啟，推入鎖定，塑料
- 材質: ABS
- 適用板厚: 1~2m/m
- 最大靜載荷: 200N

Product description:

- Finger presses the direction of the triangle arrow, the stop block interlocks with the internal contraction 6m/m.
- Push open, push in lock, plastic
- Material: ABS
- Applicable plate thickness: 1~2m/m
- Maximum static load: 200N

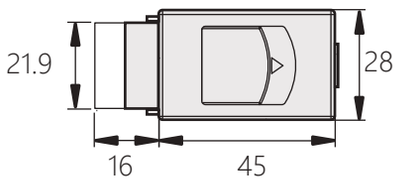

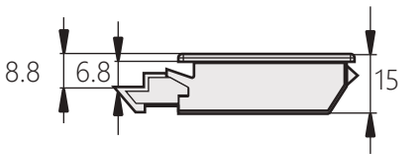

開孔尺寸

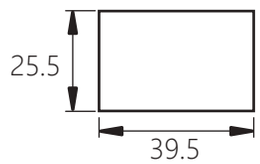

商品型號	規格
TM-725-1	附鎖
TM-725-2	無鎖

安裝示意圖

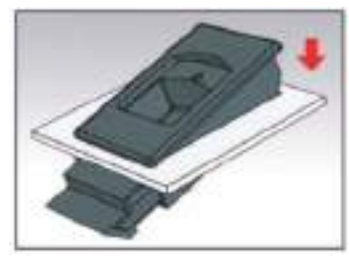

塑膠拉手

TM-1025

Plastic handle



商品介紹:

- 材質:塑膠
- 表面處理:塑膠黑色
- 用途:烤箱、試驗箱、自動化設備等

Product description:

- Material: Plastic
- Surface treatment: Plastic black
- Uses: Oven, test chamber, automation equipment, etc.

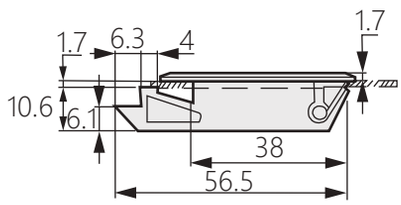

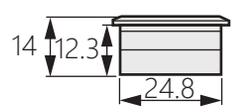

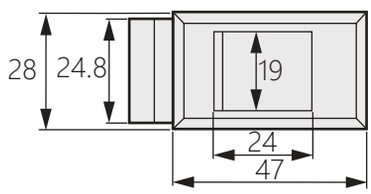

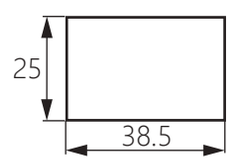

開孔尺寸

提轉型壓鎖式門扣

Lift-And-Turn Compression Latch

TM-726



商品介紹:

- 雙重功能 - 壓縮式門鎖和門把手 - 在一個組件。容易安裝、操作。只要拉起手柄就能釋放壓 ，轉動就將門擋片從門框中旋轉出來。多種門擋片選項和可調整的門擋片定位一門鎖型號可適應多種多種間距尺寸。
- 材質:鋅合金(ZDC)
- 表面處理:黑色塗裝、亮鉻
- 用途:通信用機箱、電控箱、箱體門板、配電盤、機械設備

Product description:

- Dual function - compression latch and door handle - in one assembly. Easy to install and easy to operate. Simply lift the handle to release the compression, and turn it to rotate the cam out from behind the frame. Multiple cam options and adjustable cam positioning enable a single latch model to accommodate a wide variety of grip dimensions.
- Material: Zinc Alloy (ZDC)
- Surface treatment: Black coating, bright chrome
- Uses: Communication chassis, electric control box, cabinet door panel, switchboard, mechanical equipment.

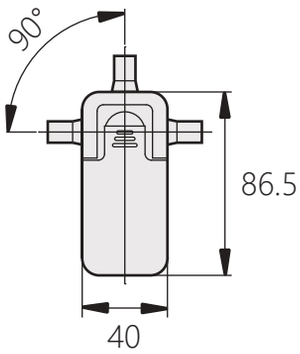

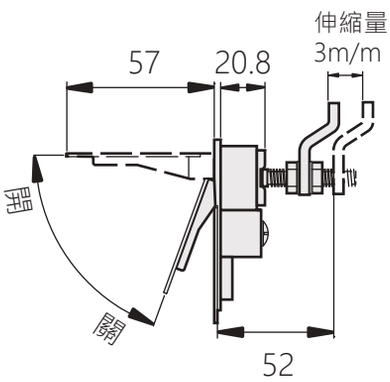

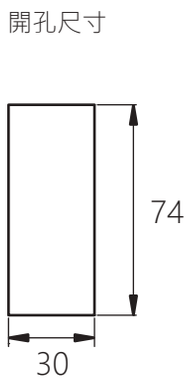

商品型號	表面處理
TM-726-1	黑色塗裝
TM-726-2	亮鉻

[TH-005]

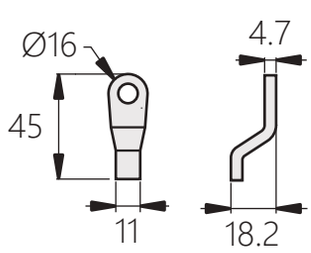

商品型號	調節深度
TH-005(內)	21-27
TH-005(外)	49-55

[TH-007]

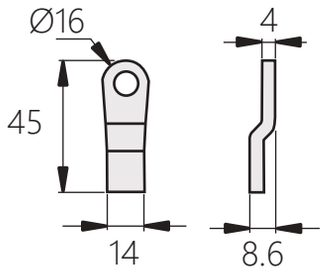

商品型號	調節深度
TH-007(內)	29-36
TH-007(外)	40-46

[TH-008]

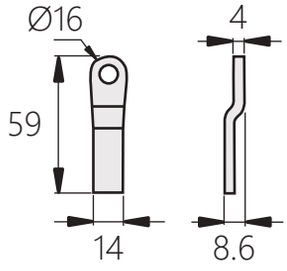

商品型號	調節深度
TH-008(內)	29-36
TH-008(外)	40-46

防水迫緊門扣

Rotation Type Compression Latch

TM-727



商品介紹:

- 雙重功能- 壓縮式門鎖和門把手-在一個組件。容易安裝、操作。只要拉起手柄就能釋放壓縮，轉動 就將門擋片從門框中旋轉出來。 多種門擋片選項和可調整的門擋片定位一門鎖型號可適應多種多種間距尺寸
- 材質:鋅合金 (ZDC)
- 表面處理:黑色塗裝、鍍鉻
- 用途:通信用機箱、電控箱、箱體門板、配電盤、機械設備

Product description:

- Dual function - compression latch and door handle - in one assembly. Easy to install and easy to operate. Simply lift the handle to release the compression, and turn it to rotate the cam out fr om behind the frame. Multiple cam options and adjustable cam positioning enable a single latch model to accommodate a wide variety of grip dimensions.
- Material: Zinc Alloy (ZDC)
- Surface treatment: Black Powder Coated 、Electroplated With Chrome
- Uses: Communication Equipment, Control Panel, Cabinet Door, Machinery Equipment.

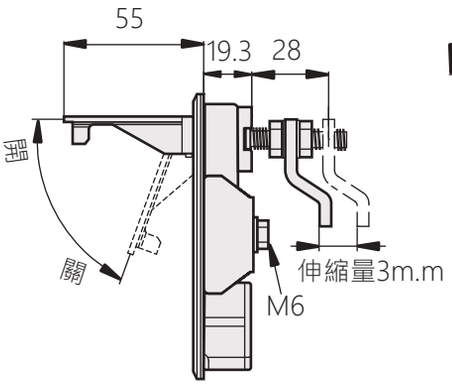

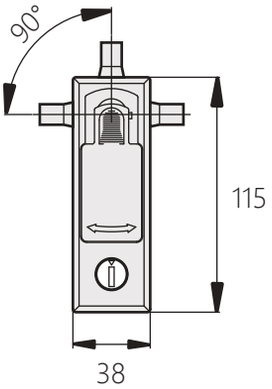

開孔尺寸

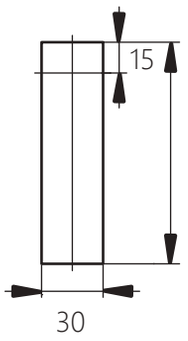

商品型號	表面顏色
TM-727-1	黑色塗裝
TM-727-2	鍍鉻

[TH-005]

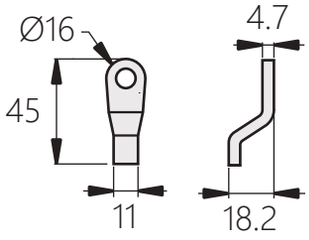

商品型號	調節深度
TH-005(內)	23.5-26
TH-005(外)	48-53

[TH-007]

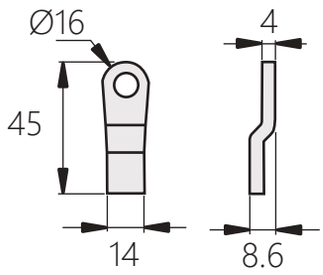

商品型號	調節深度
TH-007(內)	30-35
TH-007(外)	39.5-46

[TH-008]

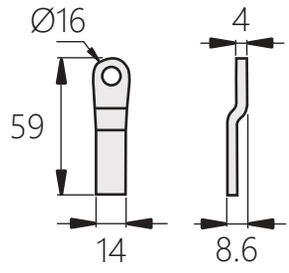

商品型號	調節深度
TH-008(內)	30-35
TH-008(外)	39.5-46

防水迫緊門扣

Rotation Type Compression Latch

TM-731

ZDC 鋅 CAD



商品介紹:

- 雙重功能- 壓縮式門鎖和門把手-在一個組件。容易安裝、操作。只要拉起手柄就能釋放壓縮，轉動 就將門擋片從門框中旋轉出來。 多種門擋片選項和可調整的門擋片定位一門鎖型號可適應多種多種間距尺寸
- 材質:鋅合金 (ZDC)
- 表面處理:黑色塗裝、鍍鉻
- 用途:通信用機箱、電控箱、箱體門板、配電盤、機械設備

Product description:

- Dual function - compression latch and door handle - in one assembly. Easy to install and easy to operate. Simply lift the handle to release the compression, and turn it to rotate the cam out from behind the frame. Multiple cam options and adjustable cam positioning enable a single latch model to accommodate a wide variety of grip dimensions.
- Material: Zinc Alloy (ZDC)
- Surface treatment: Black Powder Coated 、 Electroplated With Chrome.
- Uses: Communication Equipment, Control Panel, Cabinet Door, Machinery Equipment.

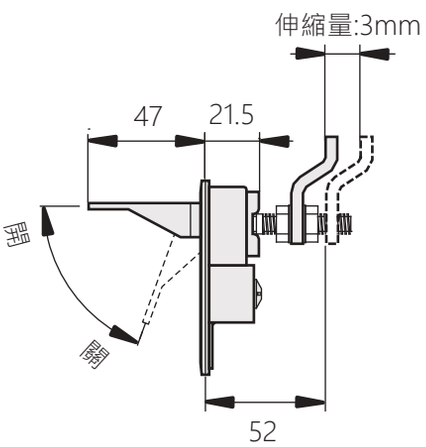

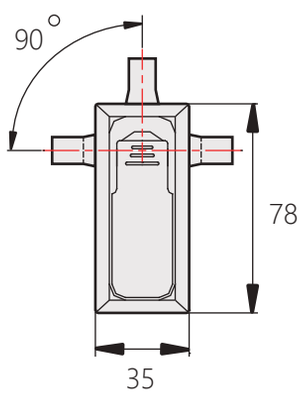

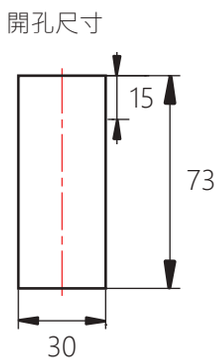

商品型號	表面顏色
TM-731-1	黑色塗裝
TM-731-2	鍍鉻

[TH-005]

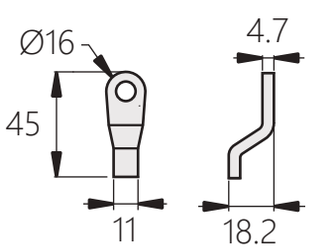

商品型號	調節深度
TH-005(內)	21-27
TH-005(外)	49-55

[TH-007]

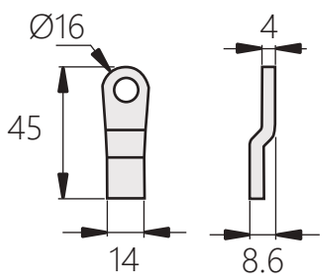

商品型號	調節深度
TH-007(內)	29-36
TH-007(外)	40-46

[TH-008]

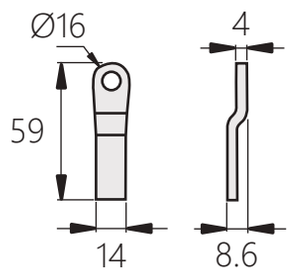

商品型號	調節深度
TH-008(內)	29-36
TH-008(外)	40-46

廚房設備平面把手

Kitchen equipment flat handle

TM-732

ZDC 鋅 CAD



商品介紹:

- 左右開門通用:透過變更門擋片方向，即可實現左右開門使用
- 材質:鋅合金 (ZDC)
- 表面處理:鍍鉻
- 適用板厚:1~2 mm
- 用途:配分電盤、控制盤(箱)、機械設備

Product description:

- For both left-hand and right-hand use: The left-hand and right-hand use can be changed by reversing the cam.
- Material: Zinc Alloy
- Surface treatment: Electroplated With Chrome
- Panel Thickness: 1~2 mm
- Uses: Communication cubicle, Control Panel, Cabinet Door,Machinery Equipment.

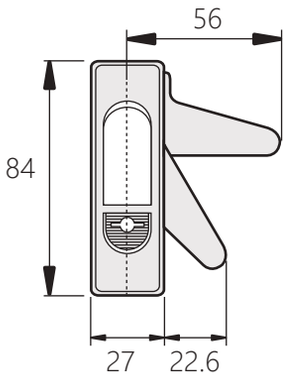

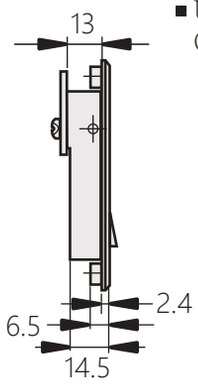

開孔尺寸

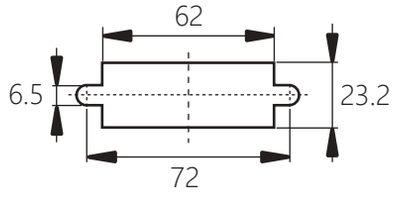

掛鎖式平面把手

Padlock flat handle

TM-860

ZDC 鋅 CAD



商品介紹:

- 防水設計:內部設置 O 型環，外部使用防水墊片
  門擋片間距可調，適合大多數箱櫃體使用
  適合單點或三點鎖定
- 材質:主體、手柄 - 鋅合金 (ZDC) ; 螺柱、門擋片 - 鐵
- 表面處理:主體、手柄 - 鍍鉻 ; 螺柱、門擋片 -鍍鋅
- 用途:機櫃、配分電盤、機械設備

Product description:

- Waterproof: Using O-ring inside and sheet packing. With convenient grip and performance, for most enclosure applications.Adaptable to single- or three-point latching.
- Material: Body, handle - zinc alloy (ZDC);
  Stud, door stop - iron
- Surface treatment: Main body, handle - chrome plating; studs, door stoppers - galvanized.
- Uses: Communication cubicle, Control Panel, Cabinet Door, Machinery Equipment.

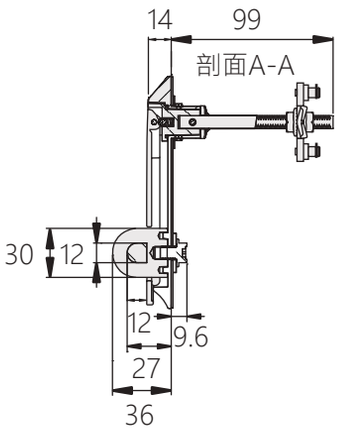

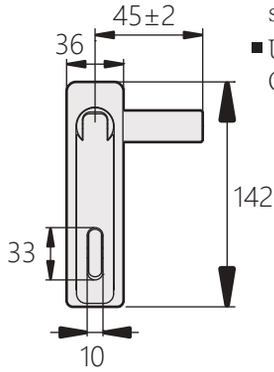

開孔尺寸

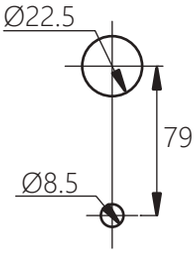

提轉型壓縮式門鎖

Lift-And Turn Compression Latch

TM-733



商品介紹:

- 只要拉起手柄就能釋放壓縮，轉動就將門擋片從門框中旋轉出來。
- 材質:鋅合金
- 表面處理:黑色塗裝&鍍鉻
- 備註:可選配擋片TH-0105.TH-0106.TH-0107.TH-0108

Product description:

- As long as the handle is pulled up to release the compression, turning the door flap away from the door The box spins out.
- Material: Zinc Alloy
- Surface treatment: Black paint & Chrome
- Note: Optional baffle TH-0105.TH-0106.TH-0107. TH-0108.

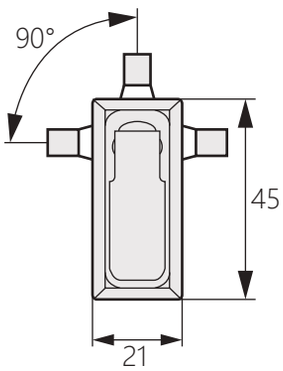

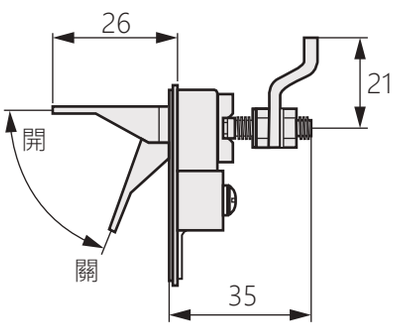

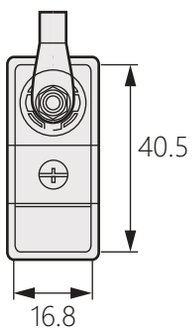

開孔尺寸

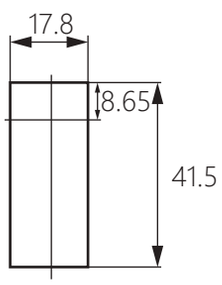

商品型號	表面處理
TM-733-1	黑色塗裝
TM-733-2	亮鉻

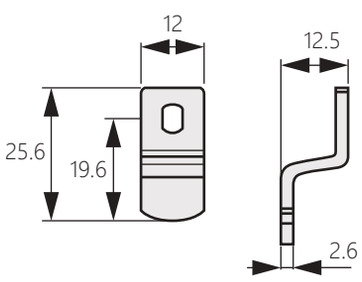

TH-0105

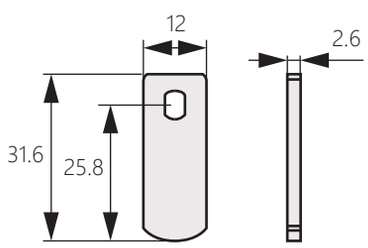

TH-0106

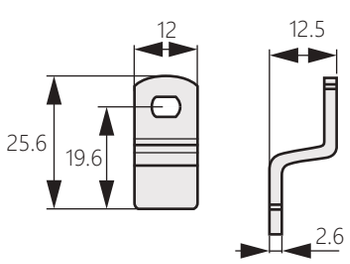

TH-0107

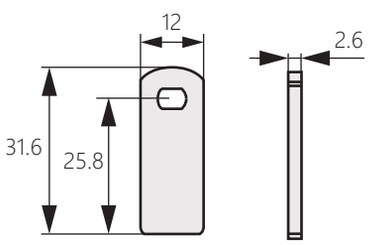

TH-0108

不鏽鋼防水型平面門鎖

TM-800

Stainless Steel Waterproof Lift-And-Turn Latch



[TM-800-1]　　[TM-800-2]

商品介紹:

- 採用強壓按鈕即可強制彈出手柄的機構
- 防水型(使用O 型圈、密封墊)
- 左右開門通用:透過變更門擋片以及方向限位擋板的方向，即可實現左右開門使用
- 材質:不鏽鋼鑄件(SUS316)
- 表面處理:鏡面拋光
- 用途:戶外配電盤、船舶、醫療設備、食品機械

Product description:

- The mechanism is incorporated that the handle is forced out by pressing the button Waterproof.
- Using O-ring and sheet packing
- For both left-hand and right-hand use: The left-hand and right-hand use can be changed by reversing the cam and stopper plate.
- Material: Cast stainless steel (SUS316)
- Surface treatment: Mirror surface buffing
- Uses: Automation equipment, medical equipment, ships.

商品型號	A	B	C	D	E	H
TM-800-1	40.5	151	140.8	30	141.5	29.6
TM-800-2	39.5	135.6	126.3	30.5	128	30.5

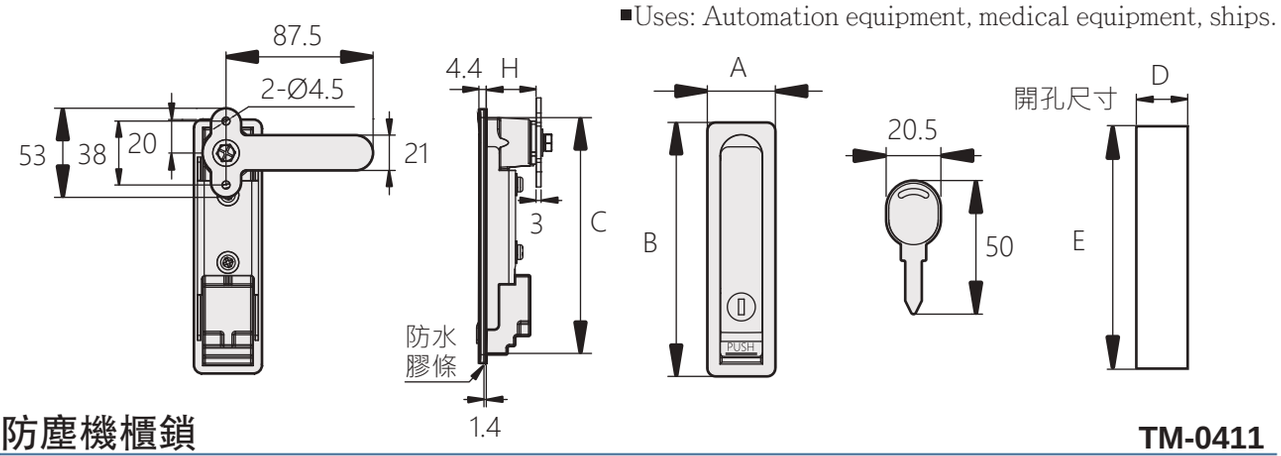

防塵機櫃鎖

TM-0411

Dustproof Cabinet Lock

商品介紹:

- 標準軸長，止口高度可調節
- 材質:鋅合金
- 表面處理:拉絲拋光
- 用途:機箱機櫃、配電箱、電櫃

Product description:

- Standard shaft length, adjustable stop height
- Material: Zinc alloy
- Surface treatment: Matt chrome
- Uses: Chassis cabinets, distribution boxes, electrical cabinets.



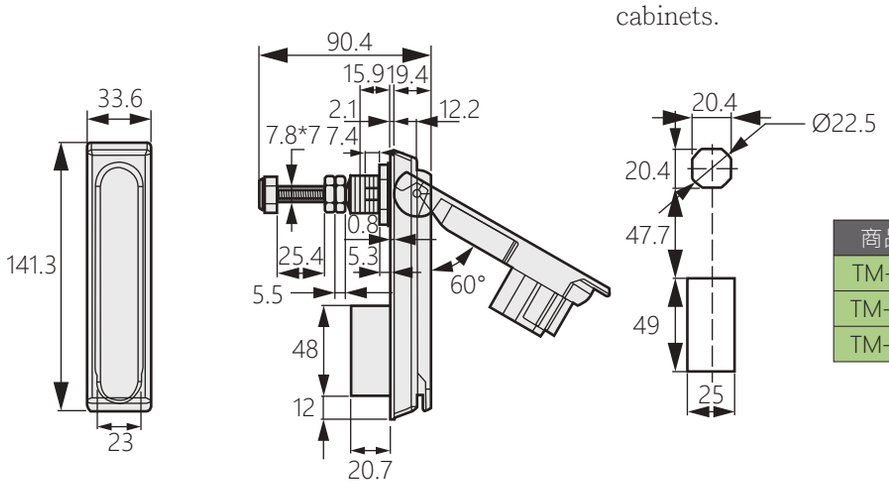

商品型號	表面處理
TM-0411-1	鍍鉻
TM-0411-2	本體黑色,手柄鍍鉻
TM-0411-3	黑色

防水平面把手

Waterproof Flat Lift And Turn Latch

TM-818



商品介紹:

- 材質:鋅合金
- 表面處理:鍍鉻
- 防水設計:內部設置O 型環，外部使用防水墊片
  左右開門通用:透過變更門擋片以及方向限位擋板的方向，即可實現左右開門使用
- 用途:機櫃、配分電盤、機械設備
- 備註:配件TH-002,TH-004與TM-818-1,-2搭配

Product description:

- Material: Zinc Alloy
- Surface treatment: Silver powder coated
- Waterproof: Using o-ring inside and sheet packing. for both left-hand and right-hand ,use:the left-hand and right-hand use can be changed by reversing the cam and stopper plate.
- Uses: Communication cubicle, control panel, cabinet door,machinery equipment
- Note: Accessories TH-002, TH-004 and TM-818-1, -2

(TM-818-1
TM-818-2)

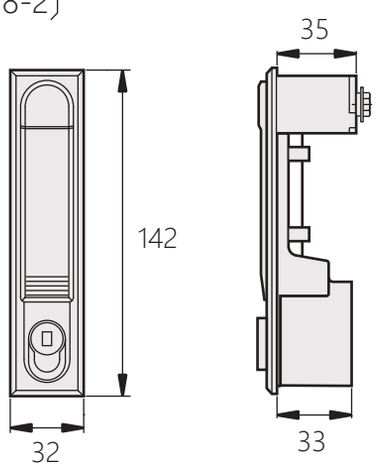

開孔尺寸(1)

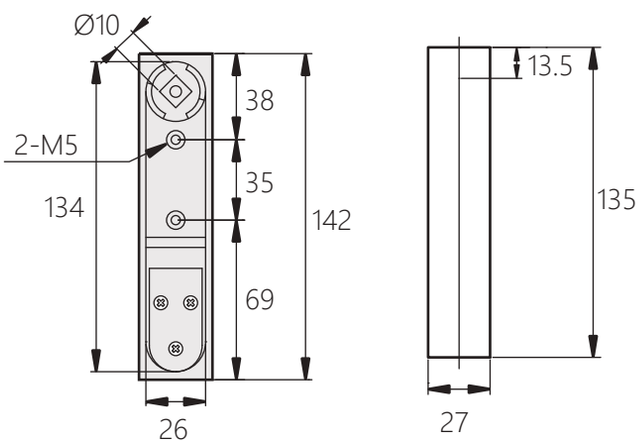

開孔尺寸(2)

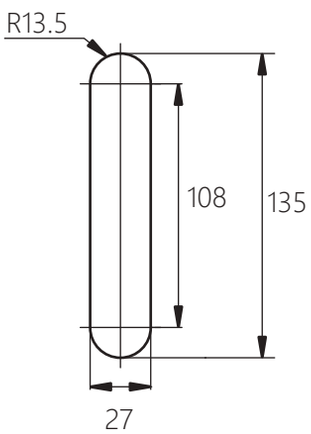

檔片型號	款式
TH-004	一字型
TH-002	T字型

商品型號	顏色
TM-818-1	黑鉻
TM-818-2	亮鉻
TM-818-3	黑亞光

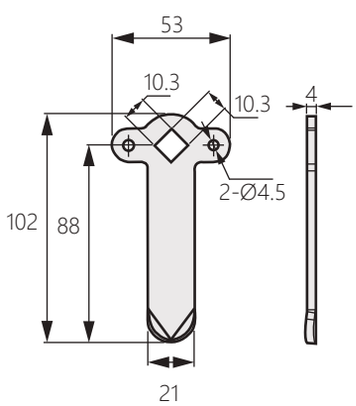

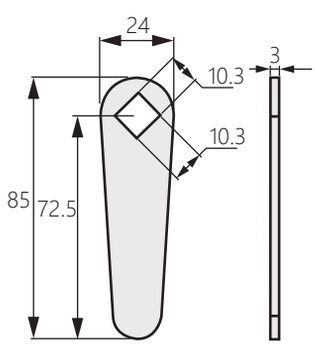

〔TM-818-3〕

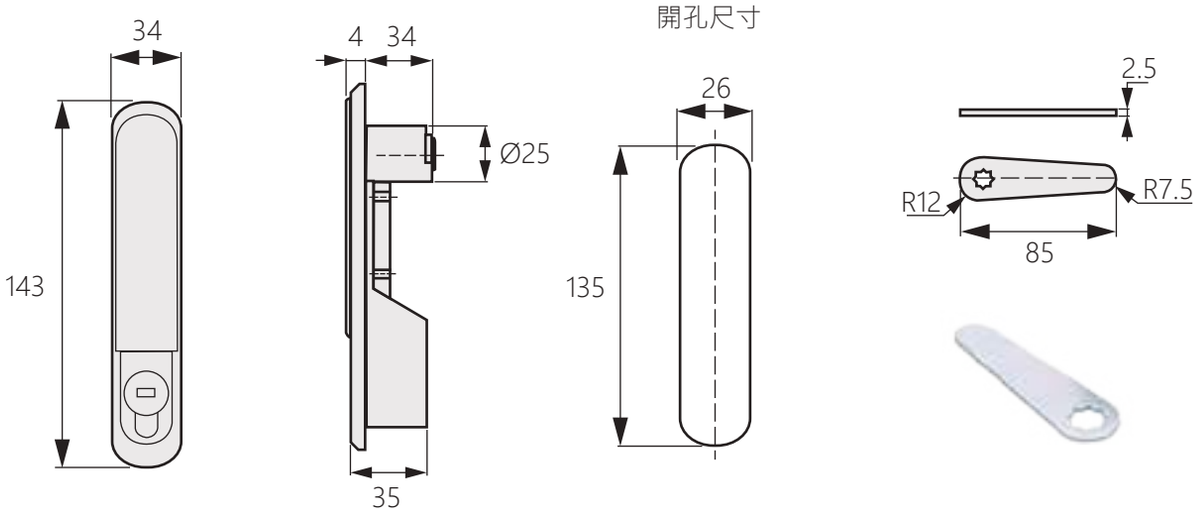

防水平面把手 TM-710

Waterproof flat handle



商品介紹:

- 防水設計:內部設置 O 型環，外部使用防水墊片
  左右開門通用:透過變更門擋片以及方向限位
  擋板的方向，即可實現左右開門使用
- 材質:鋅合金
- 表面處理:鍍鉻
- 用途:機櫃、配分電盤、機械設備

Product description:

- Waterproof: Using O-ring inside and sheet packing
  For both left-hand and right-hand use:
  The left-hand and right-hand use can be changed
  by reversing the cam and stopper plate.
- Material: Zinc Alloy
- Surface treatment: Electroplated With Chrome
- Communication cubicle, Control Panel, Cabinet Door, Machinery Equipment.

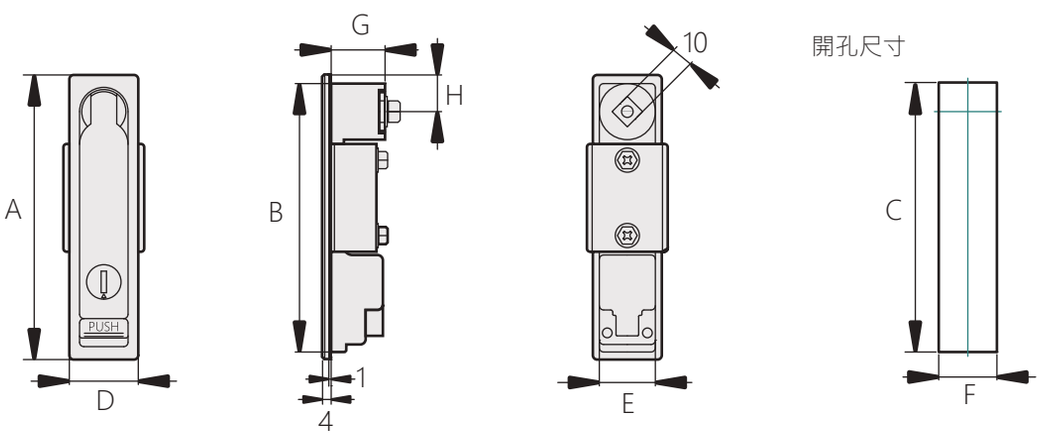

商品型號	A	B	C	D	E	F	G	H
TM-710-1	149	140	141	40	29	30	36	20
TM-710-2	132	124	125	32	26	27	25	17
TM-710-3	92	84	85	33.5	26.5	27.5	30	17

三點式天地連桿型門鎖

TM-828

3-Point Latching System Latch



商品介紹:

- 可單點、兩點或是兩點以上鎖定的門鎖，透過手柄的旋轉對多個鎖定機構進行上鎖或開鎖
- 材質:鋅合金
- 表面處理:銀色塗裝、 黑色烤漆
- 連桿傳動行程:上下端各16mm
- 用途:機櫃、配分電盤、機械設備

Product description:

- It enables single, two or more locks to be lockable and unlockable by turning one handle.
- Material:Zinc Alloy
- Surface treatment: Silver Powder Coated&Black Powder Coated
- Distance of the rod transmission :Top and bottom each 16mm
- Communication cubicle, Control Panel, Cabinet Door, Machinery Equipment.

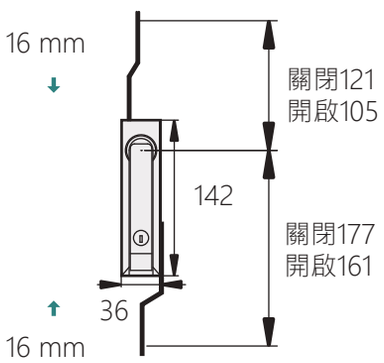

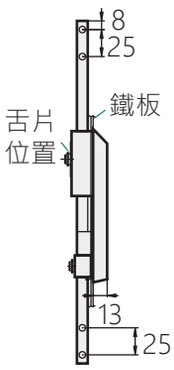

開孔尺寸

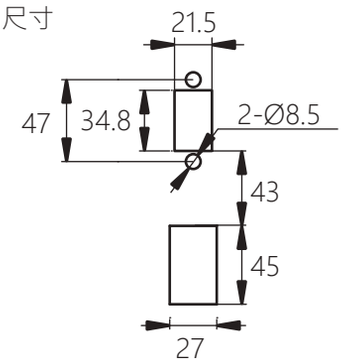

商品型號	顏色
TM-828-1	銀色塗裝
TM-828-2	黑色烤漆

防水平面把手

TM-713

Waterproof flat handle



商品介紹:

- 防水設計:內部設置 O 型環，外部使用防水墊片。左右開門通用:透過變更門擋片以及方向限位擋板的方向，即可實現左右開門使用
- 材質:鋅合金 (ZDC)
- 表面處理:黑色塗裝、銀色塗裝
- 用途:機櫃、配分電盤、機械設備

Product description:

- Waterproof: Using O-ring inside and sheet packing. For both left-hand and right-hand use:The left-hand and right-hand use can be changed by reversing the cam and stopper plate.
- Material: Zinc Alloy (ZDC)
- Surface treatment: Black coating, silver coating
- Uses: Cabinets, distribution boards, mechanical equipment.

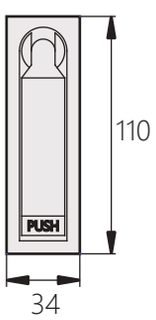

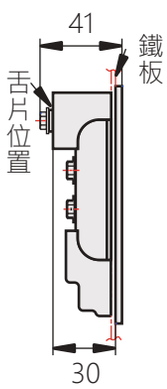

開孔尺寸

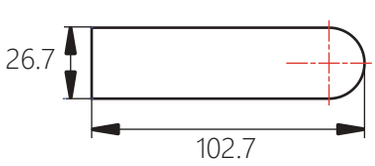

商品型號	表面處理
TM-713-1	黑色塗裝
TM-713-2	銀色塗裝

防水平面把手

Waterproof Flat Lift And Turn Latch

TM-843



商品介紹:

- 防水設計:內部設置O 型環，外部使用防水墊片
  左右開門通用:透過變更門擋片以及方向限位擋板的
  方向，即可實現左右開門使用
- 材質:鋅合金
- 表面處理:銀色塗裝
- 適用板厚:1.5 ~ 3 mm
- 用途:機櫃、配分電盤、機械設備

Product description:

- Waterproof: Using O-ring inside and sheet packing. For both left-hand and right-hand use:The left-hand and right-hand use can be changed by reversing the cam and stopper plate.
- Material: Zinc Alloy
- Surface treatment: Silver Powder Coated
- Panel Thickness: 1.5~3 m.m
- Uses: Server Rack, Communication cubicle, Control Panel,Cabinet Door, Machinery Equipment.

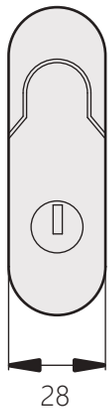

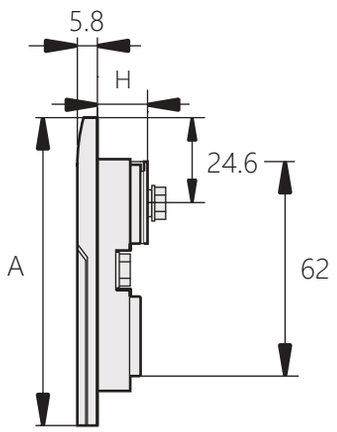

開孔尺寸

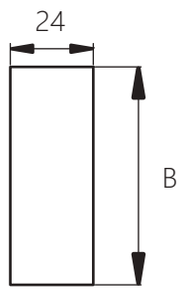

商品型號		A	H	B
有鎖	無鎖			
TM-843-1-1	TM-843-2-1	89	14.5	63
TM-843-1-2	TM-843-2-2	107	14.5	80
TM-843-1-3	TM-843-2-3	123	14.5	96

配件:



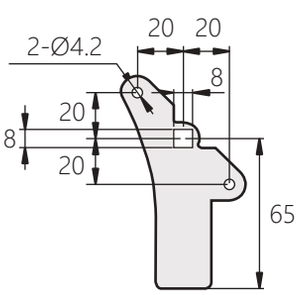



防水型平面門鎖

Waterproof flat door lock

TM-850



[TM-850-1]

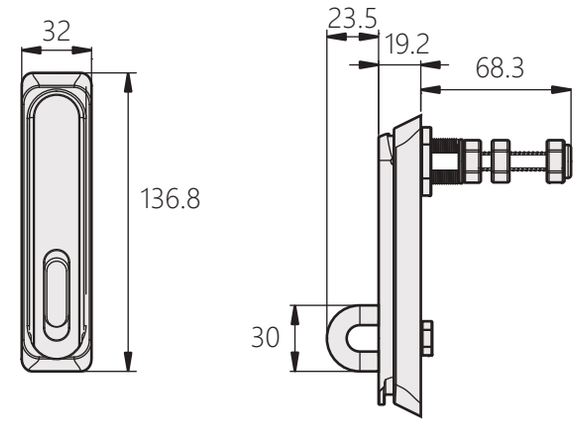

[TM-850-2]
[TM-850-3]

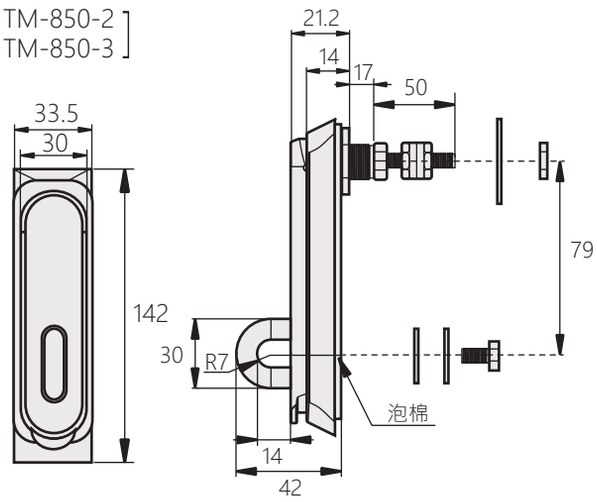

商品介紹:

TM-850-1:

- 抗腐蝕結構與材質，即便是安裝於室外，也能保持門扣的外觀與功能不變，可自行加裝掛鎖防盜
- 材質:不鏽鋼鑄件(SUS304)
- 表面處理:鏡面拋光
- 可調整擋片深度距離27~55 mm
- 適用板厚:1.2~8mm
- 用途:機櫃、配分電盤、機械設備

TM-850-2、TM-850-3:

- 長袖型和短袖型兩種型號可選
- 可加掛鎖
- 左右兼用型
- 材質:鋅合金
- 表面處理:鍍亮鉻、電泳黑
- 操作:把手打起，旋轉90度即可開門
- 用途:機箱機櫃、配電櫃、網絡機櫃

Product description:

TM-850-1:

- Corrosion-resistant structure and material, even when installed outdoors, can keep the door buckle The appearance and function are the same, you can add padlock security.
- Material: Stainless steel casting (SUS304)
- Surface treatment: Mirror polishing
- Adjustable blade depth distance 27~55 mm
- Applicable plate thickness: 1.2~8mm
- Uses: Cabinets, distribution boards, mechanical equipment.

TM-850-2、TM-850-3:

- Available in long sleeve and short sleeve versions
- Padlock
- Left and right
- Material: Zinc alloy
- Surface treatment: Bright chrome plating, electrophoresis black
- Operation: Handle up and rotate 90 degrees to open the door.
- Uses: Chassis cabinet, power distribution cabinet, network cabinet.

開孔尺寸

[TM-850-1]

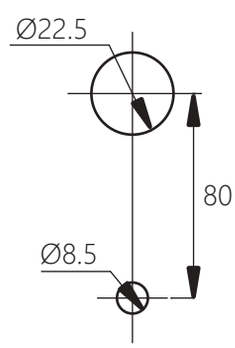

[TM-850-2]
[TM-850-3]

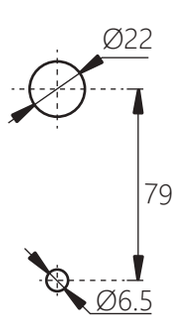

商品型號	規格	顏色
TM-850-2-1	長軸型	本體黑色、手柄亮色
TM-850-2-2	長軸型	外觀黑色
TM-850-2-3	長軸型	外觀亮色
TM-850-3-1	短軸型	本體黑色、手柄亮色
TM-850-3-2	短軸型	外觀黑色
TM-850-3-3	短軸型	外觀亮色

防水型平面門鎖

Waterproof Latch

TM-870



商品介紹:

TM-870-1:

- 使用防盜性強的鑰匙，適用於戶外
- 適用板厚:1.5 ~ 4 mm
- 材質: TM-870-1:鎖體&檔片SUS304，後方密封蓋-PA塑膠

TM-870-2、TM-870-3:

- 產品厚重，鎖定性能強
- 可配成三點鎖定的天地鎖
- 材質:
  TM-870-2:鋅合金
  TM-870-3:不鏽鋼
- 表面處理:
  TM-870-2:鍍亮鉻
  TM-870-3:拉絲拋光
- 用途:船舶、環境設備、無塵室、醫療儀器

Product description:

TM-870-1:

- Use a strong anti-theft key for outdoor use
- Applicable plate thickness: 1.5 ~ 4 mm
- Material: TM-870-1: Body&Pawl SUS304, Sealing cap-PA plastic

TM-870-2、TM-870-3:

- Heavy duty and strong latching performance
- Matching multi-point latching with three points
- Material:
  TM-870-2: Zinc alloy
  TM-870-3: Stainless steel
- Surface treatment:
  TM-870-2: Bright chrome
  TM-870-3: Bright polishing
- Uses: Ship, environmental equipment, clean room, medical equipment.

[TM-870-1]

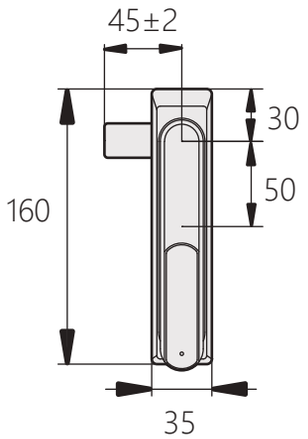

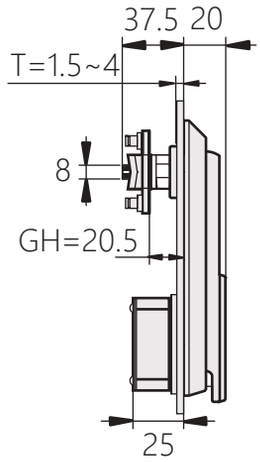

開孔尺寸

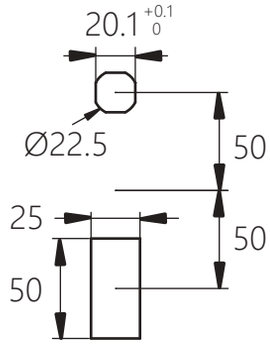

[TM-870-2
TM-870-3]

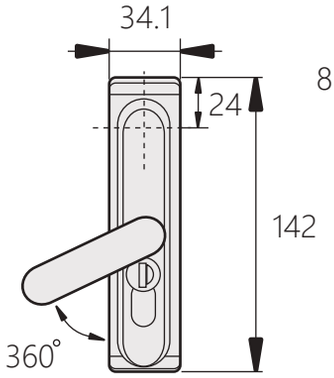

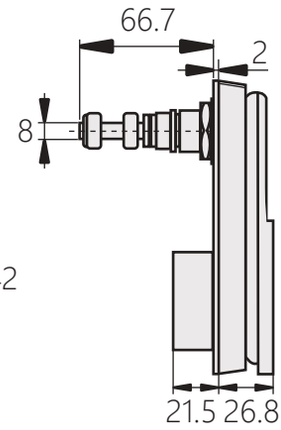

開孔尺寸

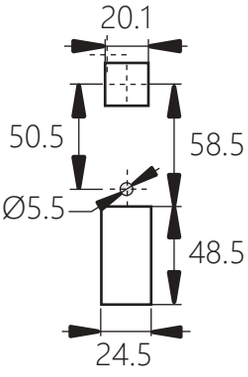

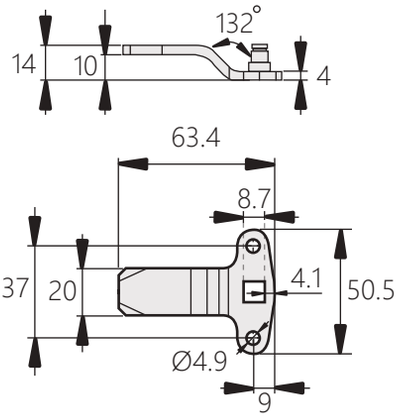

自動鎖

TM-2120

Automatic lock



商品介紹:
- 貨櫃門扣上時自動上鎖
- 表面處理:鏡面研磨
- 材質:不鏽鋼304脫臘鑄造
- 用途:貨櫃中大型門扇用

Product description:
- Automatically locked when the container door buckle is attached.
- Surface treatment: Mirror grinding
- Material: Stainless steel304 dewaxing casting
- Uses: For large door fans in containers.

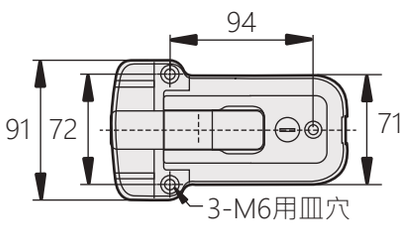

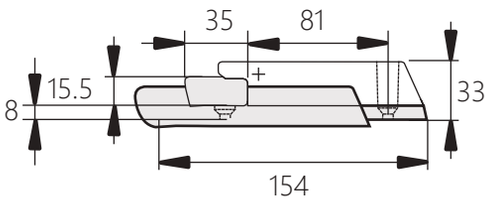

商品型號	規格
TM-2120-1	附鎖
TM-2120-2	無鎖

L型把手鎖

TM-102

L-shaped handle lock



商品介紹:
- 具有密封防水功能
- 材質:鋅合金
- 表面處理:納米亞光
- 用途:機箱機櫃、配電箱、電櫃

Product description:
- With sealed waterproof function
- Material: Zinc alloy
- Surface treatment: Nano Matt
- Uses: Chassis cabinets, distribution boxes, electrical cabinets.

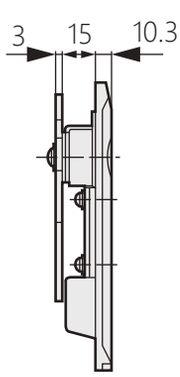

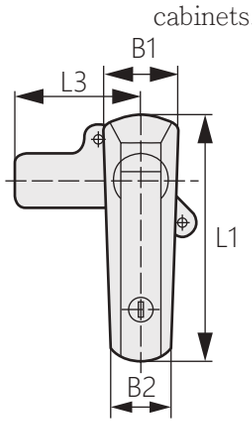

開孔尺寸

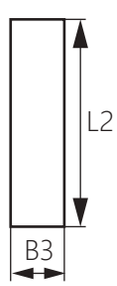

商品型號		L1	L2	L3	B1	B2	B3
有鎖	無鎖						
TM-102-1-1	TM-102-2-1	150.5	117	72.5	35.9	29.2	26.5
TM-102-1-2	TM-102-2-2	123.1	95.5	68.3	35.2	29.4	24
TM-102-1-3	TM-102-2-3	92.7	62.5	65.6	32.8	28	24

按壓式平面把手

TM-2160

Pressed flat handle



商品介紹:

- 材質:不鏽鋼316脫臘鑄造
- 表面處理:鏡面拋光
- 用途:半導體工程、工業工程、機械五金

Product description:

- Material: Stainless steel316 dewaxing casting
- Surface treatment: Mirror polishing
- Uses: Semiconductor engineering, industrial engineering, hardware control box, Mechanical door lock, electric control box.

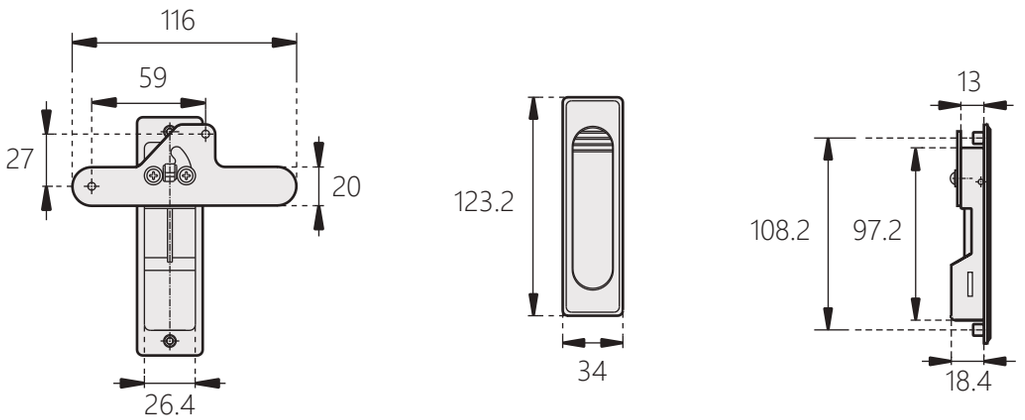

平面把手

TM-2170

Pressed flat handle



商品介紹:

- 材質:不鏽鋼316脫臘鑄造
- 表面處理:鏡面拋光
- 用途:配電盤、電控箱

Product description:

- Material: Stainless steel316 dewaxing casting
- Surface treatment: Mirror polishing
- Uses: Switchboard, electric control box.

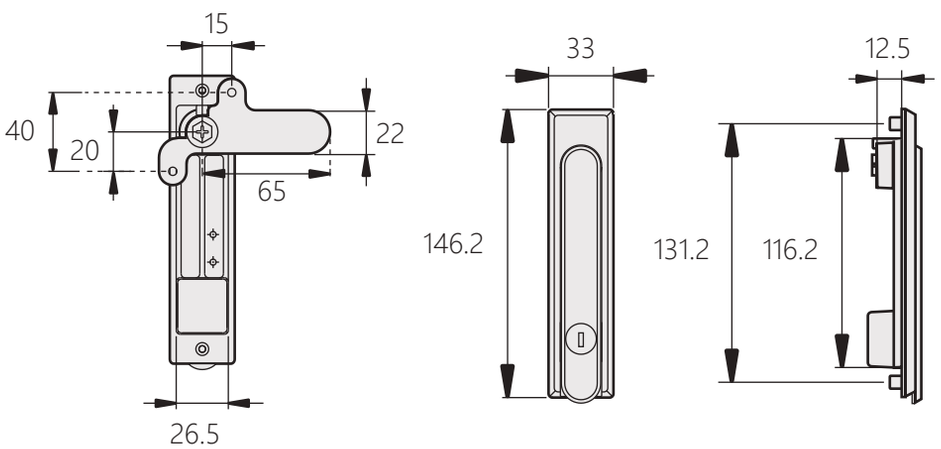

按壓式平面把手

TM-2180

Pressed flat handle



商品介紹:

- 材質:不鏽鋼316脫臘鑄造
- 表面處理:鏡面拋光
- 用途:配電盤、制御盤部品

Product description:

- Material: Stainless steel 316 dewaxing casting
- Surface treatment: Mirror polishing
- Uses: Switchboard, control disc parts.

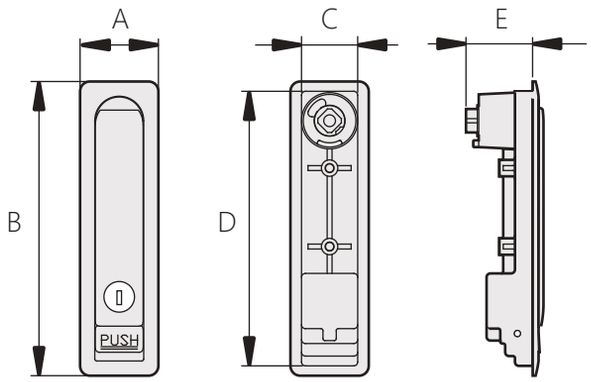

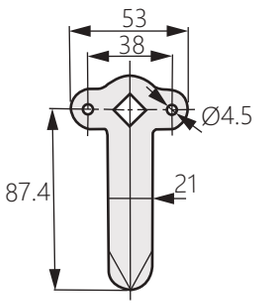

商品型號	B	D	A	C	E
TM-2180-1	150	140	40	28.7	27.5
TM-2180-2	135	125			

平面把手

TM-2190

Flat handle



商品介紹:

- 材質:不鏽鋼316脫臘鑄造
- 表面處理:鏡面拋光
- 用途:配電盤、制御盤部品

Product description:

- Material: Stainless steel 316 dewaxing casting
- Surface treatment: Mirror polishing
- Uses: Switchboard, control disc parts.

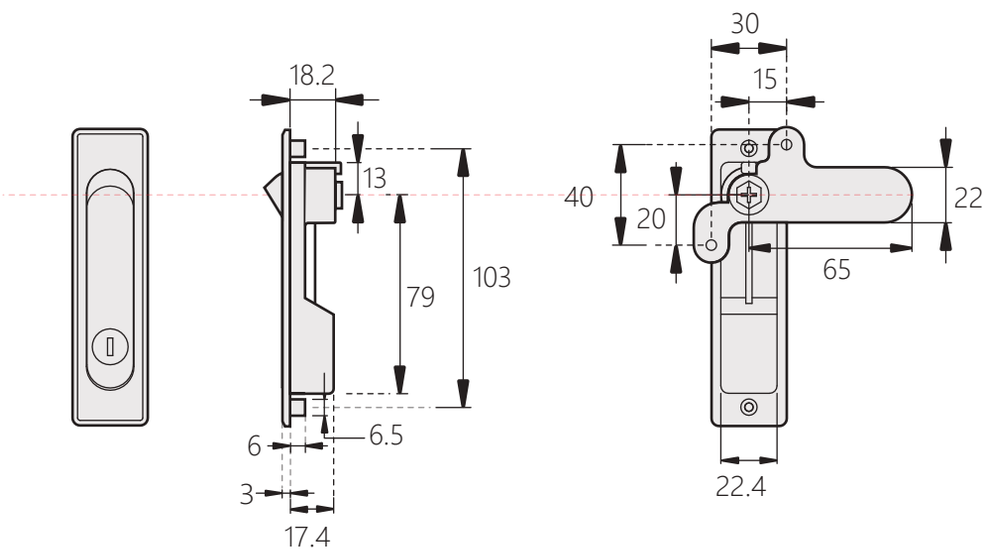

四碼密碼鎖

TM-100

Four-code password lock



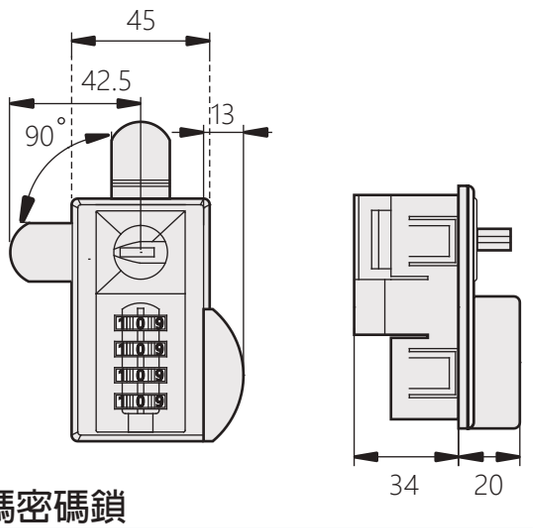

商品介紹:

- 管理者可重新設定密碼(四碼)，使用主鑰匙可解開所有密碼
- 材質:主體- 鋅合金，旋鈕、拉手柄及外觀包覆- 工程塑料、門擋片- 鐵鍍鋅
- 適用板厚:0.8-1.2 mm，可訂製其他板厚產品
- 用途:置物櫃、通信設備、機櫃、控制箱
- 備註:每100 個鎖具，附一把主鑰匙

Product description:

- Can establish the password again anytime, master key can open all locks that has already established the password.
- Material: Housing-Zinc Alloy (ZDC) ; Knob,handle and appearance parcel-ABS ; Cam-Steel(Zinc Plated)
- Panel Thickness: 0.8-1.2 mm,other thickness can customize.
- Uses: Locker,Communication cubicle, Control Panel, Cabinet Door, Machinery Equipment.
- Note: Per 100 pcs Locks, With one master key

開孔尺寸

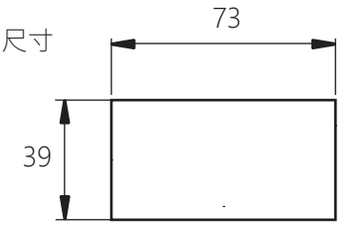

三碼密碼鎖

TM-200

Three-code password lock



商品介紹:

- 管理者可重新設定密碼(三碼)，使用主鑰匙可解開所有密碼
- 材質:尼龍
- 用途:置物櫃、通信設備、機櫃、控制箱

Product description:

- Can establish the password again anytime, master key can open all locks that has already established the password.
- Material: PA; Cam-Steel(Zinc Plated)
- Uses: Locker, Communications equipment, Control Panel,Cabinet Door, Machinery Equipment.

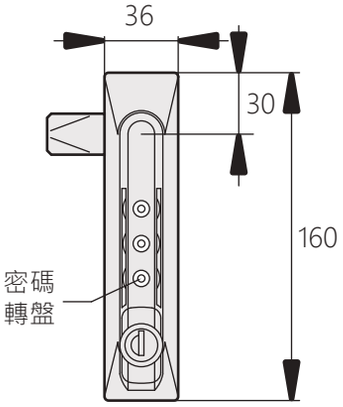

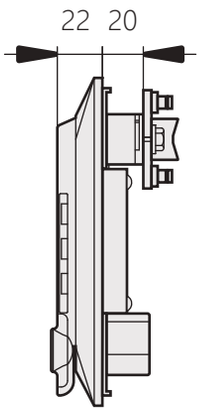

開孔尺寸

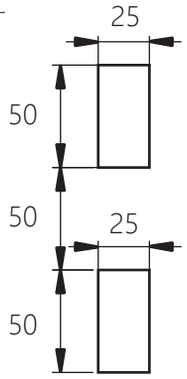

密碼鎖

Code Latch

TM-201



商品介紹:

- 左右開門都可以安裝
- 只需核對密碼，即可開鎖
- 由0-9的數字構成4位數密碼，可以有10000種密碼
- 材質:鋅合金(ZDC)
- 表面處理:槍黑色
- 用途:信息盤、通信用機架、網絡機櫃
- 備註:1.請定期在活動部位塗抹潤滑劑
  2.當遺忘密碼時，可用鑰匙開鎖重新設定
  3.請將密碼記錄在備忘錄中，以免忘記

Product description:

- Can be installed by opening the door left and right
- Just check the password and unlock it
- A number from 0-9 forms a 4-digit password and can have 10,000 passwords
- Material: Zinc Alloy (ZDC)
- Surface treatment: Gun black
- Uses: Information disk, communication rack, network cabinet.
- Note: 1. Please apply lubricant to the active part regularly.
  2. When the password is forgotten, it can be reset by key unlocking.
  3. Please put the password in the memo to avoid forgetting.

開孔尺寸

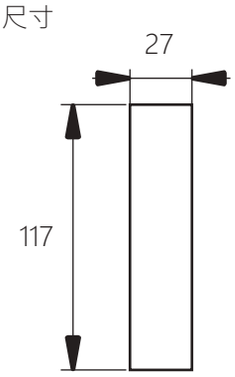

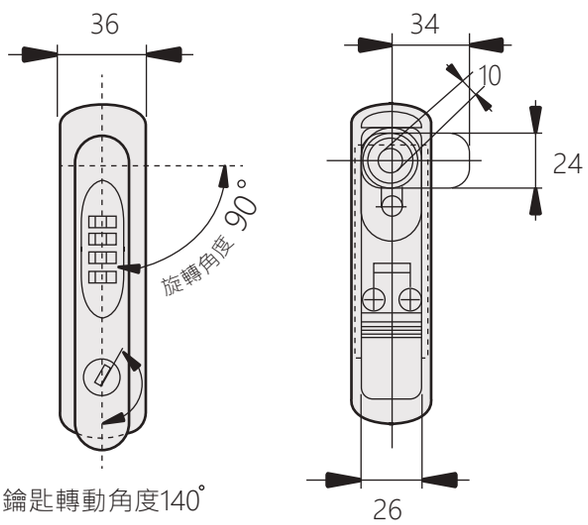

鑰匙轉動角度140°

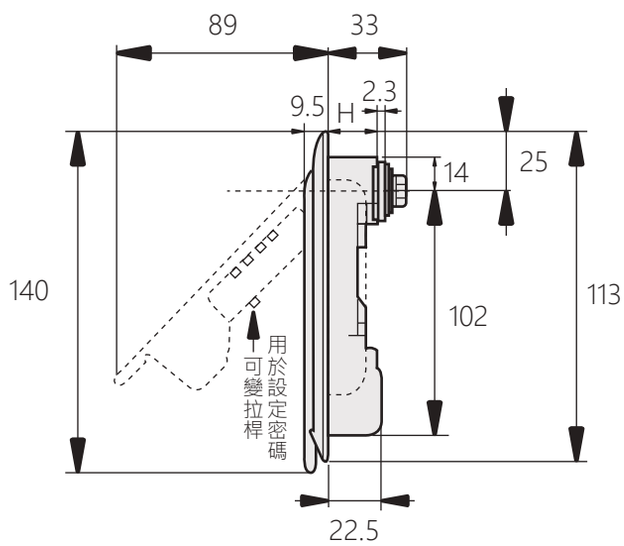

設置新密碼



當決定好自己
新的四位數密碼後
請先記錄在貼紙上

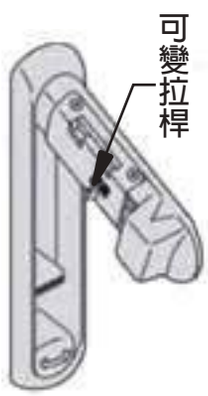

依次改成要設置的密碼修改時請務必確認密碼是否很整齊的顯示在手柄上方，如果密碼設定錯誤，則可能打不開鎖，敬請留意



設置好後，將可變拉桿復位，密碼設置完成,最後，將手柄恢復到原位，將面板數字調整到其他號碼，即上鎖，使用時，請確認是否為下圖所顯示的狀態，如果可變拉桿一直被提起，手柄將無法被鎖閉

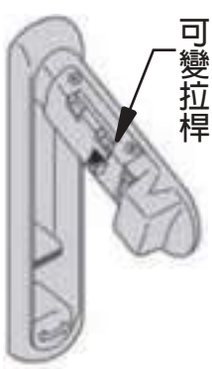

配電箱鎖

TM-089

Distribution box lock



商品介紹:

- 具有良好的鎖緊及防盜性能
- 手柄在鎖開啟後可自動撐起
- 材質:鋅合金、碳鋼、不鏽鋼
- 表面處理:黑色噴塗、納米亞光
- 用途:機箱機櫃、配電箱、製造設備
- 備註:可用於戶外通信機櫃

Product description:

- Has good locking and anti-theft performance
- The handle can be automatically lifted after the lock is unlocked.
- Material: Zinc alloy,Carbon steel, Stainless steel
- Surface treatment: Black spray, nano matt
- Uses: Chassis cabinets, distribution boxes, manufacturing equipment.
- Note: Can be used in outdoor communication cabinets.

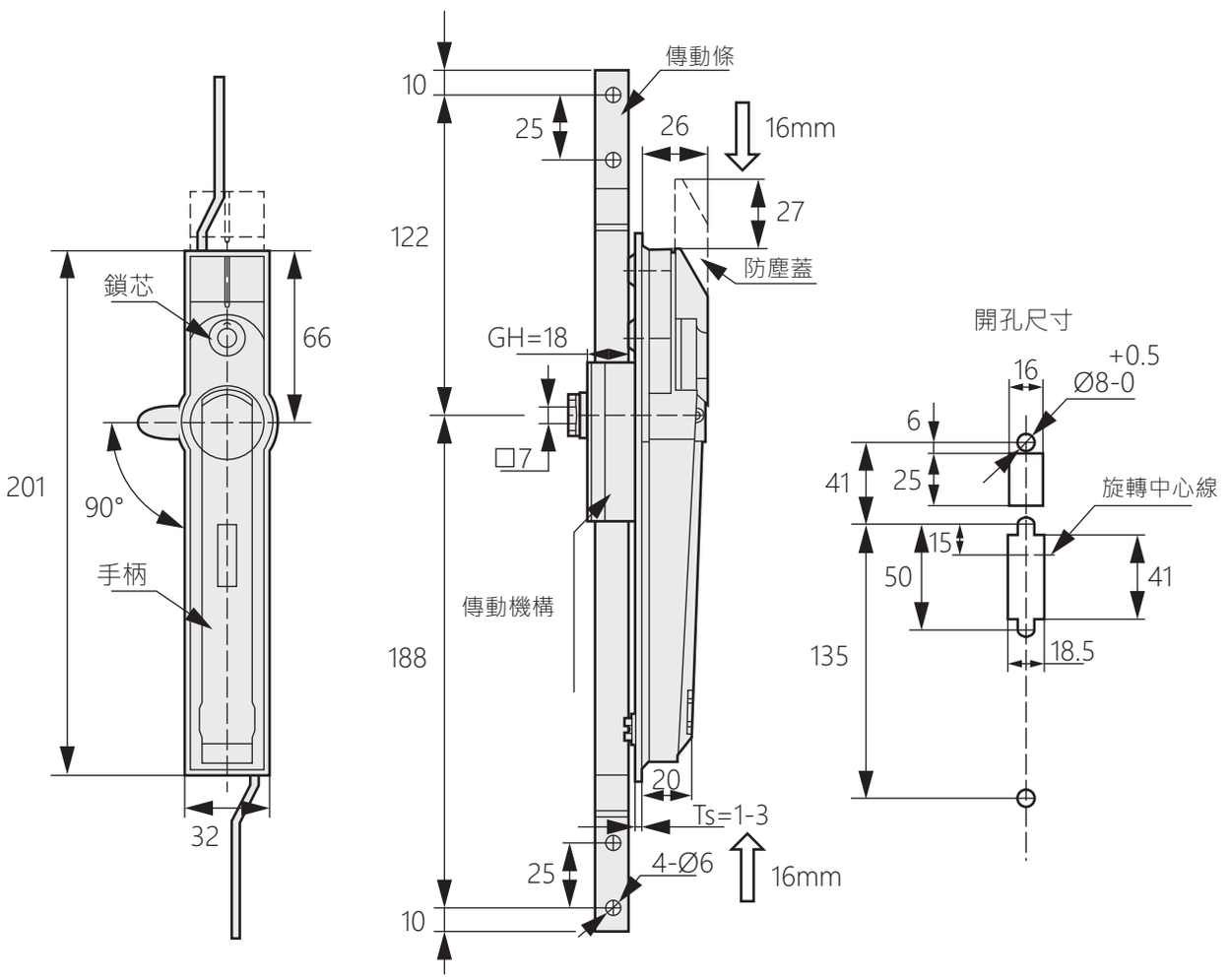

商品型號	樣式
TM-089-1	有鑰匙
TM-089-2	無鑰匙

網絡機櫃鎖

Network Cabinet Lock

TM-093



商品介紹:

- 傳動條可拆除，用作單點鎖定使用
- 傳動體作壓板用，具有密封防水功能
- 材質:鋅合金、冷軋鋼板
- 表面處理:銀色噴塗
- 用途:機箱機櫃、配電箱、網絡機櫃
- 備註:在拆除或改變傳動條位置時需要清楚部件之間的相互連接關係，否則容易裝配失敗

Product description:

- Removable drive bar for single point locking
- The transmission body is used as a pressure plate, which has a waterproof function.
- Material: Zinc alloy, Cold rolled steel plate
- Surface treatment: Silver spray
- Uses: Chassis cabinets, distribution boxes, network cabinets.
- Note: When removing or changing the position of the drive bar, you need to be clear about the interconnections between the components, otherwise it is easy to fail to assemble.

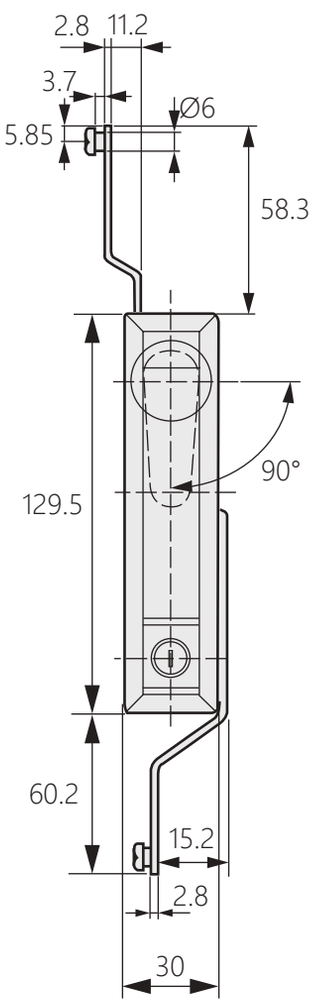

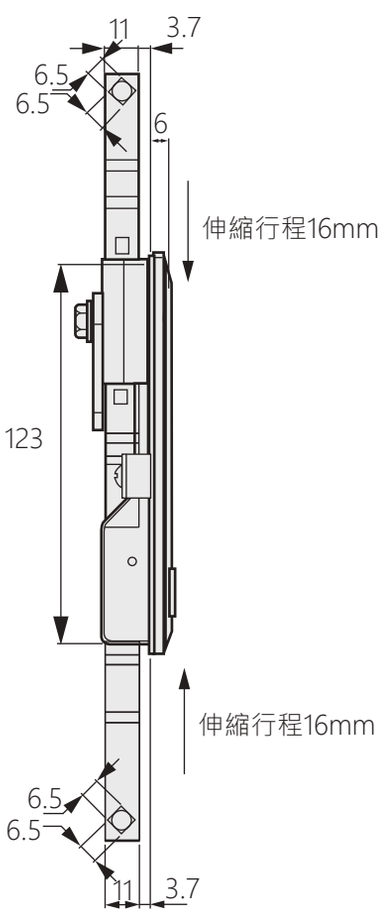

開孔尺寸

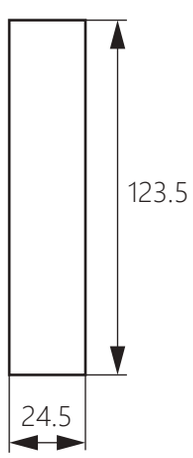

三點式天地連桿型門鎖 TM-831

3-Point Latching System Latch



[TM-831-1]　　[TM-831-2]

商品介紹:

- 可單點、兩點或是兩點以上鎖定的門鎖，透過手柄的旋轉對多個鎖定機構進行上鎖或開鎖
- 材質:鋅合金
- 表面處理:黑色塗裝
- 用途:機櫃、配分電盤、機械設備
- 連桿傳動行程:上下端各 16mm

Product description:

- It enables single,two or more locks to be lockable and unlockable by turning one handle
- Material: Zinc Alloy (ZDC)
- Surface treatment: Black Powder Coated
- Uses: Communication cubicle, Control Panel, Cabinet Door,Machinery Equipment.
- Distance of the rod transmission: Top and bottom each 16mm.

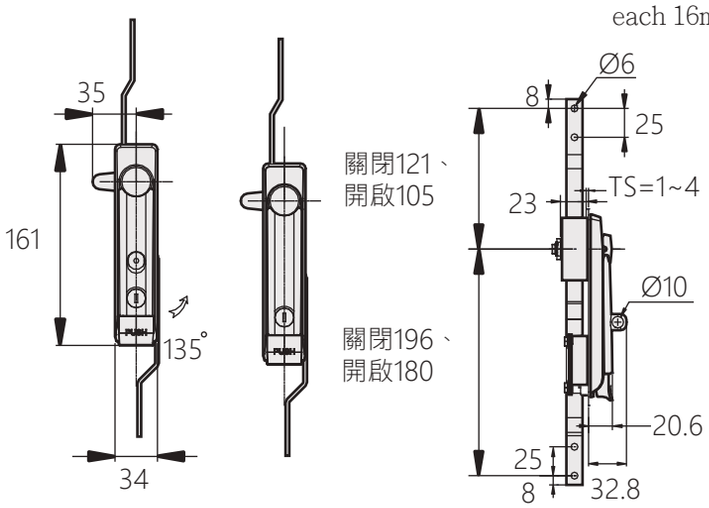

開孔尺寸

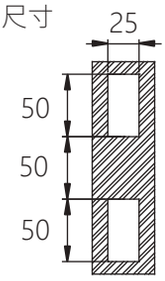

商品型號	規格
TM-831-1	帶掛鎖孔
TM-831-2	無掛鎖孔

提桿拉緊鎖 TM-085

Lift lever lock



商品介紹:

- 採用齒輪、齒條傳動，可供兩點、三點鎖定
- 防水性能強
- 材質:鋅合金、PA-6塑膠
- 表面處理:黑色烤漆
- 用途:箱體、配電盤、車輛門板
- 操作:旋轉鑰匙的同時將鑰匙提起，即可開門

Product description:

- Gear and rack drive for two- and three-point locking.
- Waterproof performance
- Material: Zinc alloy, PA-6 plastic
- Surface treatment: Black paint
- Operation: Lift the key while turning the key to open the door.
- Uses: Box, switchboard, vehicle door panel.

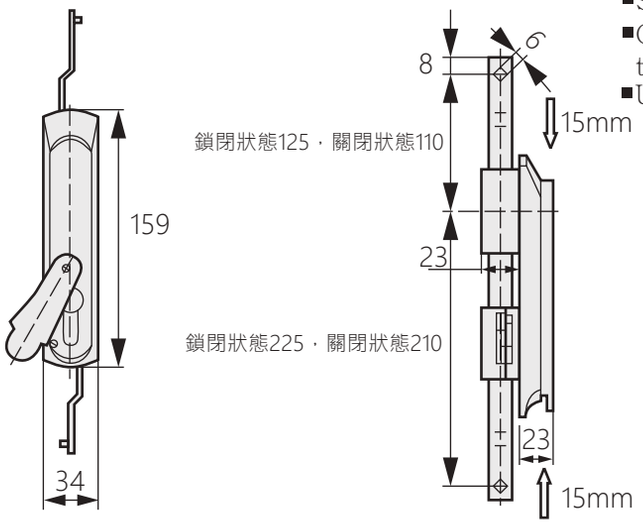

開孔尺寸

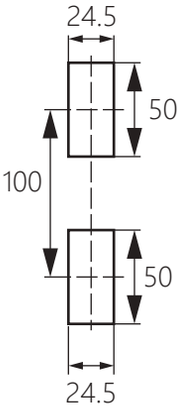

三點式天地連桿型門鎖

3-Point Latching System Latch

TM-838



商品介紹:

- 可單點、兩點或是兩點以上鎖定的門鎖，透過手柄的旋轉對多個鎖定機構進行上鎖或開鎖
- 材質:鋅合金
- 表面處理:銀色塗裝、黑色烤漆
- 連桿傳動行程:上下端各16mm
- 用途:機櫃、配分電盤、機械設備

Product description:

- It enables single,two or more locks to be lockable and unlockable by turning one handle.
- Material: Zinc Alloy
- Uses: Communication Equipment, Control Panel, Cabinet Door, Machinery Equipment.

[TM-838-1]

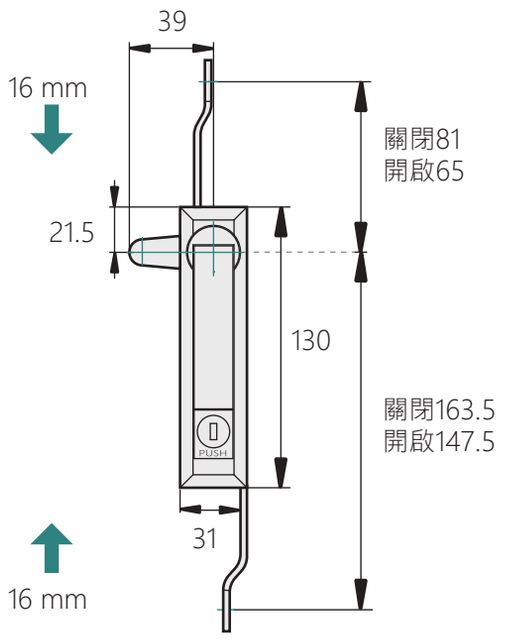

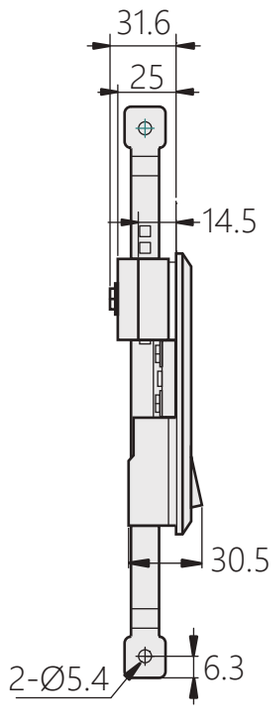

開孔尺寸

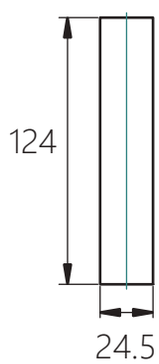

商品型號	顏色
TM-838-1	黑色烤漆
TM-838-2	銀色塗裝

[TM-838-2]

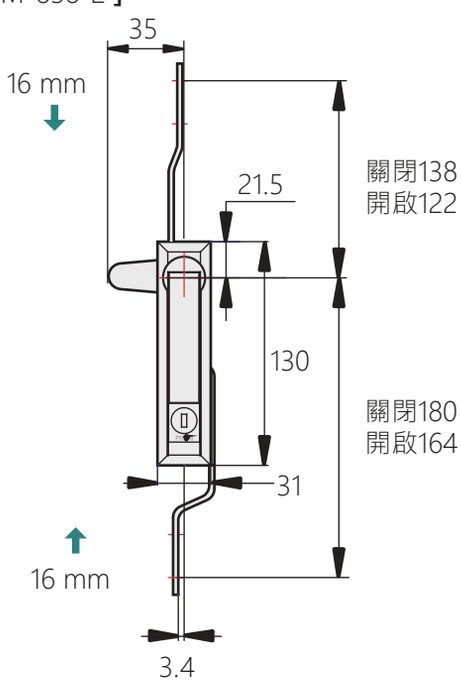

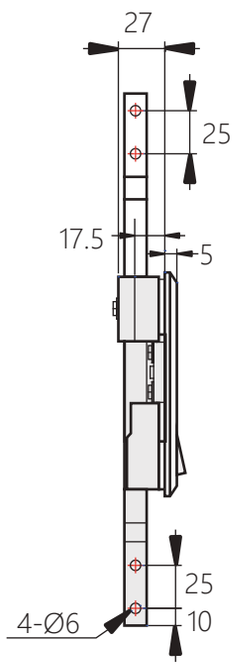

開孔尺寸

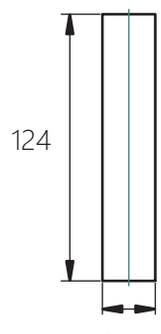

防爆門扣

TM-110

Explosion-proof door buckle



商品介紹:

- 高溫高壓下可自動彈開
- 回壓功能、密封性能強
- 材質:鋅合金
- 用途:冷凍庫、冷凍櫃、 械設備
- 備註:可選配TM-110-11、TM-110-12、TH-A-90、TH-A-46任一搭配

Product description:

- Automatically bounces off under high temperature and high pressure
- Back pressure function, strong sealing performance
- Material: Zinc Alloy
- Uses: Freezer, oven and other mechanical equipment.
- Note: Optional TM-110-11, TM-110-12, TH-A-90, TH-A-46

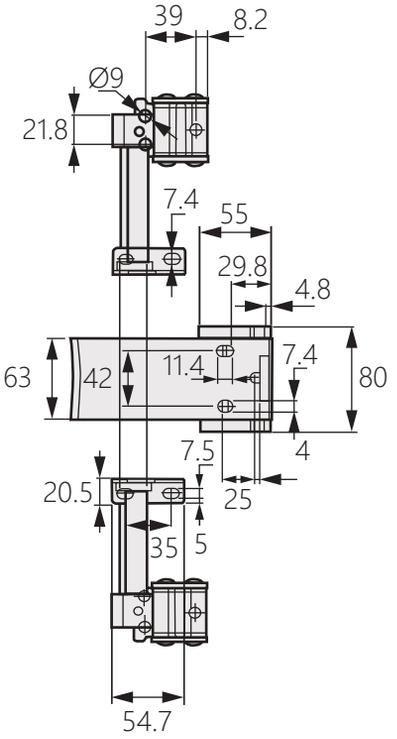

〔TM-110-7〕



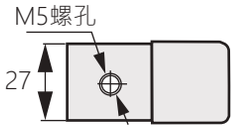

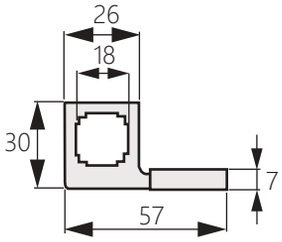

〔TM-110-1〕



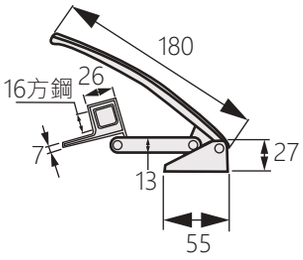

〔TM-110-10〕



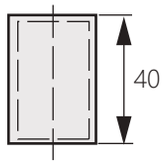

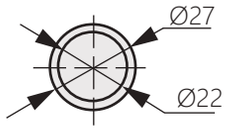

示意圖





TM-110-8
TM-110-9

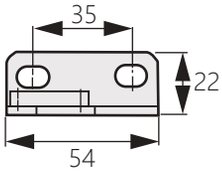

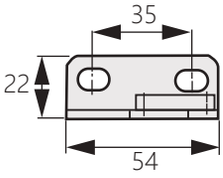

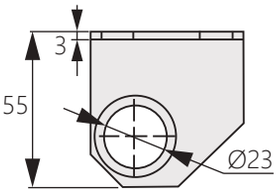

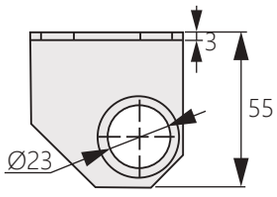

商品型號	品名	內含數量
TM-110-1	防爆門把手	1
TM-110-7	轉扣	2
TM-110-8	左支架	2
TM-110-9	右支架	2
TM-110-10	套筒	2

〔TM-110-12〕



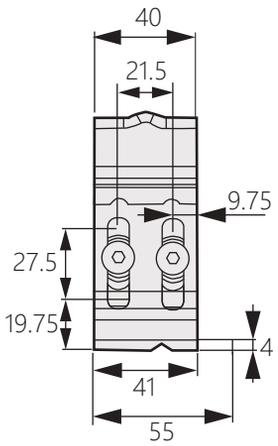

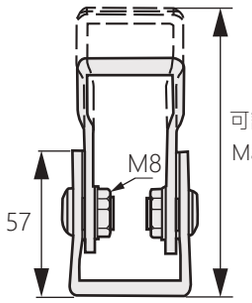

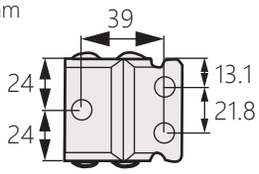

〔TM-110-11〕



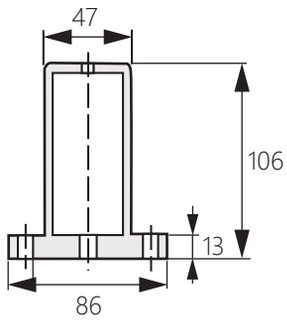

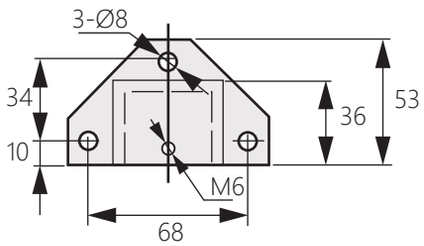

商品型號	配件	內含數量
TM-110-11	扣座	2
TM-110-12	扣座	2
TH-A-90	高扣座	2
TH-A-46	低扣座	2

*可單獨購買,如有需求歡迎洽詢

販賣機櫃鎖 TM-911

Selling cabinet locks



商品介紹:

- 7星彈子結構，通開或10000個不同號碼
- 尺寸:M28 * L61.4MM
- 材質:鋅合金(ZDC)
- 表面處理:鍍亮鉻
- 用途:自動販售機、遊戲機、洗車機

Product description:

- 7-star marble structure, open or 10,000 different numbers
- Size: M28 * L61.4MM
- Material: Zinc Alloy (ZDC)
- Surface treatment: Bright chrome
- Uses: Vending machine, game machine, car washing machine.

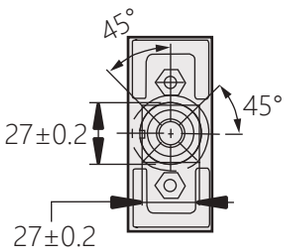

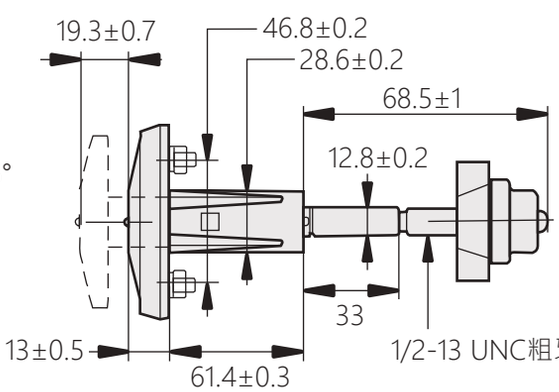

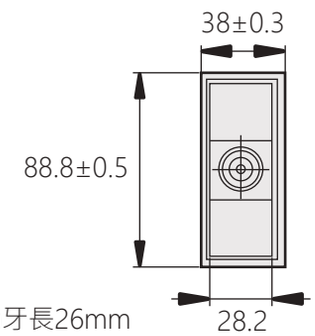

防燙門把手

TM-120

Anti-scalding door handle



商品介紹:

- 調節座子可調整密封條壓緊程度
- 材質:鋅合金(ZDC)
- 表面處理:黑色烤漆
- 產品用途:烤箱、恆溫恆濕箱、環境試驗箱

Product description:

- Adjusting the seat to adjust the tightness of the seal.
- Material: Zinc alloy (ZDC)
- Surface treatment: Black paint
- Use: Oven, constant temperature and humidity chamber, environmental test chamber.

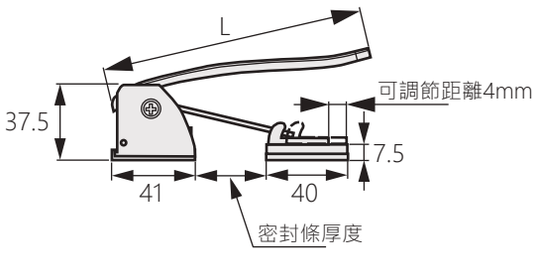

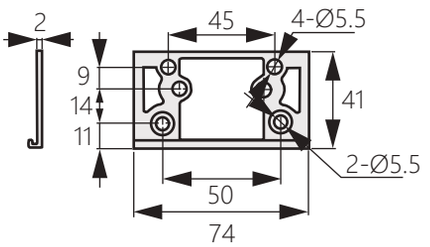

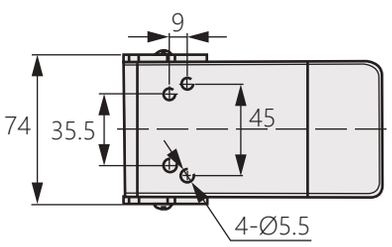

商品型號	樣式	L
TM-120	短款	100
TM-120-1	長款	130

安裝示意圖

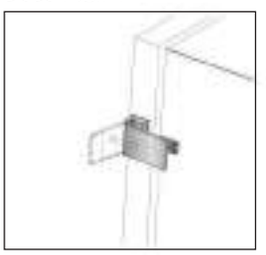

側門壓縮把手

TM-153

Side door compression handle



商品介紹:

- 調節鉤環可調節壓縮密封性
- 材質:不鏽鋼（SUS304）
- 表面處理:鏡面拋光、手柄包膠
- 用途:烤箱、恆溫恆濕箱、環境試驗箱等
- 備註:安裝時請先安裝底板

Product description:

- Adjustable shackle to adjust compression tightness.
- Material: Stainless steel (SUS304)
- Surface treatment: Mirror polishing, handle rubber coating
- Uses: Oven, constant temperature and humidity box, environmental test box, etc.
- Note: Please install the base plate before installation.

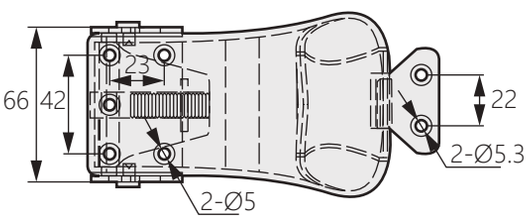

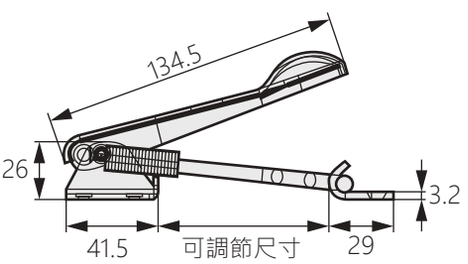

恆溫恆濕箱門扣 TM-112

Constant temperature and humidity box door buckle



商品介紹:
- ■具有強力扣緊功能
- ■材質:冷軋鋼板（SPCC）
- ■表面處理:黑色烤漆
- ■用途:烤箱、試驗箱、恆溫恆濕箱等
- ■備註:若箱體內壓力過大可自行彈開

Product description:
- ■With strong fastening function
- ■Material: Cold rolled steel plate (SPCC)
- ■Surface treatment: Black paint
- ■Uses: Oven, test box, constant temperature and humidity box, etc.
- ■Note: If the pressure inside the box is too large, it can pop open by itself.

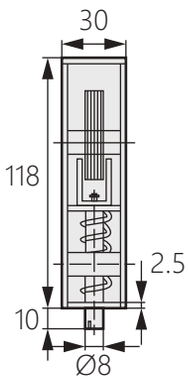

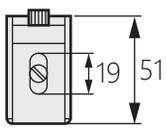

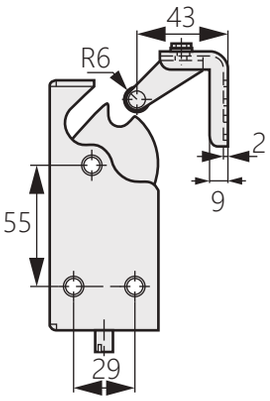

醫療低溫箱把手 TM-1627

Medical cryochamber handle



商品介紹:
- ■偏心結構設計，可實現迫緊功能
- ■手柄包膠處理，可滿足低溫或高溫環境應用
- ■材質:不鏽鋼SUSU304
- ■表面處理:震動研磨
- ■用途:醫療低溫箱、食品機械、檢測設備

Product description:
- ■Eccentric structure design for urgent functions
- ■The handle is covered with plastic, which can meet the application of low temperature or high temperature environment.
- ■Material: Stainless steel (SUSU304)
- ■Surface treatment: Vibration grinding
- ■Uses: Medical cryogenic box, food machinery, testing equipment.

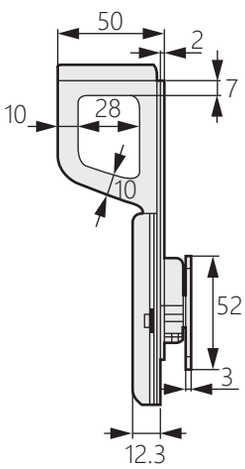

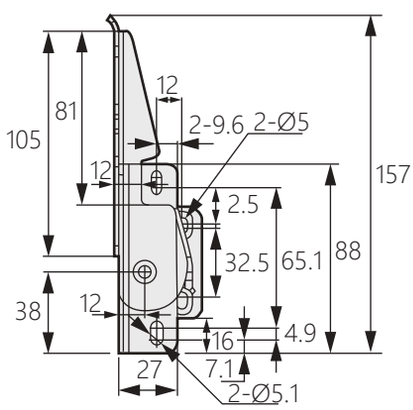

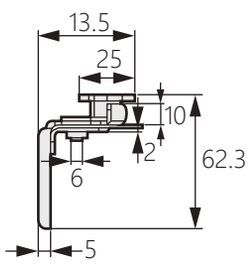

面板鎖

Panel lock

TM-106

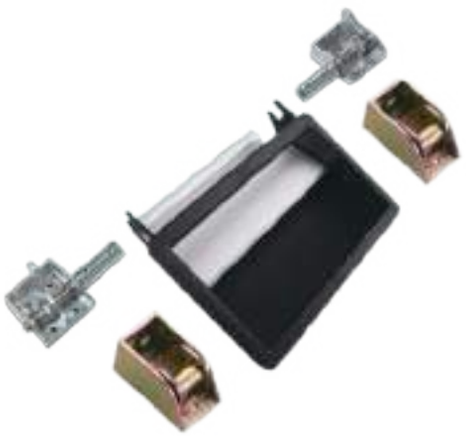

商品介紹:

- ■關閉時推動門可自行碰撞鎖住
- ■材質:座子鋅合金、鉤鎖鋅合金（ZDC）、把手框塑膠（PA）、把手鋁擠型
- ■表面處理:座子鍍彩鋅、鉤鎖鍍彩鋅、把手框黑色、把手噴80號砂
- ■用途:恆溫環溫箱、烤箱、試驗箱
- ■備註:需自配六角連桿

Product description:

- ■The door can be locked and locked by itself when the door is closed.
- ■Material: Zinc alloy seat, zinc alloy hook (ZDC), plastic handle frame (PA), aluminum extrusion handle.
- ■Surface treatment: Seat galvanized, hook galvanized, handle frame black, handle 80 sand.
- ■Uses: Constant temperature ring oven, oven, test box.
- ■Note: Need to be equipped with hexagonal connecting rod.

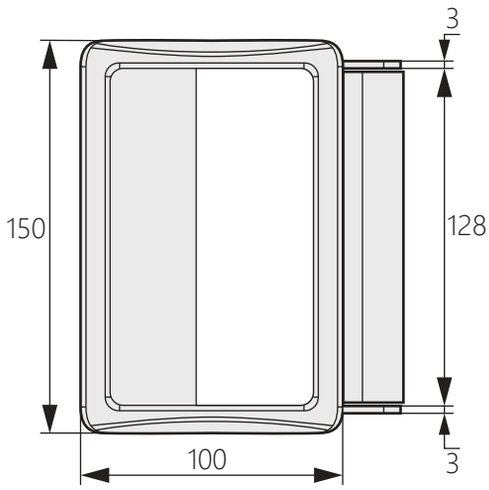

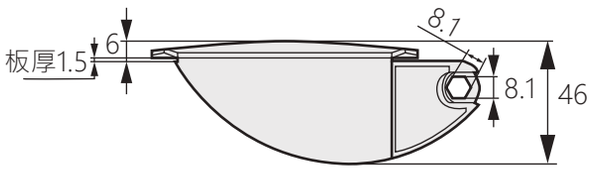

開孔尺寸

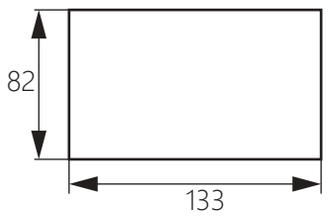

鉤鎖

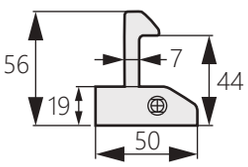

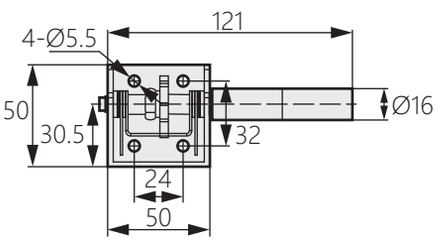

鉤座

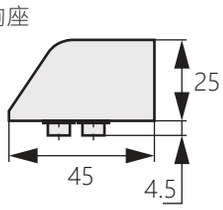

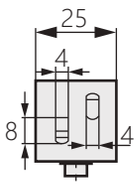

安裝示意圖



品名	內含數量
鉤座	2
鉤鎖	2

側門撞擊鎖

Side door impact lock

TM-111



商品介紹:

- 具有強力迫緊功能
- 材質:不鏽鋼（SUS304)、ABS外殼
- 表面處理:黑色包膠
- 用途:烤箱、試驗箱、恆溫恆濕箱
- 備註:帶鎖芯、可鎖定不被彈開

Product description:

- With lock cylinder, can be locked well without being bombed.
- Material: Stainless steel (SUS304)、ABS shell
- Surface treatment: Black rubber
- Uses: Oven, test box, constant temperature and humidity box.
- Note: With lock cylinder, can be locked without springing off.

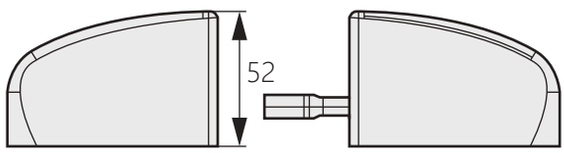

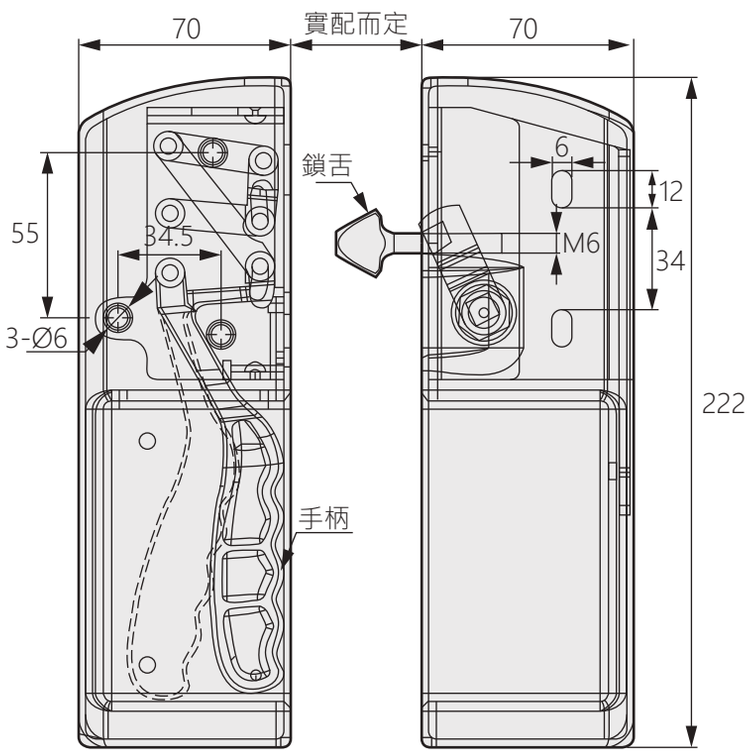

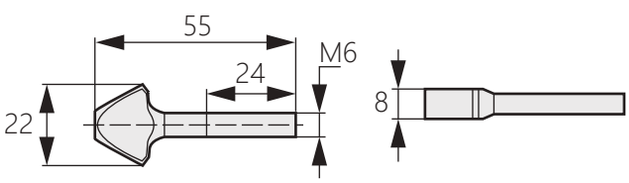

商品型號	表面顏色
TM-111B	黑色
TM-111W	米白色

側門聯動迫緊把手

Side door linkage pressing handle

TM-1937



商品介紹:

- ■具有壓縮迫緊功能
- ■通過連接鋼管，可同步操作大型門的兩處鎖點
- ■迫緊行程可通過手柄鎖舌齒調節
- ■材質:本體鋅壓鑄
- ■表面處理:噴塗黑色（可批量訂製）
- ■用途:生物醫療箱、環境試驗箱
- ■備註:左右可切換安裝型

Product description:

- ■With compression urgency function
- ■By connecting steel pipes, two lock points of large doors can be operated simultaneously.
- ■Pressing stroke can be adjusted by handle lock tongue.
- ■Material: Zinc die casting
- ■Surface treatment: Spray black (can be customized in batches)
- ■Uses: Biological medical box, environmental test box.
- ■Note: Left and right switchable installation type.

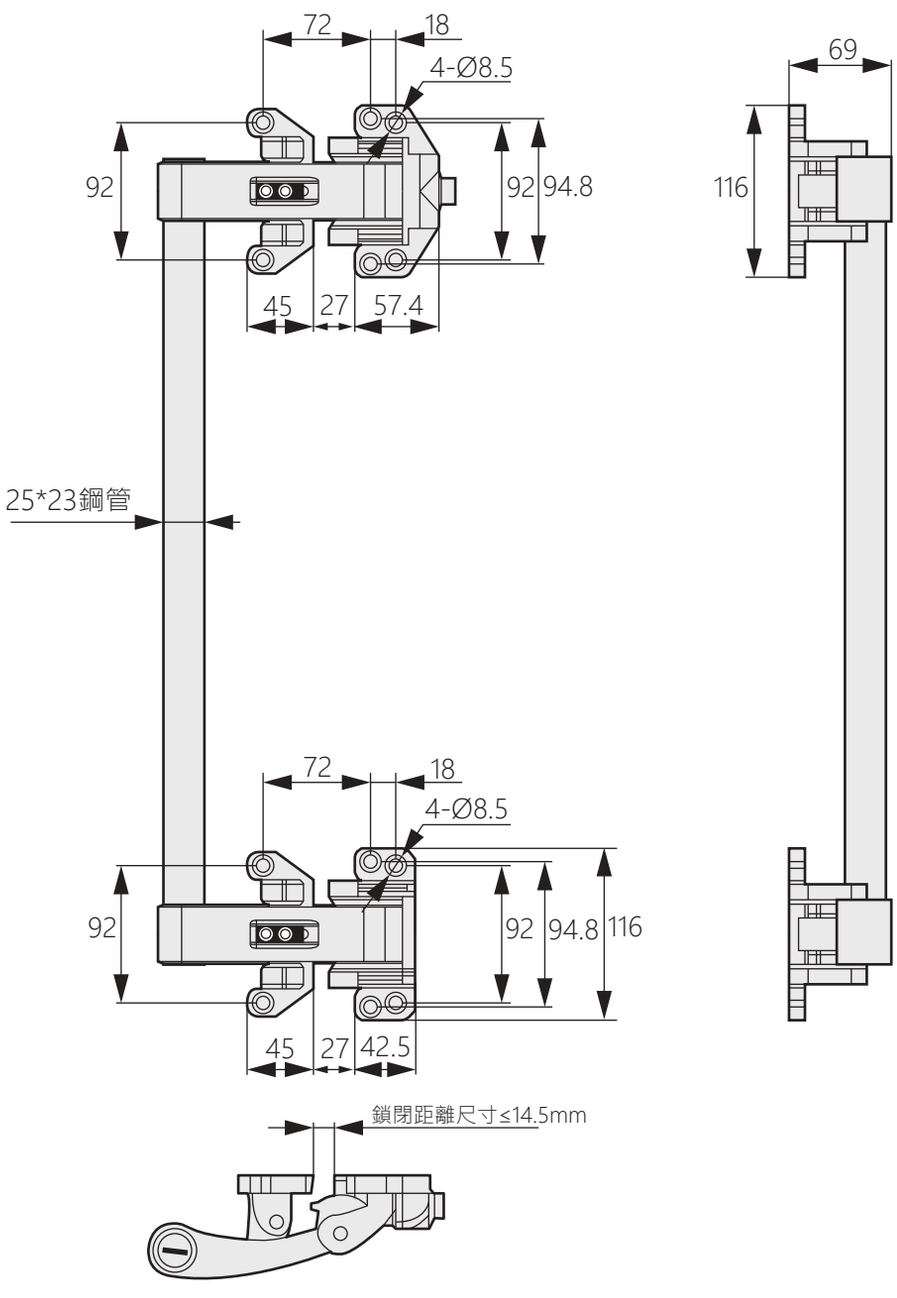

鋅合金迫緊門把手

Zinc alloy pressing door handle

TM-078-4



商品介紹:

- ■配帶鎖芯、單點鎖定
- ■內置彈簧結構、方便開啟和關閉
- ■材質:鋅合金
- ■表面處理:鍍亮鉻
- ■用途:烤箱、試驗箱、測試箱體
- ■備註:不鏽鋼管需要自配

Product description:

- ■With lock cylinder, single point locking
- ■Built-in spring structure for easy opening and closing.
- ■Material: Zinc alloy
- ■Surface treatment: Bright chrome plating
- ■Uses: Oven, test box, test box.
- ■Note: Stainless steel pipes need to be self-matched.

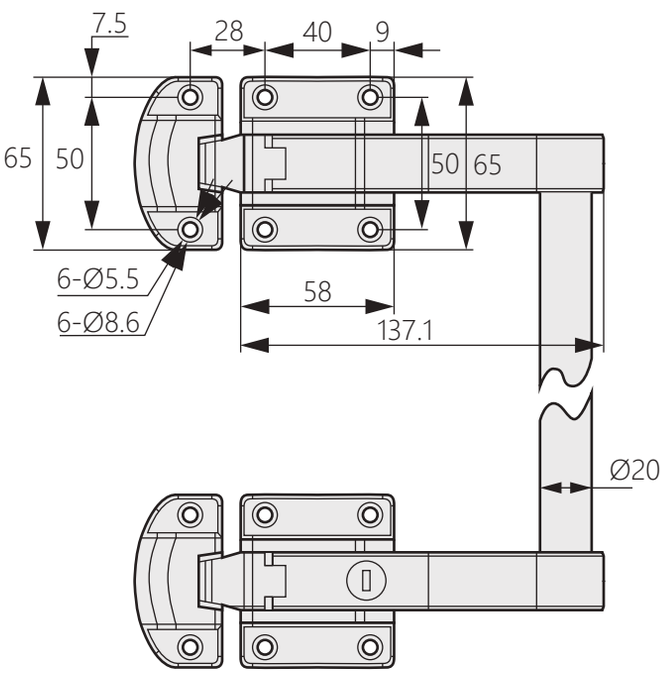

安裝示意圖

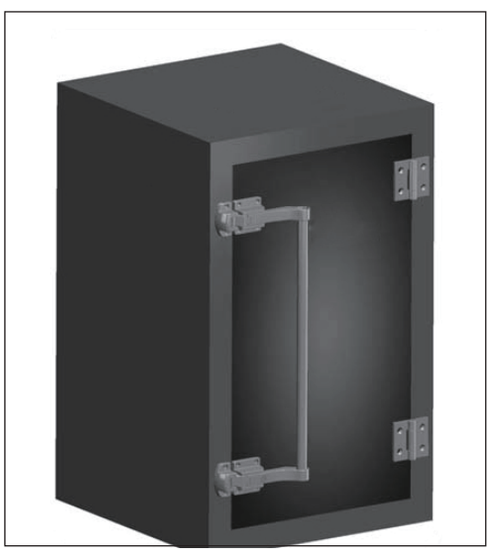



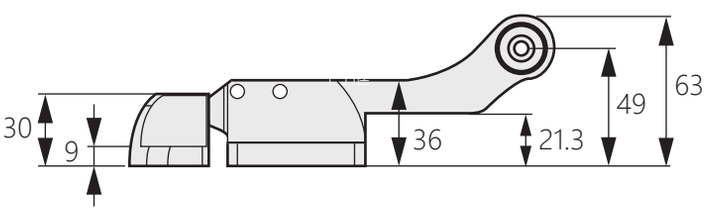

密閉聯動把手

Closed linkage handle

TM-0418



商品介紹:

- 通過連接鋼管，可同步操作大型門的兩處鎖點
- 材質:鋅合金
- 表面處理:鍍亮鉻
- 用途:組合式冷凍冷藏庫、步入式冷凍冷藏庫及步入式試驗箱等
- 備註:座子可配高座或者矮座(TH-0418-1,TH-0418-2)
  不鏽鋼管需要自配，全不鏽鋼材質為訂製品

Product description:

- By connecting steel pipes, two lock points of large doors can be operated simultaneously.
- Material: Zinc alloy
- Surface treatment: Bright chrome plating
- Uses: Combined freezers, walk-in freezers, walk-in test chambers, etc.
- Note: The seat can be equipped with a high seat or a low seat (TH-0418-1, TH-0418-2),Stainless steel pipes need to be self-made, all stainless steel materials are customized products.

冷凍庫安裝圖



烤箱安裝圖



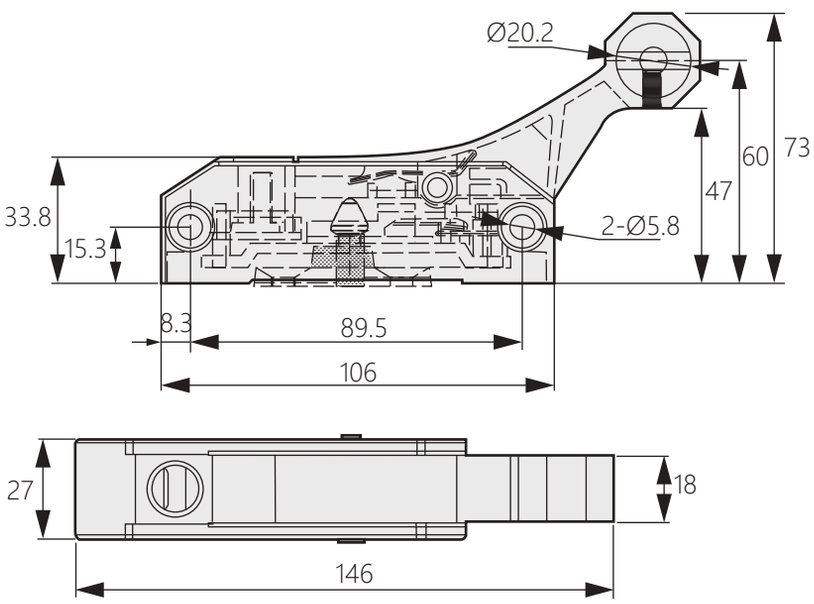

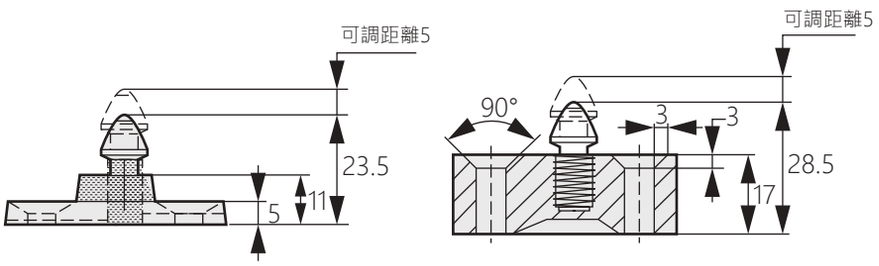

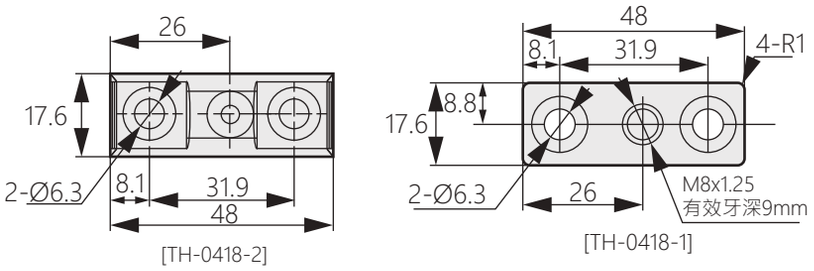

商品型號	品名
TH-0418-1	高座
TH-0418-2	矮座

密閉聯動把手

Closed linkage handle

TM-903



商品介紹:

- ■通過鏈接鋼管，可同步操作大型門的兩處鎖點
- ■具有壓縮迫緊功能
- ■材質:不鏽鋼SUS304
- ■表面處理:鏡面拋光
- ■用途:組合式冷凍冷藏庫、步入式冷凍冷藏庫、步入式試驗箱等
- ■備註:可配TM-622一起使用,座子可配高座(TH-903-1)矮座(TH-903-2)

Product description:

- ■By linking steel pipes, two locking points of large doors can be operated simultaneously.
- ■With compression urgency function
- ■Material: Stainless steel (SUS304)
- ■Surface treatment: Mirror polishing
- ■Uses: Combined freezers, walk-in freezers, walk-in test chambers, etc.
- ■Note: Can be used with TM-622 Seat can be equipped with high seat (TH-903-1) and low seat (TH-903-2).

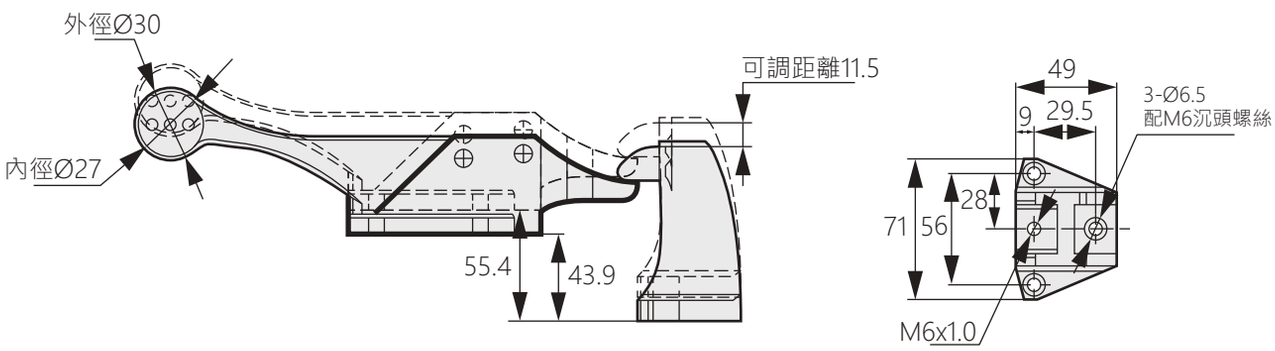

[TH-903-1]

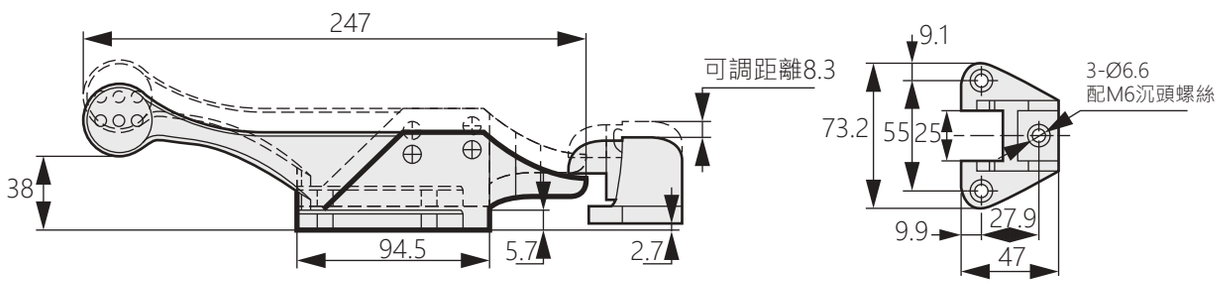

[TH-903-2]

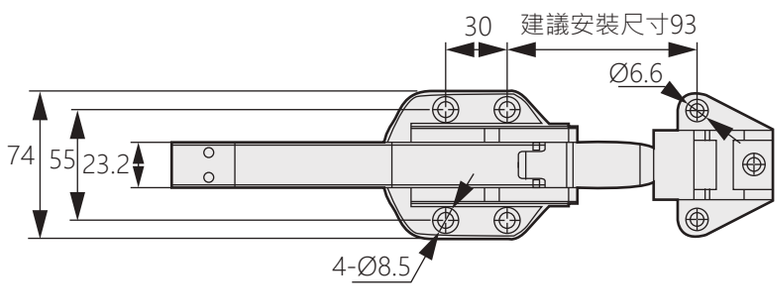

商品型號	樣式
TH-903-1	高座
TH-903-2	矮座

連桿式三點鎖

Link type three point lock

TM-387



商品介紹:

- 通過調節座子可實現密閉壓縮門功能
- 上推開門，下拉關門
- 材質:不鏽鋼（SUS304）
- 表面處理:鏡面拋光
- 用途:大形有密閉要求的設備、如大形高底溫試驗箱、冷庫等
- 備註:1.配兩個鎖桿固定座(TM-387-1,TM-387-2選配其中一種)和保持架TM-387-3
  2.需自配不鏽鋼方鋼

Product description:

- Closed compression door function can be achieved by adjusting the seat.
- Push up to open the door, pull down to close the door
- Material: Stainless steel (SUS304)
- Surface treatment: Mirror polishing
- Uses: Large-scale equipment with sealing requirements, such as large-scale high-bottom temperature test chambers, cold storage, etc.
- Note: 1. Equipped with two lock lever fixing seats (TM-387-1, TM-387-2 optional one Species) and cage TM-387-3.
  2. Requires self-made stainless steel square steel.

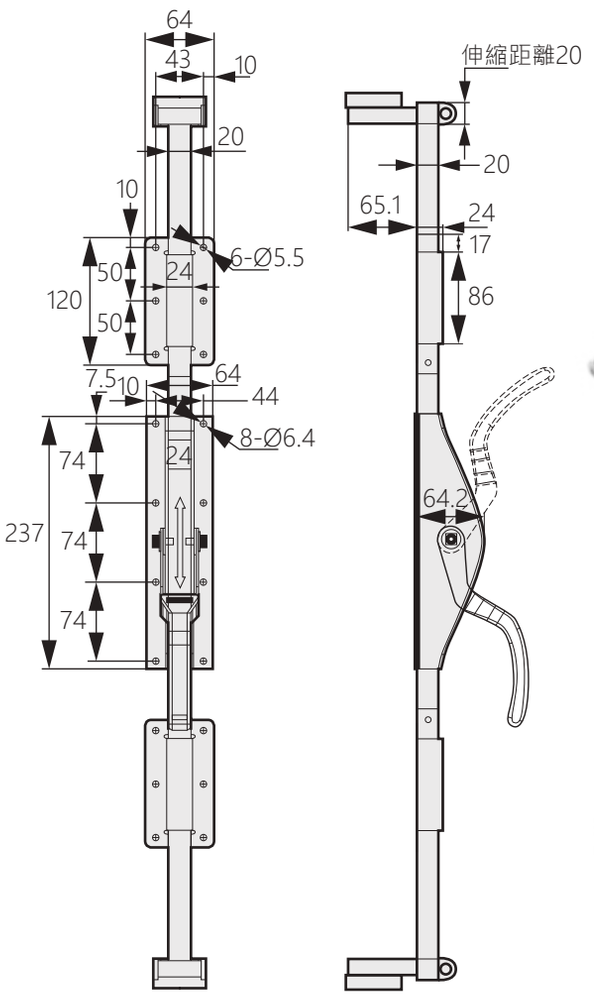



〔TM-387-1〕

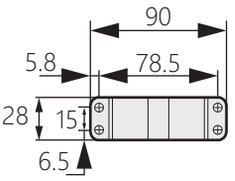

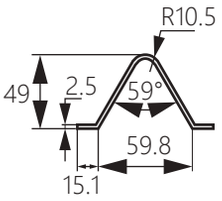



〔TM-387-2〕

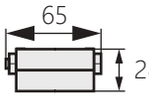

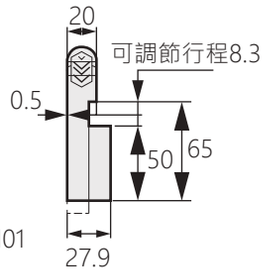

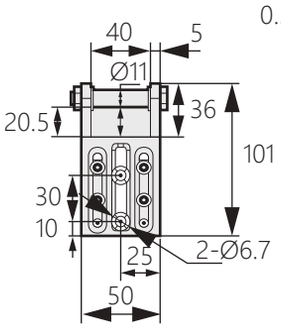



〔TM-387-3〕

安裝示意圖





商品型號	品名	內含數量
TM-387-1	固定座	2
TM-387-2	固定座	2
TM-387-3	保持架	2

大型貨櫃車廂鎖

Large container locks

TM-1593



商品介紹:

- ■把手通過連接鋼管控制兩端鎖點
- ■具有強力迫緊功能
- ■材質:不鏽鋼SUS304
- ■表面處理:鏡面拋光
- ■用途:特種車廂、大型貨櫃車、組合大型式冷藏庫等
- ■備註:有大小兩種鉤子(TH-1593-1,TH-1593-2)提供選擇

Product description:

- ■The handle controls the locking points on both ends by connecting steel pipes.
- ■With strong pressing function
- ■Material: Stainless steel (SUS304)
- ■Surface treatment: Mirror polishing
- ■Uses: Special cars, large container trucks, combined large-scale refrigerators, etc.
- ■Note: Available in two sizes (TH-1593-1, TH-1593-2)

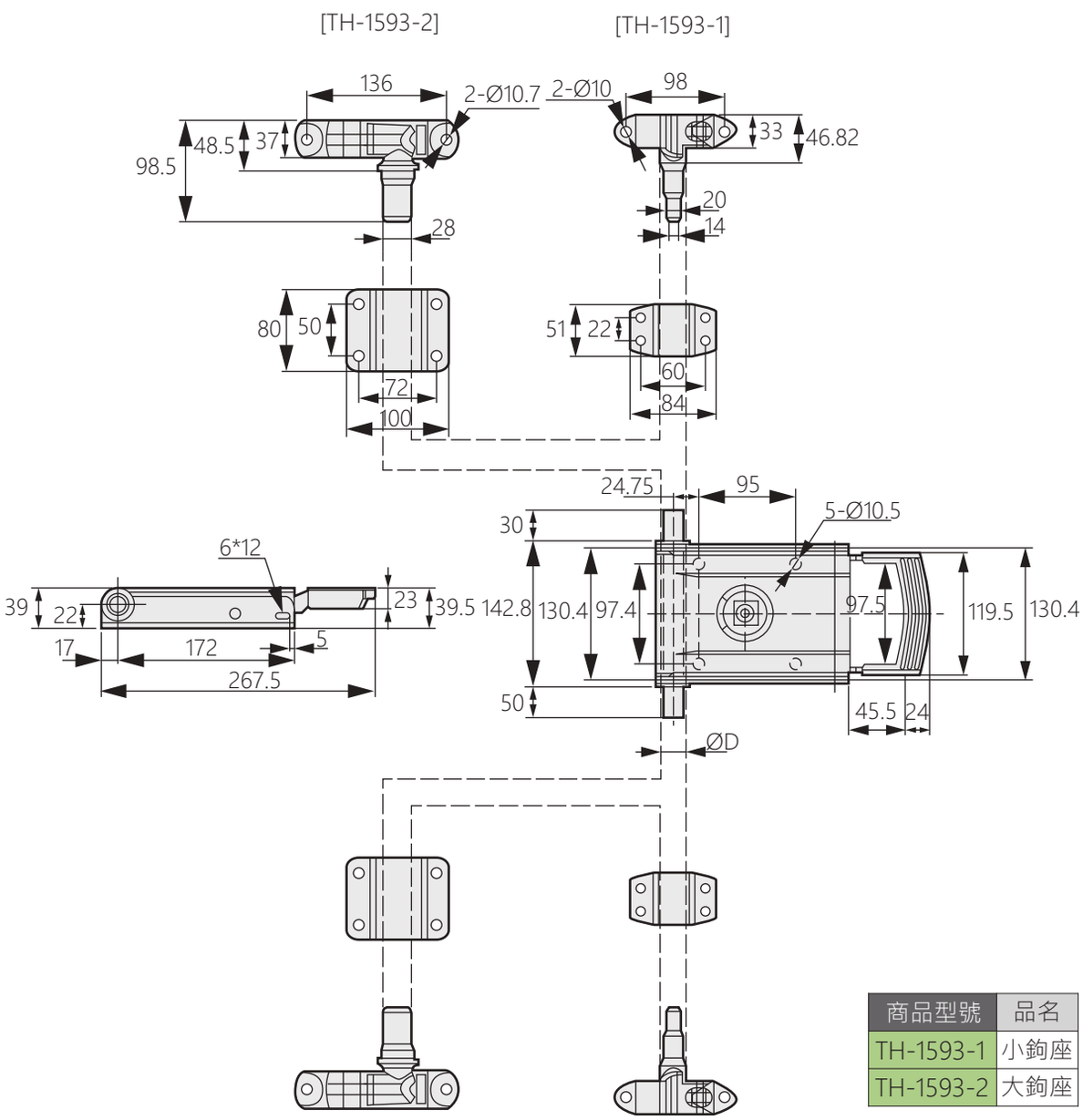

商品型號	品名
TH-1593-1	小鉤座
TH-1593-2	大鉤座

滾輪迫緊式把手

Roller pressing handle

TM-837



商品介紹:

- ■內外開門兼用
- ■具有強力迫緊功能
- ■材質:不鏽鋼SUS304
- ■表面處理:鏡面拋光
- ■用途:大型冷庫、步入式試驗箱、隔音箱等大型有密閉需求的門

Product description:

- ■Open both inside and outside
- ■With strong pressing function
- ■Material: Stainless steel (SUS304)
- ■Surface treatment: Mirror polishing
- ■Uses: Large-scale cold storage, walk-in test box, soundproof box and other large doors with closed requirements.

商品型號	樣式
TM-837-L	左開
TM-837-R	右開

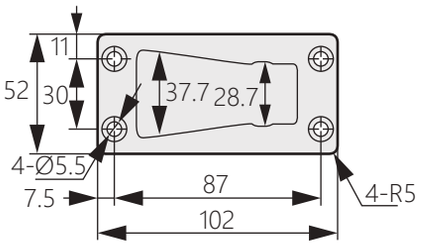

滑塊座

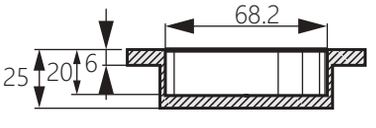

截面A-A

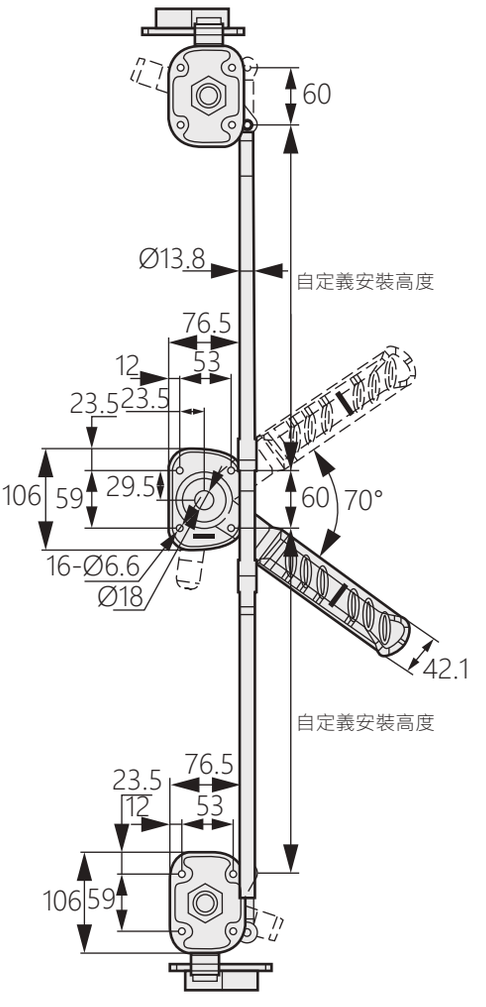

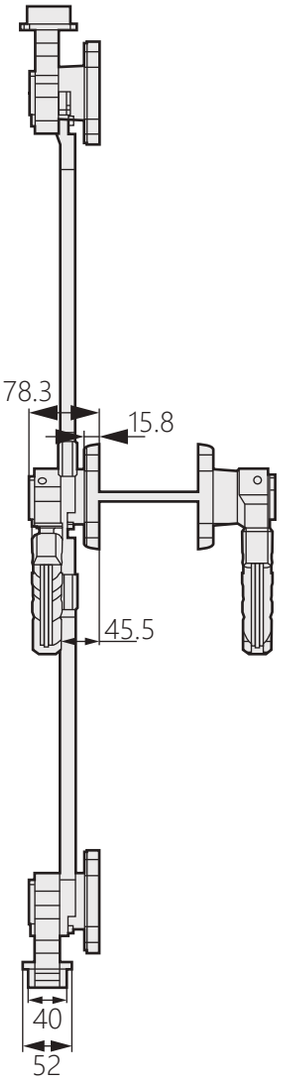

滾輪迫緊式把手

Roller pressing handle

TM-8361



商品介紹:

- ■內外開門兼用
- ■具有強力迫緊功能
- ■材質:不鏽鋼SUS304
- ■表面處理:鏡面拋光
- ■用途:大型冷庫、步入式試驗箱、隔音箱等大型有密閉需求的門
- ■備註:有平門和凸門兩種安裝座子(TH-8361-1, TH-8361-2)可選

Product description:

- ■Open both inside and outside
- ■With strong pressing function
- ■Material: Stainless steel (SUS304)
- ■Surface treatment: Mirror polishing
- ■Uses: Large-scale cold storage, walk-in test box, soundproof box and other large doors with closed requirements.
- ■Note: Available with flat door and convex door (TH-8361-1, TH-8361-2)

商品型號	品名	數量
TH-8361-1	滑塊座	3
TH-8361-2	滑塊座	3

商品型號	樣式
TM-8361-L	左開
TM-8361-R	右開

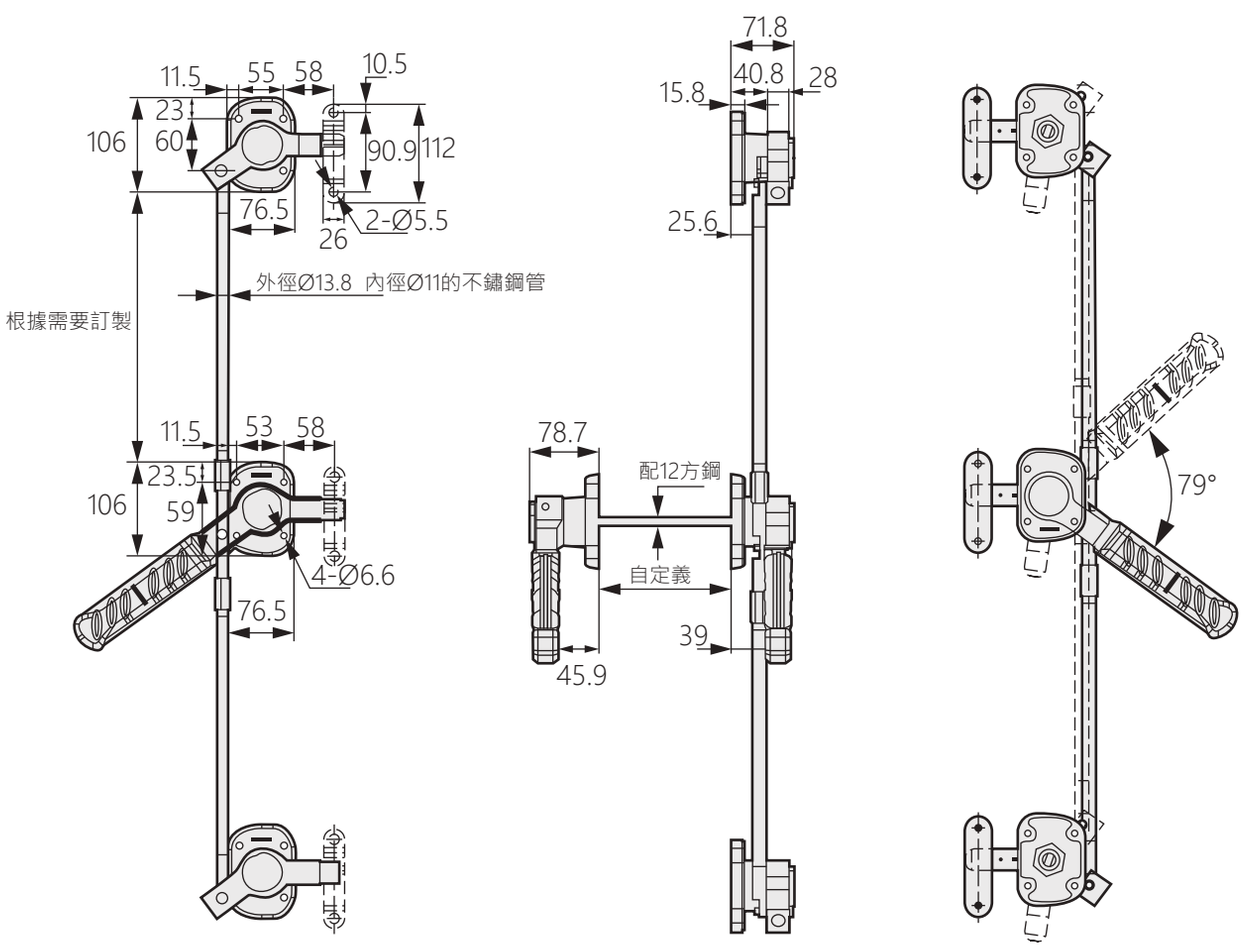

滾輪迫緊式把手

TM-8361

Roller pressing handle



TM-8361-1

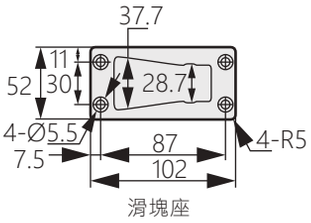

滑塊座



TM-8361-2

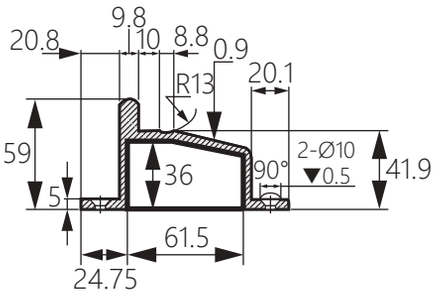

截面A-A

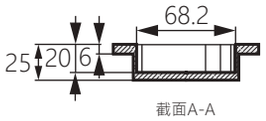

截面A-A

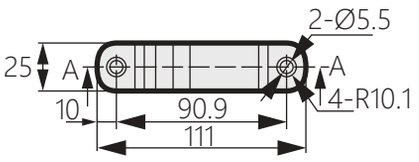

滑塊座

高端防震門鎖

TM-0440

High-end shockproof door lock



商品介紹:

- 採用柔和的圓弧設計
- 單觸操作即可開閉
- 為了提高防塵性能，鑰匙孔處安裝有防塵蓋
- 材質:鋅合金
- 表面處理:珍珠鉻、黑色烤漆
- 用途:工程車、特種車、建築機械、震動設備
- 備註:由於插銷與手柄聯動，從而可以確認門是否完全關閉

Product description:

- With soft arc design
- One-touch operation to open and close
- In order to improve the dustproof performance, a dust cover is installed at the keyhole.
- Material: Zinc alloy
- Surface treatment: Pearl chrome, black paint
- Uses: Engineering vehicles, special vehicles, construction machinery, vibration equipment.
- Note: The latch is linked with the handle, so you can confirm whether the door is completely closed.

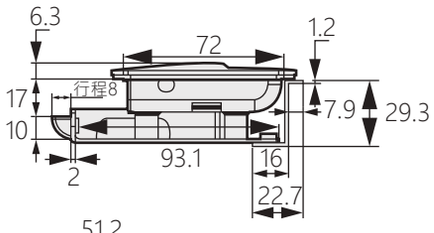

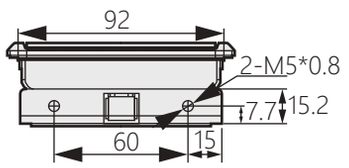

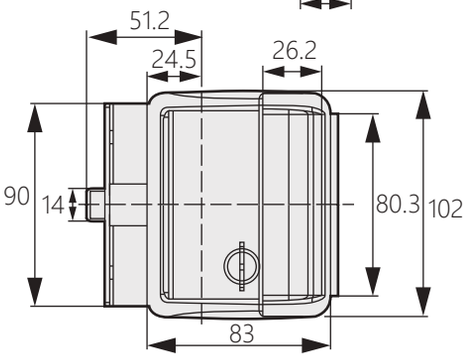

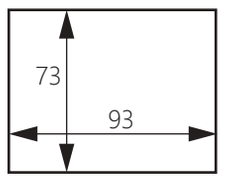

開孔尺寸

商品型號	品名
TM-0440W	珍珠鉻
TM-0440B	黑色烤漆

步入式冷藏庫把手

Walk-in refrigerator handle

TM-621

RoHS SUS不鏽鋼 ZDC鋅 CAD



商品介紹:

- 通過連接鋼管，可同步操作大型門的兩處縮點
- 材質:鋅合金、不鏽鋼（SUS304）
- 表面處理:鏡面拋光
- 用途:組合式冷凍冷藏庫、步入式冷凍冷藏庫及步入式實驗箱等
- 備註:座子TM-621-2可配高座TH-A-90.TH-S-90或者矮座TH-A-46,座子TM-621-1可配高座TH-S-90.TH-S-90W或者矮座TH-S-46不鏽鋼管需要自配

Product description:

- By connecting steel pipes, two shrink points of large doors can be operated simultaneously.
- Material: Zinc alloy, Stainless steel
- Surface treatment: Bright chrome plating, Mirror polishing
- Uses: Combined freezers, walk-in freezers, walk-in experiment boxes, etc.
- Note: The seat TM-621-2 can be equipped with high seat TH-A-90.TH-S-90 or low seat TH-A-46.The seat TM-621-1 can be equipped with high seat TH-S-90. TH-S-90W or low seat TH-S-46..Stainless steel pipes need to be equipped.

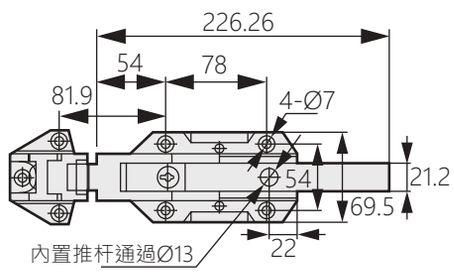



商品型號	材質
TM-621-1	不鏽鋼
TM-621-2	鋅合金

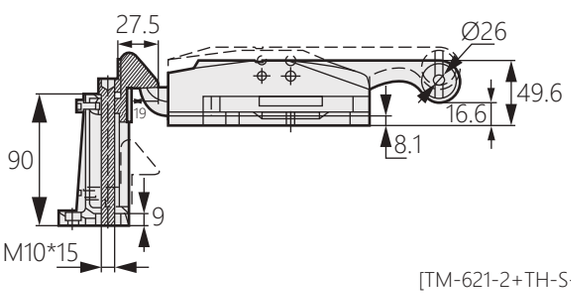

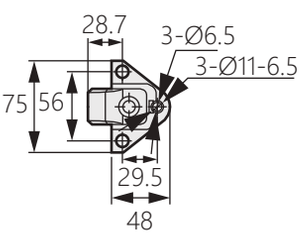

TH-S-90

[TM-621-2+TH-S-90]



TH-A-90
TH-S-90
TH-S-90W



TH-A-46
TH-S-46

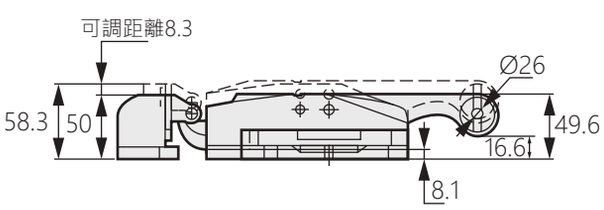

[TM-621-2+TH-A-46]

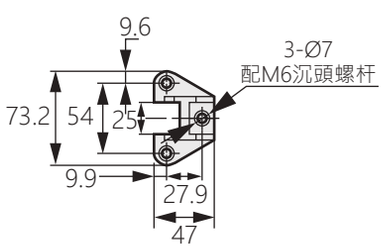

TH-A-46

商品型號	材質
TH-A-90	鋅合金
TH-S-90W	不鏽鋼
TH-S-90	不鏽鋼
TH-A-46	鋅合金
TH-S-46	不鏽鋼

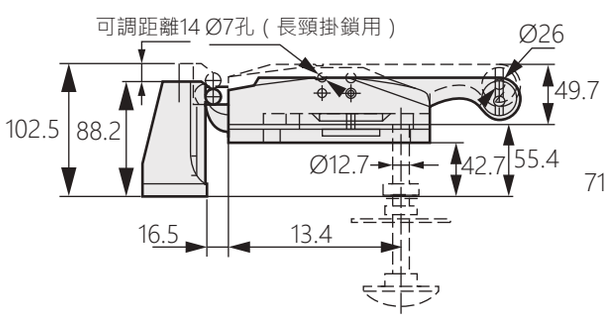

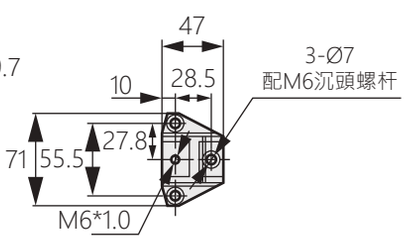

TH-A-90

[TM-621-2+TH-A-90]

步入式冷藏庫把手

Walk-in refrigerator handle

TM-621

RoHS SUS不鏽鋼 ZDC鋅 CAD

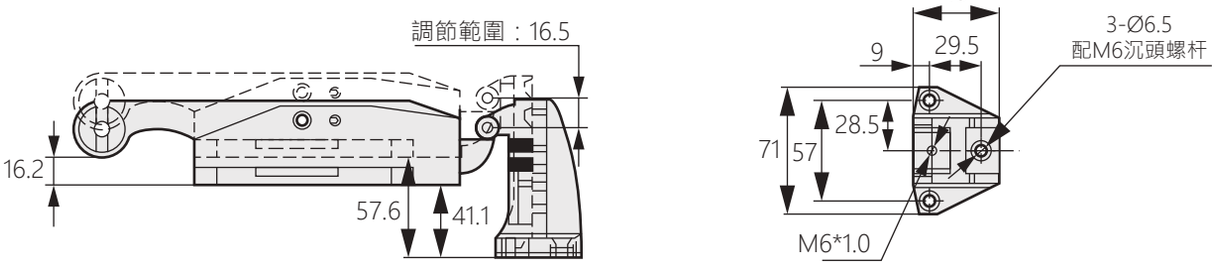

TH-S-90

[TM-621-1+TH-S-90]

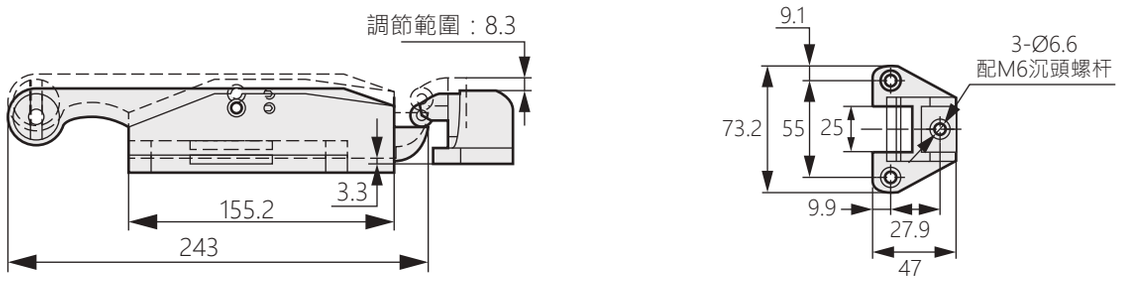

TH-S-46

[TM-621-1+TH-S-46]

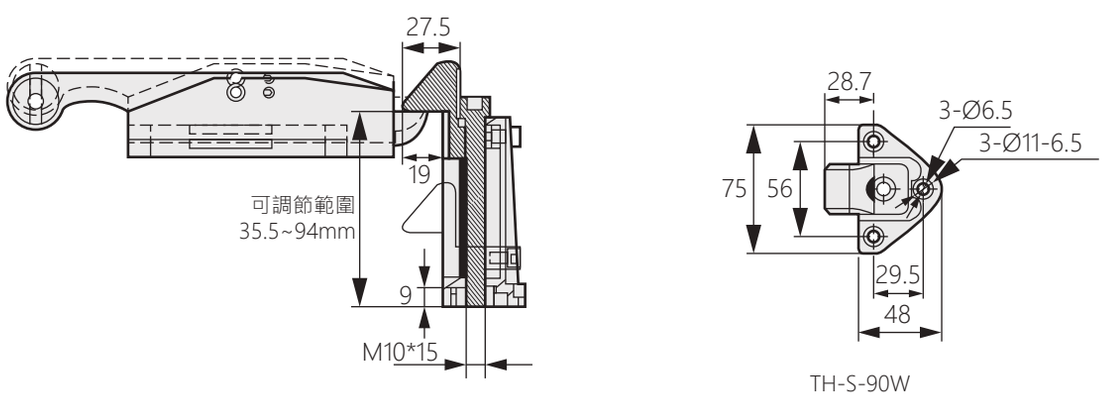

TH-S-90W

[TM-621-1+TH-S-90W]

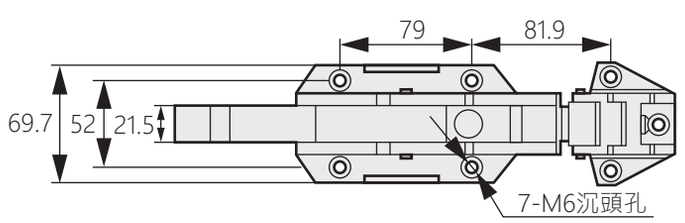

步入式冷藏庫把手

Walk-in refrigerator handle

TM-622

RoHS SUS不鏽鋼 CAD

商品介紹:

- 通過連接鋼管，可同步操作大型門的兩處縮點
- 材質:不鏽鋼（SUS304）
- 表面處理:鏡面拋光
- 用途:組合式冷凍冷藏庫、步入式冷凍冷藏庫及步入式實驗箱等

Product description:

- By connecting steel pipes, two shrink points of large doors can be operated simultaneously.
- Material: Stainless steel 304
- Surface treatment: Bright chrome plating, Mirror polishing
- Uses: Combined freezers, walk-in freezers, walk-in experiment boxes, etc.



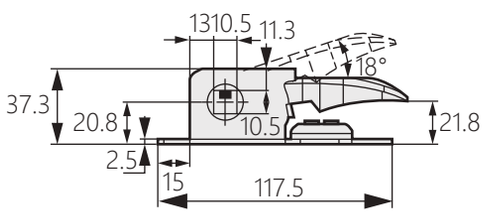

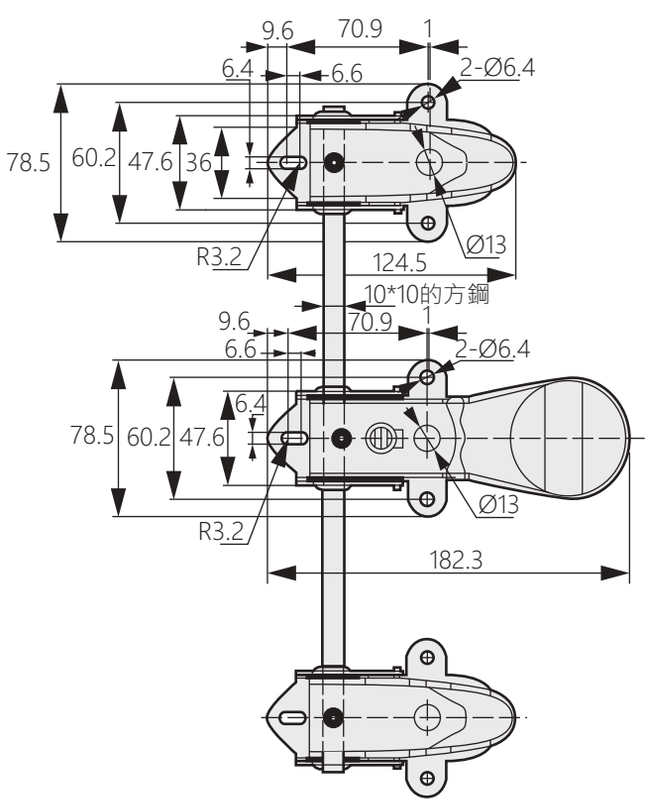

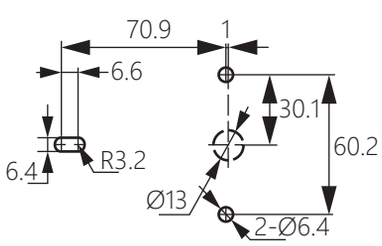

開孔尺寸

步入式冷藏庫把手

Walk-in refrigerator handle

TM-623



商品介紹:

- 通過連接鋼管，可同步操作大型門的兩處縮點
- 材質:不鏽鋼（SUS304）
- 表面處理:鏡面拋光
- 用途:組合式冷凍冷藏庫、步入式冷凍冷藏庫及步入式實驗箱等

Product description:

- By connecting steel pipes, two shrink points of large doors can be operated simultaneously.
- Material: Stainless steel 304
- Surface treatment: Bright chrome plating, Mirror polishing
- Uses: Combined freezers, walk-in freezers, walk-in experiment boxes, etc.

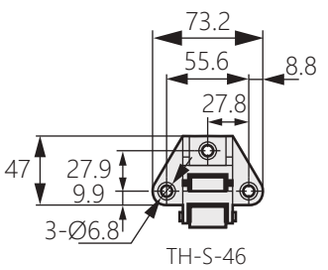

TH-S-46

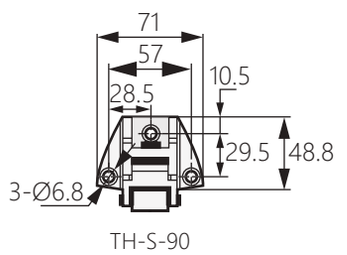

TH-S-90

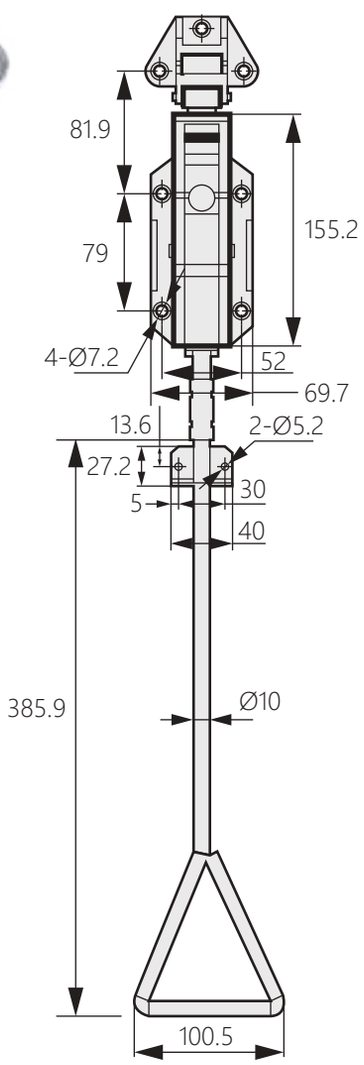

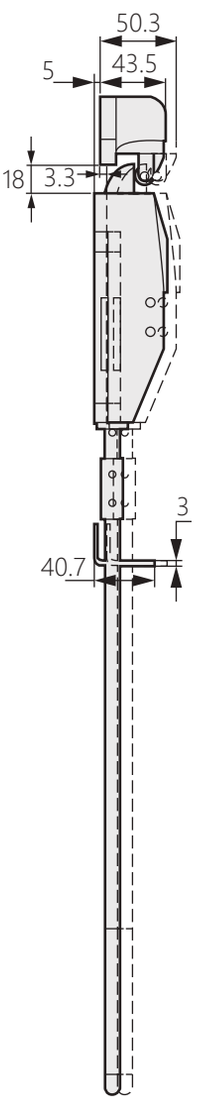

[TM-623+TH-S-46]

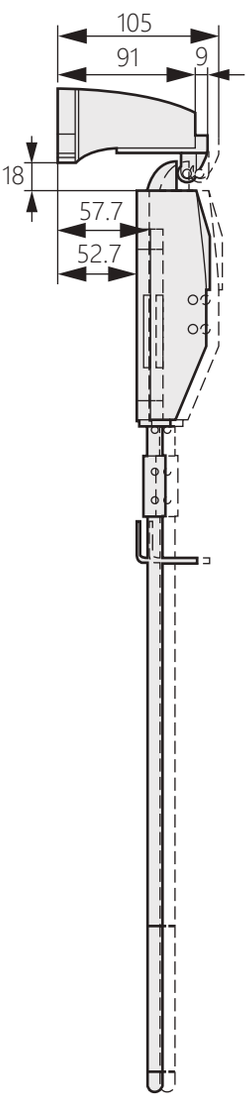

[TM-623+TH-S-90]

高溫烤箱把手鎖

TM-6189

High temperature oven handle lock



商品介紹:

- 側門安裝
- 迫緊舌可調節，有高矮選配，調節高度範圍在14.8～30之間
- 材質:鋅合金
- 表面處理:電鍍亮鉻
- 用途:生物醫療箱、高溫烤箱、低溫冷藏醫療設備、環境試驗設備

Product description:

- Side door installation
- The tight tongue can be adjusted, there is a height option, the height range is between 14.8 ～ 30
- Material: Zinc alloy
- Surface treatment: Bright chrome plating
- Uses: Biological medical box, high temperature oven, low temperature refrigerated medical equipment, environmental test equipment.

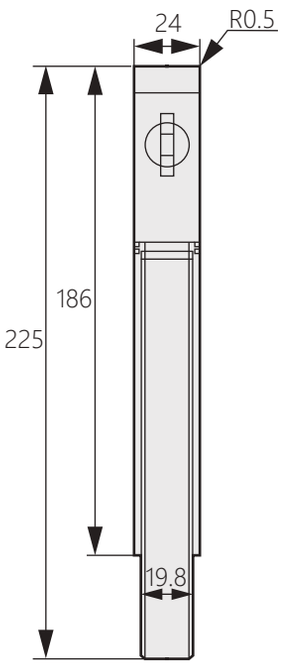

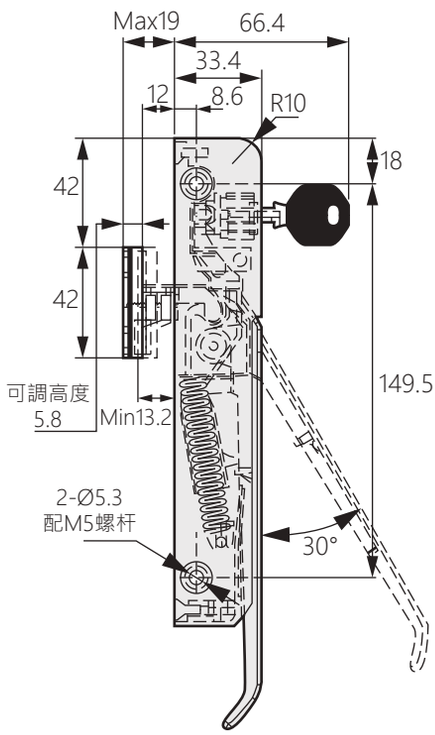

商品型號	樣式
TM-6189	把手
TH-6189-1	高座
TH-6189-2	矮座

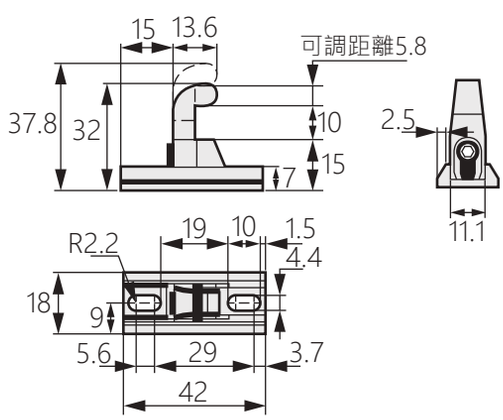

TH-6189-1
高座尺寸圖

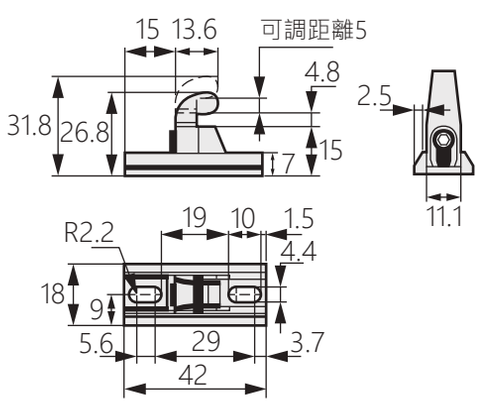

TH-6189-2
矮座尺寸圖

拉動式門鎖

TM-0412

Pull-type door lock



商品介紹:
- ■具有密封防水功能
- ■可強力拼裝部件，拆卸方便
- ■即使有震動，也可確保拼裝部件成一體
- ■材質:冷軋鋼板（SPCC）
- ■表面處理:鍍藍鋅
- ■用途:LED顯示屏、電子設備、大型屏幕拼接

Product description:
- ■With sealed waterproof function
- ■Can be strongly assembled for easy disassembly
- ■Ensuring assembly of parts even if there is vibration
- ■Material: Cold rolled steel plate (SPCC)
- ■Surface treatment: Blue zinc plating
- ■Uses: LED display, electronic equipment, large screen splicing.

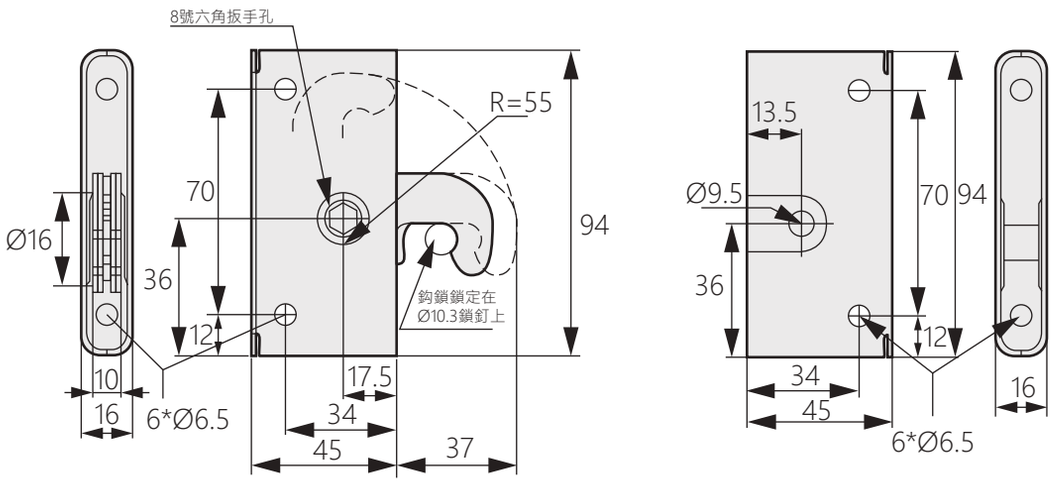

高鐵廚房把手

TM-0318

High-speed rail kitchen handle



商品介紹:
- ■密閉及迫緊性能強，安裝方便
- ■帶鎖芯鎖定，安裝孔帶膠塞
- ■迫緊座子高度可調節
- ■材質:鋅合金
- ■表面處理:鍍亮鉻
- ■用途:火車、動力箱體設備、烤箱、試驗箱

Product description:
- ■Closed and tight performance, easy installation
- ■With lock cylinder lock, rubber plug for mounting hole
- ■Adjustable seat height
- ■Material: Zinc alloy
- ■Surface treatment: Bright chrome plating
- ■Uses: Train, power box equipment, oven, test box.

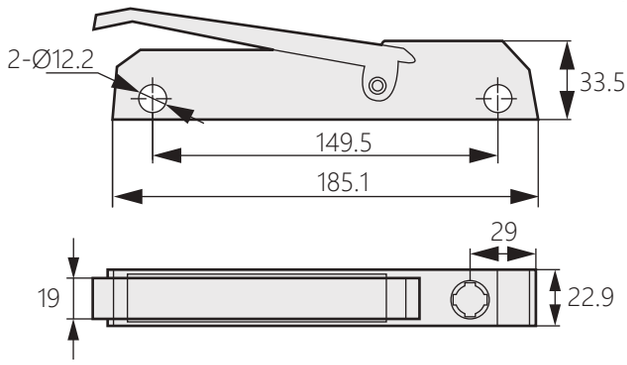

按鈕式把手

TM-108

Push button handle



商品介紹:

- ■座子高度可以調節
- ■撞擊關門，按壓式開門，開關簡易
- ■材質:鋅合金
- ■表面處理:珍珠鉻
- ■用途:藥品穩定箱、恆溫試驗箱、醫療設備等
- ■備註:座子高度可以調節

Product description:

- ■Seat height can be adjusted
- ■Shock door closing, push door opening, easy opening and closing.
- ■Material: Zinc alloy
- ■Surface treatment: Pearl chrome
- ■Uses: Drug stabilization box, constant temperature test box, medical equipment, etc.
- ■Note: The height of the seat can be adjusted.

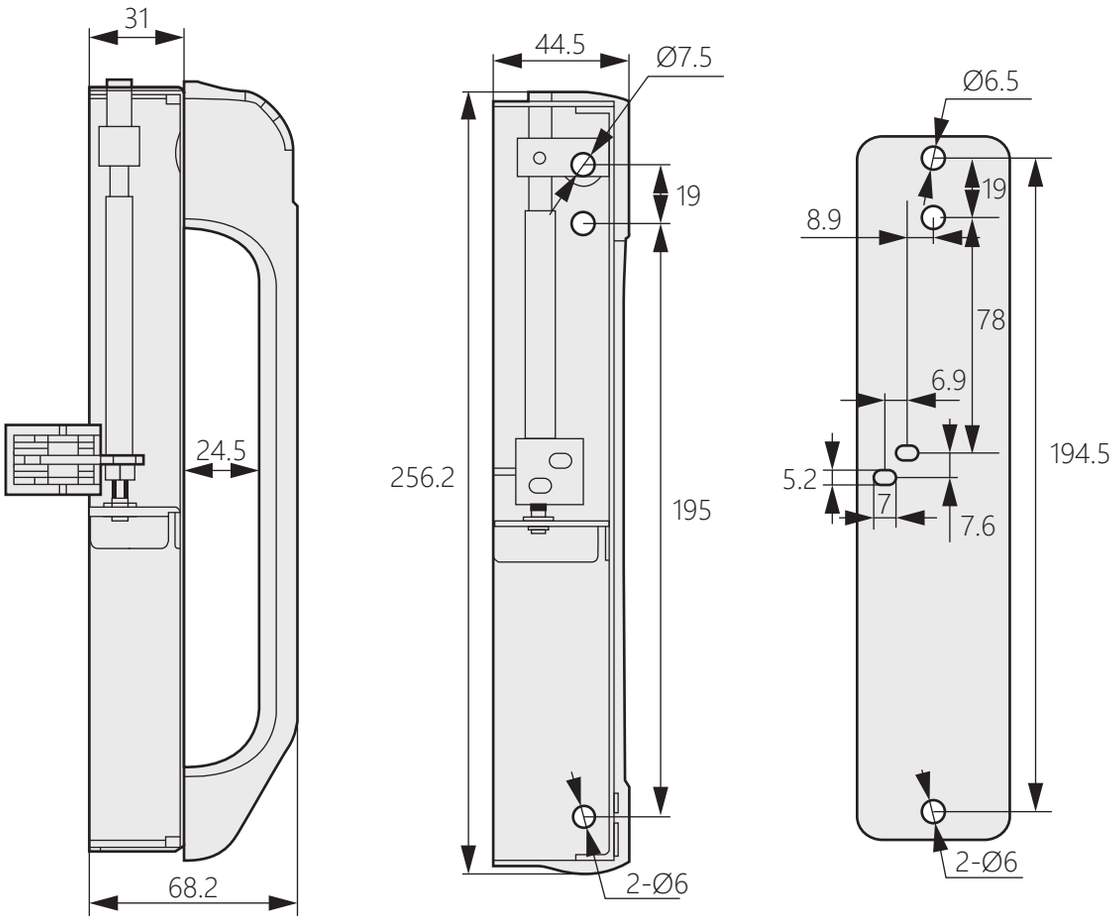

安裝示意圖



商品型號	樣式
TM-108-L	左開
TM-108-R	右開

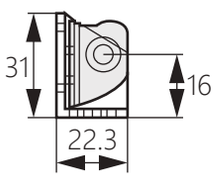

座子調節範圍：16-22mm

按鈕式把手

Push button handle

TM-232



商品介紹:

- ■座子高度可以調節
- ■撞擊關門，按壓式開門，開關簡易
- ■材質:鋅合金
- ■表面處理:珍珠鉻
- ■用途:藥品穩定箱、恆溫試驗箱、醫療設備等
- ■備註:座子高度可以調節

Product description:

- ■Seat height can be adjusted
- ■Shock door closing, push door opening, easy opening and closing.
- ■Material: Zinc alloy
- ■Surface treatment: Pearl chrome
- ■Uses: Drug stabilization box, constant temperature test box, medical equipment, etc.
- ■Note: The height of the seat can be adjusted.

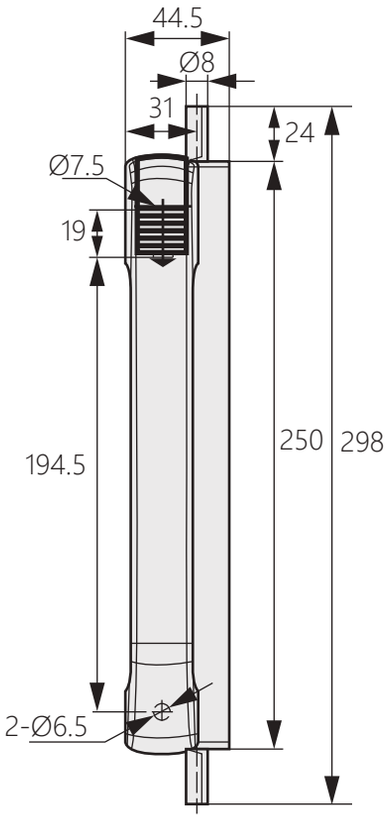

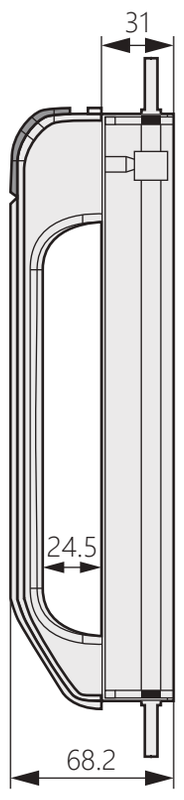

鉤鎖

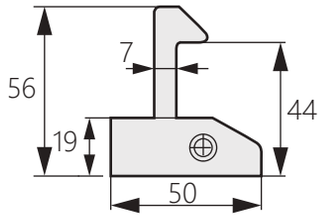



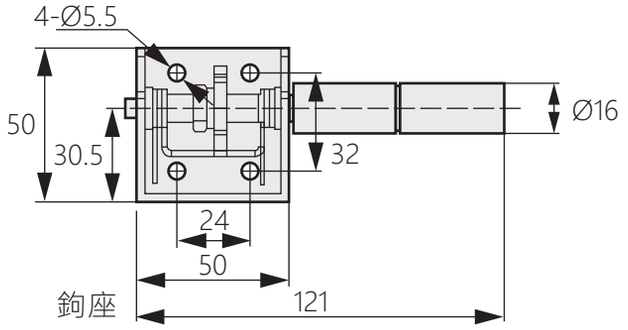

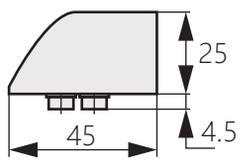

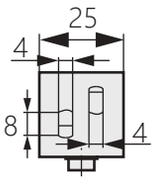

商品型號	樣式
TM-232-L	左開
TM-232-R	右開

L型把手鎖

TM-094

L-shaped handle lock



商品介紹:

- 具有良好的迫緊鎖定功能
- 可加裝掛鎖，起防盜功能
- 材質:鋅合金
- 表面處理:黑色烤漆
- 用途:機箱機櫃、配電箱、製造設備
- 備註:可用於戶外通信機櫃

Product description:

- With good pressing lock function
- Can be installed with padlock for anti-theft function.
- Material: Zinc alloy
- Surface treatment: Black paint
- Uses: Chassis cabinets, distribution boxes, manufacturing equipment.
- Note: Can be used in outdoor communication cabinets.

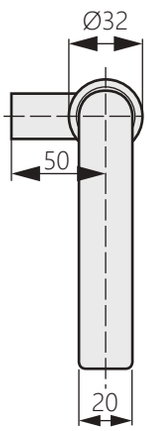

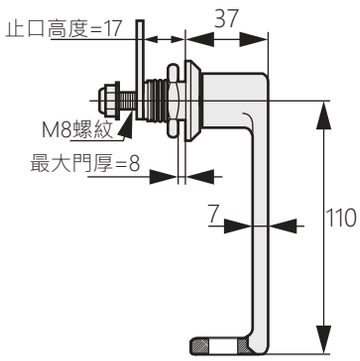

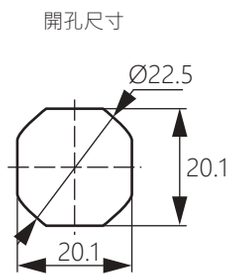

提桿拉緊鎖

TM-081

Lift lever lock



商品介紹:

- 具有伸縮迫緊功能
- 調整鎖片可適合不同門板厚度
- 材質:鋅合金、冷軋板（SPCC）
- 表面處理:鍍亮鉻
- 用途:機箱機櫃、配電箱、電櫃
- 備註:該鎖具有良好的迫緊功能，開、閉回饋良好

Product description:

- With telescopic pressing function
- Adjust the lock piece to suit different door thickness Left and right.
- Material: Zinc alloy, cold rolled sheet (SPCC)
- Surface treatment: Bright chrome plating
- Uses: Chassis cabinets, distribution boxes, electrical cabinets.
- Note: The lock has a good pressing function, and the opening and closing feedback is good.

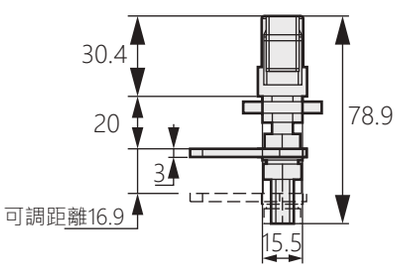

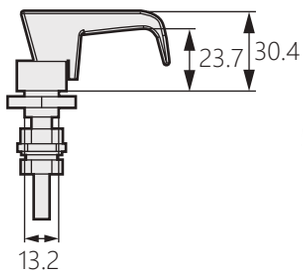

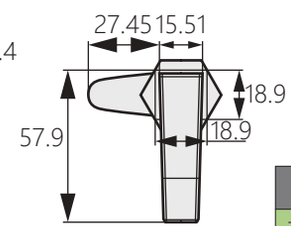

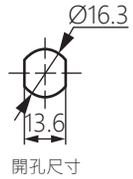

商品型號	表面顏色
TM-081B	黑色
TM-081W	銀色

L型手柄鎖 TM-113

L-shaped handle lock



商品介紹:
- ■鎖芯在開啟和關閉的兩種狀態下鎖定
- ■方便旋轉操作的橫向突出結構設計
- ■材質:鋅合金
- ■表面處理:鍍亮鉻
- ■用途:烤箱、試驗箱、恆溫恆濕箱等

Product description:
- ■Lock cylinder locks in both open and closed states.
- ■Design of lateral protruding structure for convenient rotation operation.
- ■Material: Zinc alloy
- ■Surface treatment: Bright chrome plating
- ■Uses: Oven, test box, constant temperature and humidity box, etc.

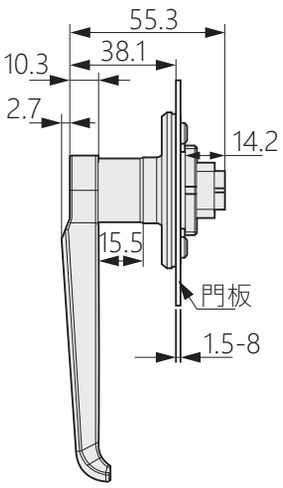

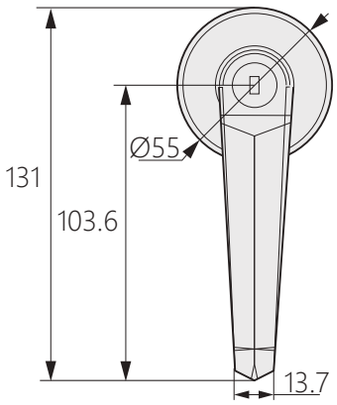

開孔尺寸

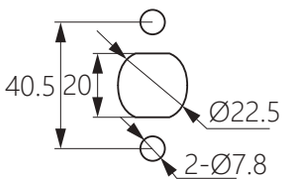

L型安全工業門鎖 TM-114

L-shaped safety industrial door lock



商品介紹:
- ■有帶鑰匙、不帶鑰匙和帶掛鎖等型號
- ■材質:鋅合金
- ■表面處理:鍍亮鉻
- ■用途:箱體、配電盤、車輛門板等
- ■備註:具有良好的迫緊功能，開、閉時回饋良好

Product description:
- ■Available in keyed, non-keyed and with padlock models.
- ■Material: Zinc alloy
- ■Surface treatment: Bright chrome plating
- ■Uses: Box, switchboard, vehicle door panel, etc.
- ■Note: With good pressing function, good feedback during opening and closing.

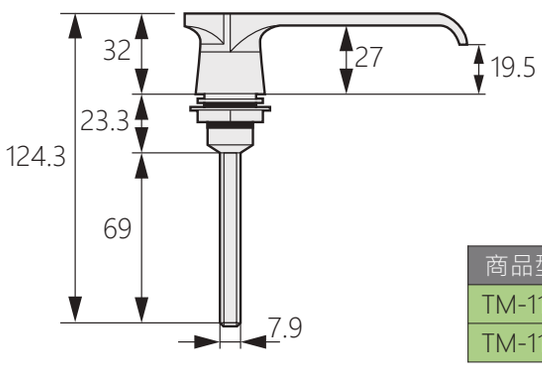

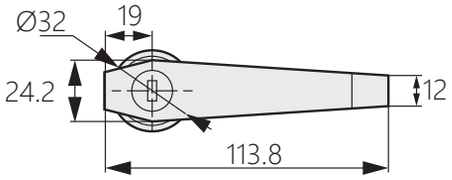

開孔尺寸

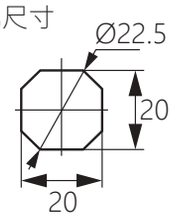

商品型號	樣式
TM-114-1	有鎖芯
TM-114-2	無鎖芯

二次開防燙把手 TM-117

Anti-scalding handle



商品介紹:
- ■旋轉T型把手即可開門
- ■材質:鋅合金
- ■表面處理:鍍亮鉻
- ■用途:箱體、配電盤、車輛門板

Product description:
- ■Turn the T-handle to open the door
- ■Material: Zinc alloy
- ■Surface treatment: Bright chrome plating
- ■Uses: Box, switchboard, vehicle door panel.

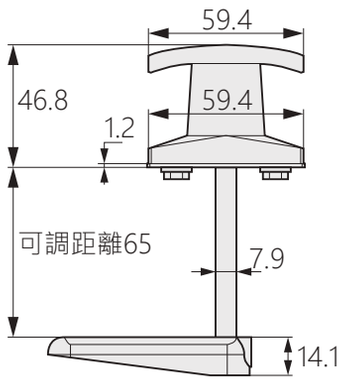

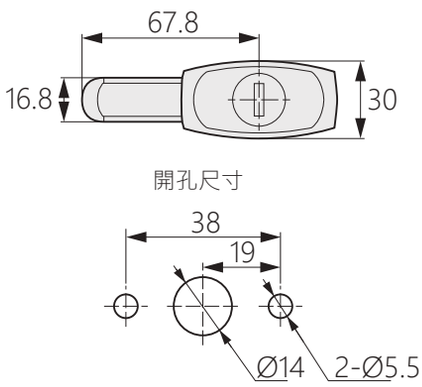

商品型號	樣式
TM-117-1	有鎖芯
TM-117-2	無鎖芯

L旋轉洩壓門把手 TM-116

Rotary pressure relief door handle



商品介紹:
- ■旋轉T型把手即可開門
- ■材質:鋅合金
- ■表面處理:鍍亮鉻
- ■用途:電力箱、控制箱、自動化設備

Product description:
- ■Turn the T-handle to open the door
- ■Material: Zinc alloy
- ■Surface treatment: Bright chrome plating
- ■Uses: Open both left and right doors.

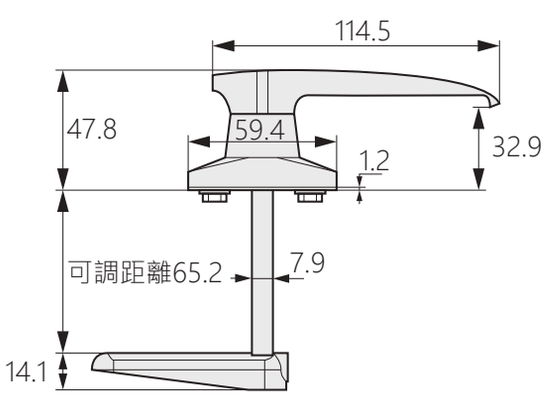

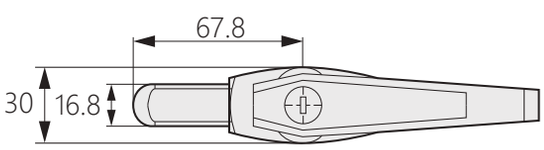

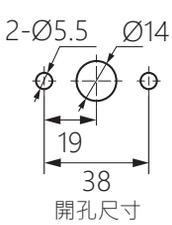

商品型號	樣式
TM-116-1	有鎖芯
TM-116-2	無鎖芯

服務器機櫃鎖

TM-129

Server cabinet lock



商品介紹:

- 鑰匙孔帶防塵蓋
- 材質:不鏽鋼（SUS304）
- 表面處理:拋光拉絲
- 用途:高等電力電力箱、控制箱、自動化設備使用的箱體

Product description:

- Keyhole with dust cover
- Material: Stainless steel (SUS304)
- Surface treatment: Polished and brushed
- Uses: Boxes used in higher power boxes, control boxes, and automation equipment.

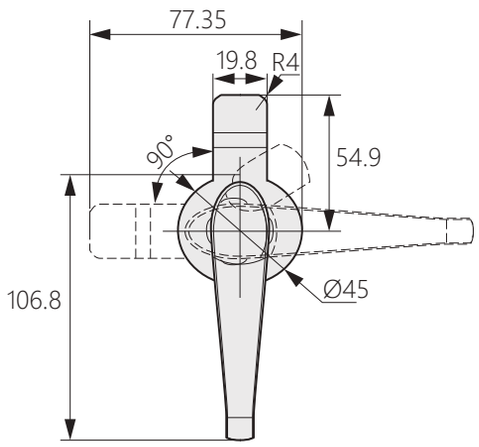

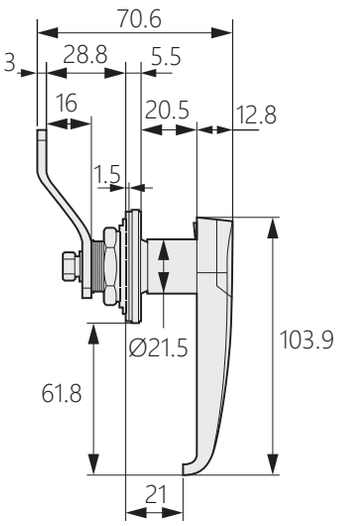

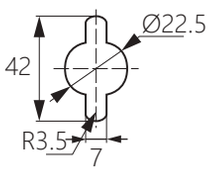

開孔尺寸

不鏽鋼門鎖把手

TM-2119

Stainless Steel Latch



商品介紹:

- 左右開門通用:透過變更門擋片以及基座的方向，即可實現左右開門使用
- 材質:不鏽鋼304脫臘鑄造
- 表面處理:鏡面拋光
- 用途:震動機械之門扇、密封門、電磁波防護門、隔音門、醫療設備

Product description:

- For both left-hand and right-hand use：The left-hand and right-hand use can be changed by reversing the cam and base.
- Material: Cast stainless steel 304
- Surface treatment: Mirror surface buffing
- Uses: Doors of oscillation devices, airtight doors, electromagnetic-waveproof doors, soundproof doors.

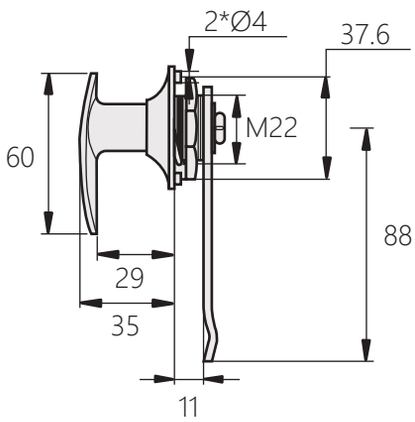

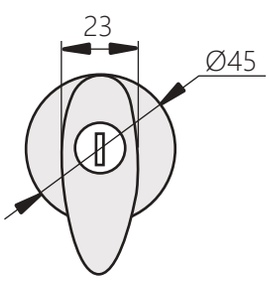

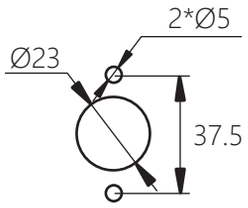

商品型號	規格
TM-2119-1	附鎖
TM-2119-2	無鎖

不鏽鋼防水把手組

TM-2130

Stainless Steel Waterproof Handle



商品介紹:

- 材質:不鏽鋼脫臘鑄造
- 表面處理:鏡面拋光
- 用途:配電盤、電控箱五金

Product description:

- Material: Stainless steel dewaxing casting
- Surface treatment: Mirror polishing
- Uses: Switchboard, electric control box hardware

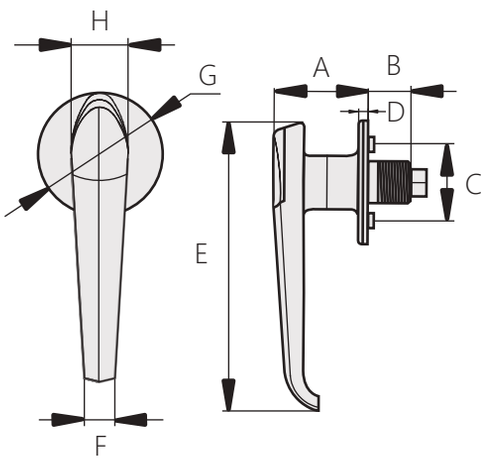

商品型號	規格	E	A	B	H	F	C	G	D
TM-2130-1-1	無鎖	152	49.5	22.5	30	16	40	Ø65	5
TM-2130-2-1	有鎖	152	49.5	22.5	30	16	40	Ø65	5
TM-2130-2-2	有鎖	134	43	15.5	25	14	40	Ø55	4
TM-2130-2-3	有鎖	120	43	15.5	24	14	32	Ø48	4

L型鋅合金防水手柄

TM-105

L-shaped zinc alloy waterproof handle



商品介紹:

- 可供單點、兩點、三點、鎖閉使用
- 材質:鋅合金
- 表面處理:鍍亮鉻
- 用途:控制箱、電力箱、機箱機櫃
- 備註:左右開門兩款，可加掛鎖

Product description:

- Available for single point, two points, three points, locked.
- Material: Zinc alloy
- Surface treatment: Bright chrome plating
- Uses: Control box, power box, Chassis cabinet.
- Note: There are two types of doors that can be opened left and right, and padlocks can be added.

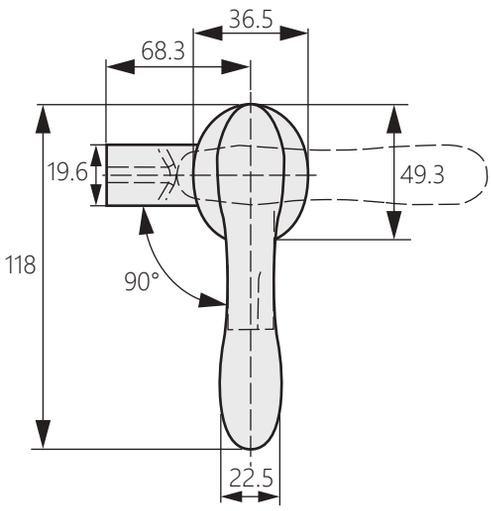

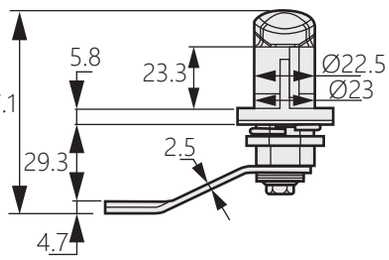

開孔尺寸

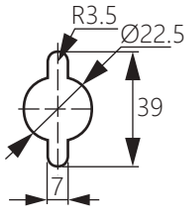

商品型號	樣式
TM-105-L	左開
TM-105-R	右開

T型防水把手

TM-2139

T type waterproof handle



商品介紹:

- 材質:不鏽鋼316脫臘鑄造
- 表面處理:鏡面拋光
- 用途:半導體工程、工業工程、五金用控制箱、機械門鎖、電控箱

Product description:

- Material: Stainless steel316 dewaxing casting
- Surface treatment: Mirror polishing
- Uses: Semiconductor engineering, industrial engineering, hardware control box, Mechanical door lock, electric control box.

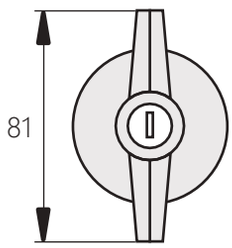

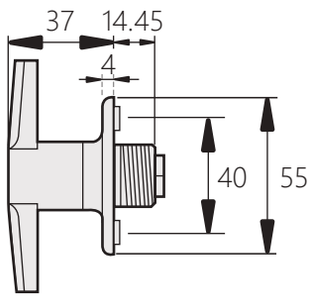

J型門鎖

TM-2140

J type door lock



商品介紹:

- 材質:不鏽鋼316脫臘鑄造
- 表面處理:鏡面拋光
- 用途:配電盤、電控箱五金用

Product description:

- Material: Stainless steel 316 dewaxing casting
- Surface treatment: Mirror polishing
- Uses: Switchboard, electric control box hardware.

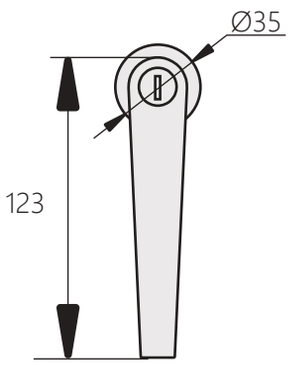

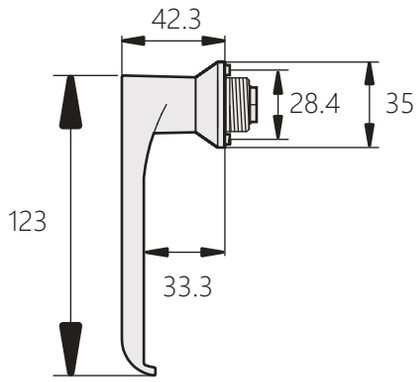

商品型號	規格
TM-2140-1	附鎖
TM-2140-2	無鎖

防水把手鎖

TM-3240

Waterproof handle latch



商品介紹:

- 防水設計:內部設置 O 型環，外部使用防水墊片。左右開門通用:透過變更門擋片方向，即可實現左右開門使用
- 材質:鋅合金(ZDC)
- 表面處理:黑色烤漆
- 適用板厚:1~6mm
- 用途:配分電盤、控制盤 (箱)、機械設備

Product description:

- Waterproof: Using O-ring inside and sheet packing. For both left-hand and right-hand use:The left-hand and right-hand use can be changed by reversing the cam.
- Material: Zinc Alloy (ZDC)
- Surface treatment: Black paint
- Applicable plate thickness: 1~6mm
- Uses: Distribution board, control panel (box), mechanical equipment.

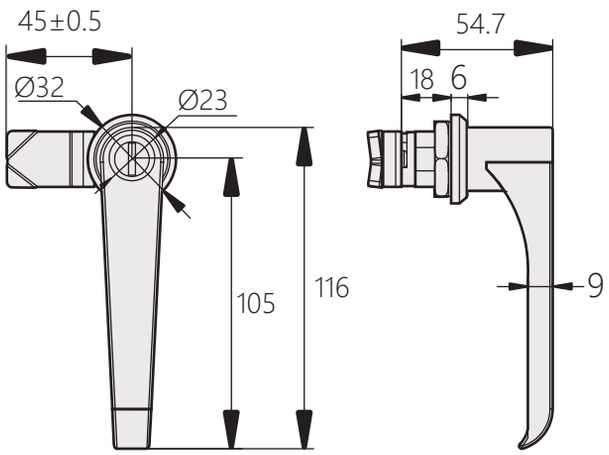

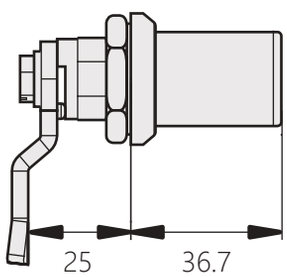

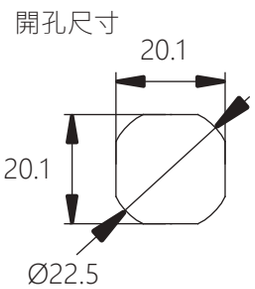

不鏽鋼密閉式手柄

TM-160

Stainless Steel Air Tightness Handle



商品介紹:

- 可強力密閉，具有良好的耐腐蝕性
- 材質:不鏽鋼脫臘鑄造SUS304
- 用途:震動機械之門扇、密封門、電磁波防護門、隔音門
- 備註:可訂製拋光製品

Product description:

- Powerful airtight closure is provided
- Corrosion-resistant stainless steel is used
- Material: Cast stainless steel (SUS304)
- Uses: Automation equipment, medical equipment, ships
- Can customize polished product

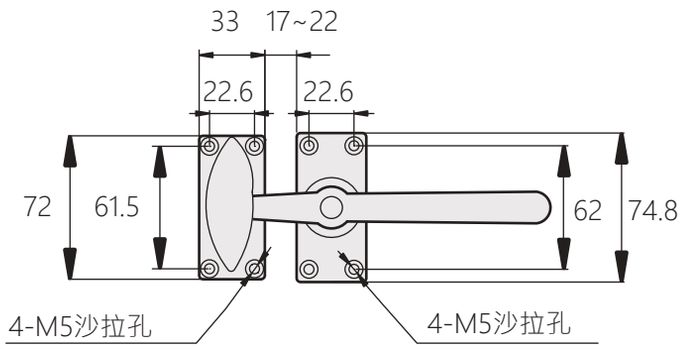

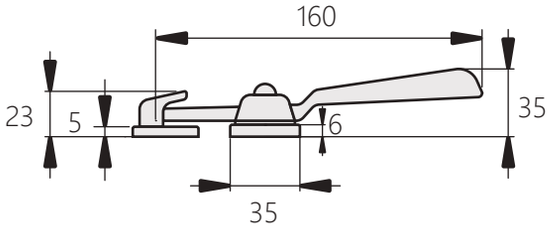

不鏽鋼密閉式手柄

TM-52

Stainless steel lever latch



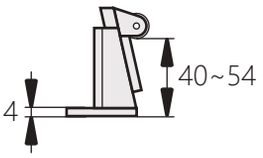

[TM-52-1扣座]

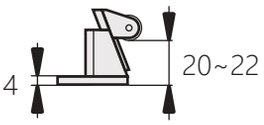

[TM-52-2扣座]

商品介紹:

- 結構牢固，即使激烈的啟閉也安然如故，採用不鏽鋼材質，耐腐蝕性能優異
- 材質:不鏽鋼脫臘鑄造 SUS304
- 表面處理:震動研磨
- 用途:震動機械之門扇、密封門、電磁波防護門、隔音門
- 備註:可訂製拋光製品

Product description:

- Durable construction for hard use of door locking/ unlocking. Corrosion-resistant stainless steel is used.
- Material: Cast stainless steel (SUS304)
- Surface treatment: Vibration ground
- Uses: Doors of oscillation devices, airtight doors, electromagnetic-waveproof doors, soundproof doors.
- Note: Can customize polished product

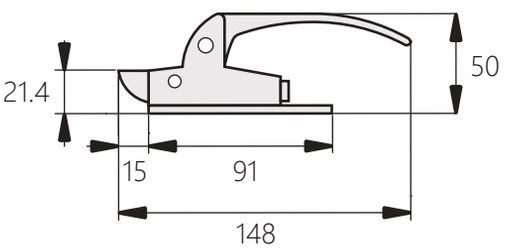

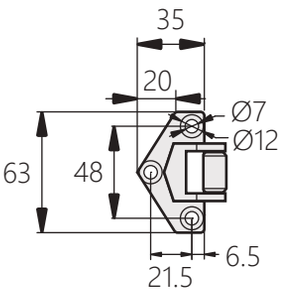

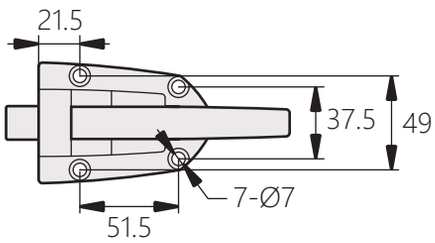

壓縮式手柄

TM-078

Compressed handle



商品介紹:

- 具有壓縮迫緊功能，20萬次的設計開閉次數
- 帶鎖芯，不能隨意打開
- 材質:鋅合金(ZDC)、不鏽鋼(SUS304)
- 表面處理:鍍亮鉻、拉絲拋光
- 用途:工業屏蔽箱、工業密封門、金屬3D打印燒結設備

Product description:

- With strong flex and compression force, the test open and close function for 200,000 times.
- With cylinder, can not optionally open
- Material: Zinc alloy (ZDC), stainless steel (SUS304)
- Surface treatment: Bright chrome plated, brushed polished
- Uses: Industrial shielding box, industrial sealing door, 3D sintering equipment.

商品型號	材質	表面處理	規格
TM-078-1-1	不鏽鋼	拉絲拋光	有鎖
TM-078-1-2	不鏽鋼	拉絲拋光	無鎖
TM-078-2-1	鋅合金	鍍亮鉻	有鎖
TM-078-2-2	鋅合金	鍍亮鉻	無鎖

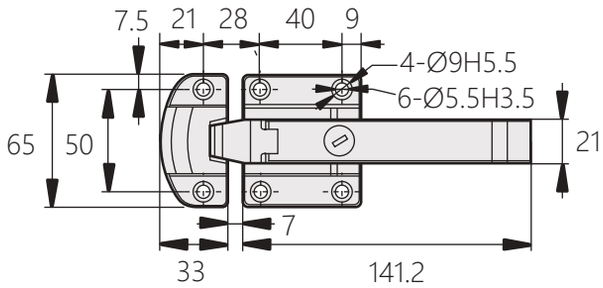

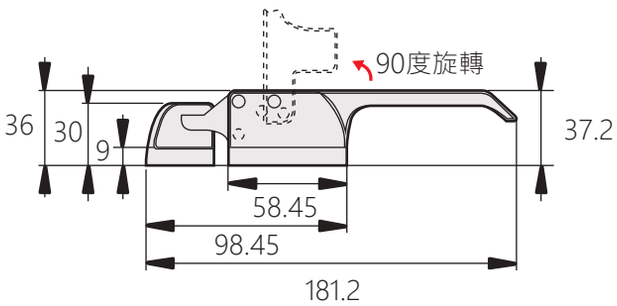

槓桿型壓縮式門扣

Over-Center Lever Latch

TM-6170

CAD



商品介紹:

- ■高強度；安裝及操作簡便，利用槓桿原理使鎖舌在扣座上產生強大的力矩，加強緊迫效果 最大工作附載 2000 N (200KG)(400 lbs)
- ■材質:主體-鋁合金 (ADC)、插銷-鈦合金
- ■表面處理:黑色塗裝
- ■備註:TM-6170-2 與鋁管TM-6170-L500、TM-6170-L1000為選配件

Product description:

- ■High strength; easy to install and operate, use the principleof lever to make the lock tongue in the buckle seat A strongtorque is generated on the upper surface to strengthen thepressing effect. Maximum work load is 2000 N(200KG)(400 lbs)
- ■Material: Body-Aluminum Alloy (ADC), Bolt-Titanium Alloy
- ■Surface treatment: Black coating
- ■Note: TM-6170-2 and aluminum tube TM-6170-L500, TM-6170-L1000 is optional.

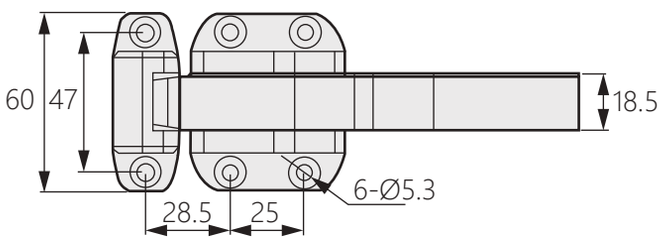

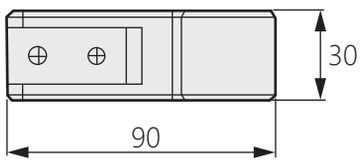

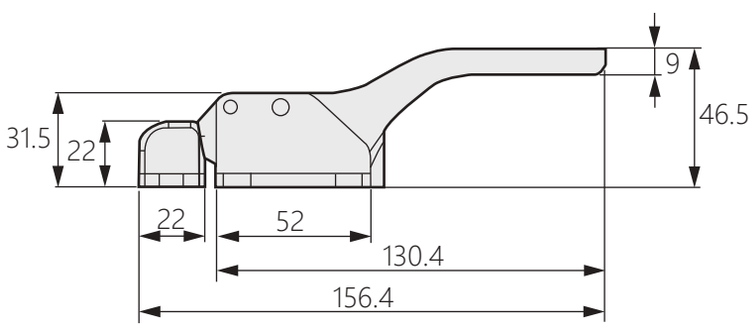

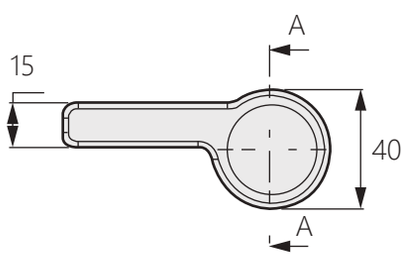

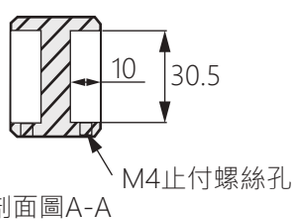

剖面圖A-A

示意圖

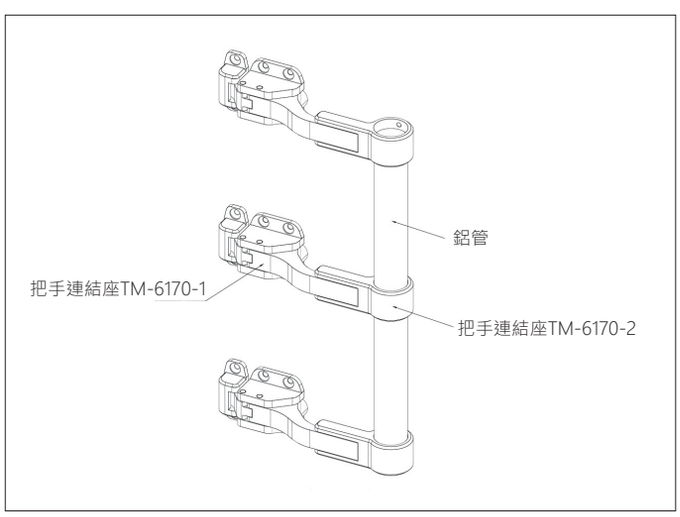

冷庫門把手 TM-0480

Refrigerator door handle



商品介紹:

- ■座子高度可選，適合不同厚度的門
- ■內置彈簧結構，方便開啟和關閉
- ■材質:鋅合金
- ■表面處理:鍍亮鉻
- ■用途:冷凍庫、廚房設備、冰櫃
- ■備註:根據實際門的厚度選擇座子高度

Product description:

- ■Selectable seat height, suitable for doors of different thicknesses.
- ■Built-in spring structure for easy opening and closing.
- ■Material: Zinc alloy
- ■Surface treatment: Bright chrome plating
- ■Uses: Freezer, kitchen equipment, freezer
- ■Note: Choose seat height according to actual door thickness.

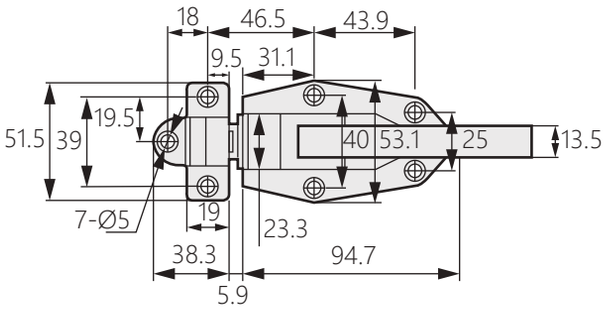

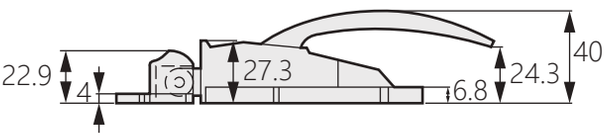

冷庫門把手 TM-1060

Refrigerator door handle



商品介紹:

- ■座子高度可調節，適合不同厚度的門安裝
- ■內置彈簧結構，方便開啟和關閉
- ■材質:不鏽鋼SUS304
- ■表面處理:拉絲拋光
- ■用途:冷凍庫、冰櫃、廚房設備

Product description:

- ■Adjustable seat height, suitable for door installation of different thickness.
- ■Built-in spring structure for easy opening and closing.
- ■Material: Stainless steel (SUS304)
- ■Surface treatment: Brushed and polished
- ■Uses: Feezer, kitchen equipment

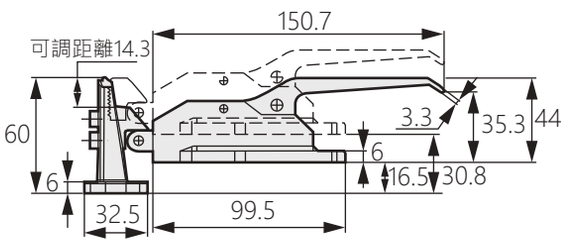

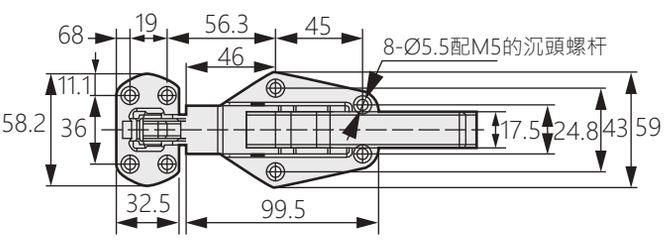

低溫箱門鎖

TM-0511

Cryobox door lock



商品介紹:

- ■座子高度可調，適合大部分門板的安裝
- ■內置彈簧結構，方便開啟和關閉
- ■材質:鋅合金
- ■表面處理:鍍亮鉻
- ■用途:冷凍設備、冷藏櫃、烤箱等

Product description:

- ■Seat height adjustable for most door panels
- ■Built-in spring structure for easy opening and closing
- ■Material: Zinc alloy
- ■Surface treatment: Bright chrome plating
- ■Uses: Freezer, refrigerator, oven, etc.

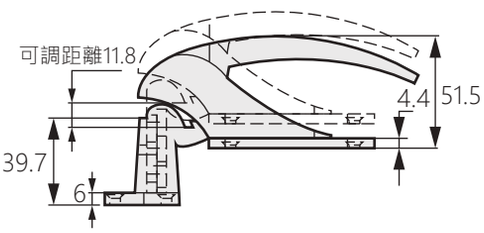

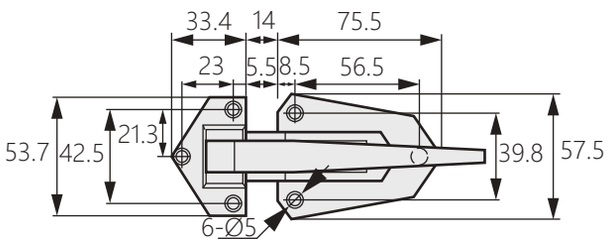

側拉門把手

TM-701

Side pull door handle



商品介紹:

- ■有壓縮迫緊功能，最大壓縮行程約15-18mm
- ■全新外觀專利設計
- ■材質:鋅合金
- ■表面處理:銀色噴塗
- ■用途:深低溫儲藏箱、醫療冷藏箱、試驗箱

Product description:

- ■With compression force function, the maximum compression stroke is about 15-18mm
- ■New appearance patent design
- ■Material: Zinc Alloy
- ■Surface treatment: Silver spray
- ■Uses: Deep and low temperature storage box, medical refrigerator, test box.

商品型號	樣式
TM-701-L	左開
TM-701-R	右開

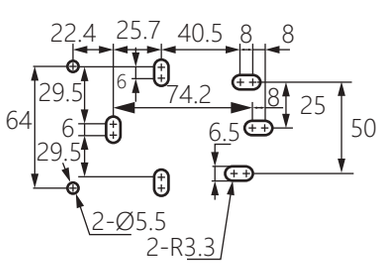

開孔尺寸

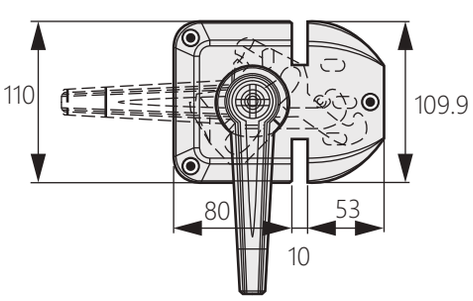

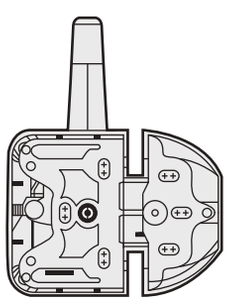

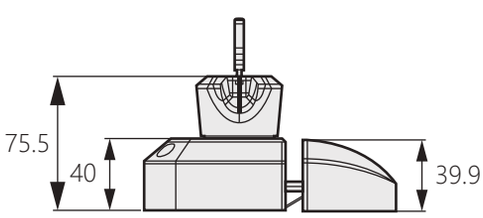

不鏽鋼門把手

Stainless steel door handle

TM-904



商品介紹:

- ■開啟時可以輕鬆開啟有負壓的門
- ■具有壓縮迫緊功能
- ■材質:不鏽鋼SUS304
- ■表面處理:鏡面拋光
- ■用途:屏蔽箱、試驗箱、烤箱等工業設備
- ■備註:可選配高座(TH-904-1)、矮座(TH-904-2)

Product description:

- ■Can easily open doors with negative pressure when opening.
- ■Open both inside and outside
- ■Material: Stainless steel (SUS304)
- ■Surface treatment: Mirror polishing
- ■Uses: Shielded box, test box, oven and other industrial equipment.
- ■Note: Optional high seat (TH-904-1), low seat (TH-904-2).

商品型號	樣式
TH-904-1	高座
TH-904-2	矮座

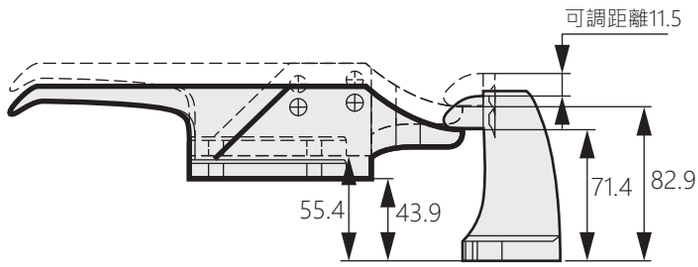

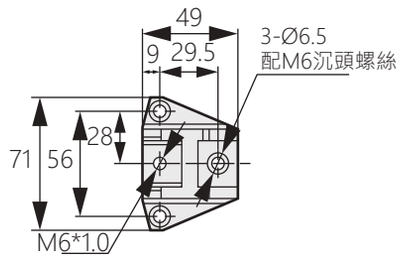

[TH-904-1]

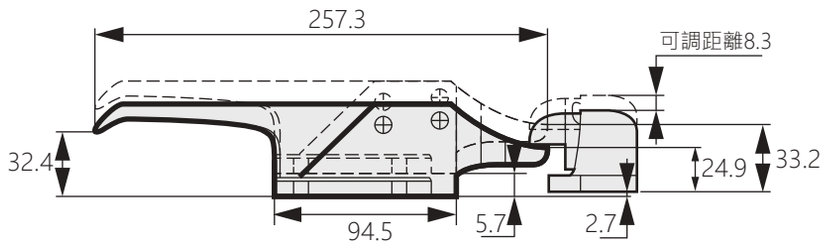

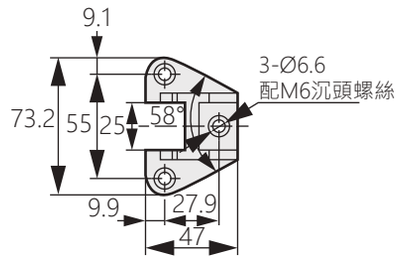

[TH-904-2]

安裝圖

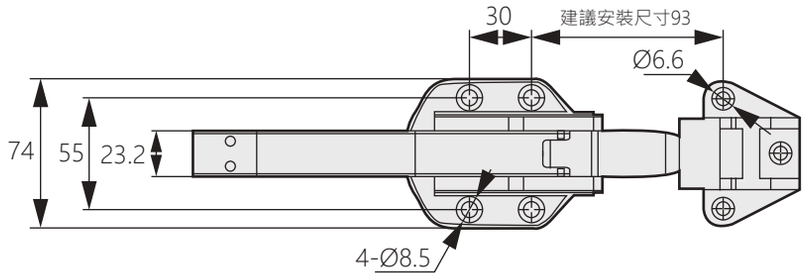



不鏽鋼冷凍庫門把手

TM-1102

Stainless steel freezer door handle



商品介紹:

- ■最大靜載荷:80KG
- ■材質:不鏽鋼304.316
- ■表面處理:鏡光
- ■用途:商業廚具,食品機械,工業設備等

Product description:

- ■MAX load weight: 80kg
- ■Material: Stainless steel 304.316
- ■Surface treatment: Mirror poloshing
- ■Uses: Commercial kitchen equipment, food machiney,industrial equipment,etc.

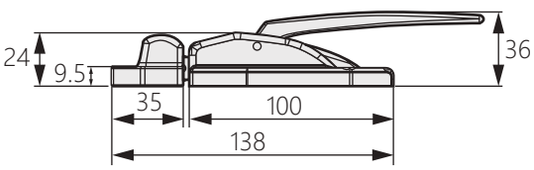

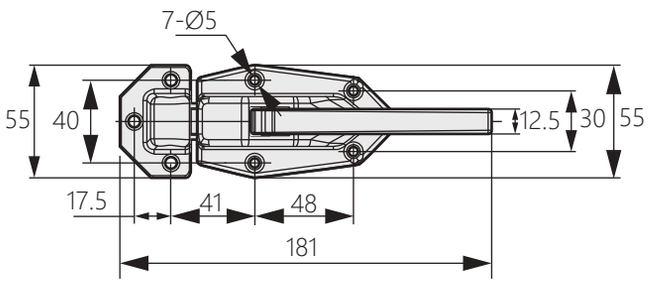

高溫箱把手鎖

TM-041

High temperature box handle lock



商品介紹:

- ■座子高度可調節，適合不同高度的門
- ■內置彈簧結構，方便開啟和關閉
- ■材質:鋅合金
- ■表面處理:鍍亮鉻
- ■用途:冷凍設備、冷藏櫃、烤箱
- ■備註:左右開門都可以安裝

Product description:

- ■Adjustable seat height for doors of different heights
- ■Built-in spring structure for easy opening and closing
- ■Material: Zinc alloy
- ■Surface treatment: Bright chrome plating
- ■Uses: Freezer, refrigerator, oven.
- ■Note: Both left and right doors can be installed.

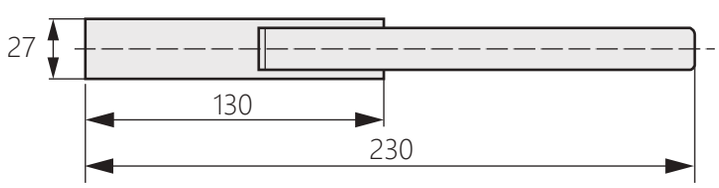

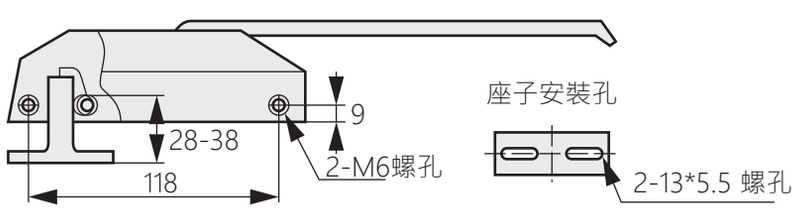

高溫箱把手鎖

High temperature box handle lock

TM-0681



商品介紹:

- ■二次開門式專利設計
- ■避免開啟時溫度或壓力過高
- ■材質:鋅合金
- ■表面處理:鍍亮鉻
- ■用途:高溫烤箱、試驗箱、恆溫恆濕箱
- ■備註:配黑色膠塞

Product description:

- ■Second-door patented design
- ■Avoid excessive temperature or pressure when opening.
- ■Material: Zinc alloy
- ■Surface treatment: Bright chrome plating
- ■Uses: High temperature oven, test box, constant temperature and humidity box.
- ■Note: With black rubber stopper

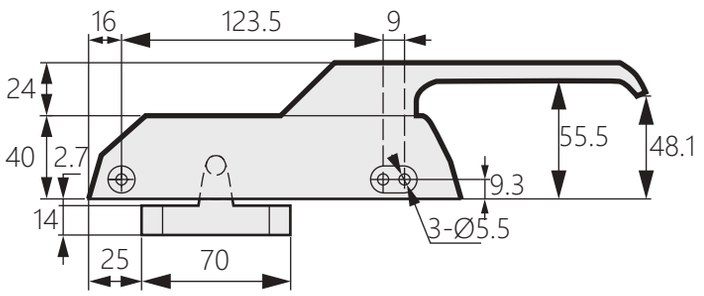

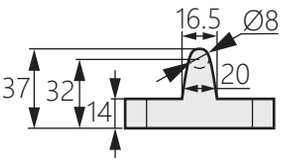

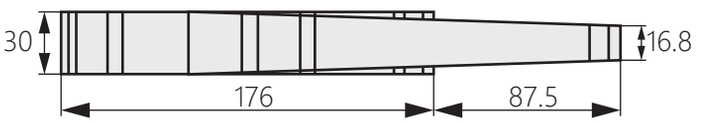

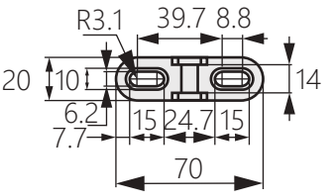

安裝座子尺寸圈

操作圖

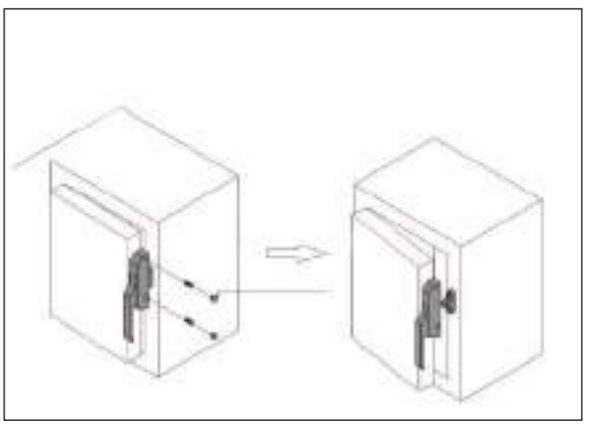

- •第一次開啟釋放箱內高溫高壓,此時門未被完全打開
- •第二次則可將們完全打開,可以一次性關閉門
- •First time open,release inside high temperature and pressure,but the door not opens exactly.
- •Second time,can open the door totally,and can close the door disposable This product is oer partent product.

密封箱轉角把手

Sealed box corner handle

TM-778



商品介紹:

- ■合理的結構設計，可輕鬆開啟和關閉門
- ■內置彈簧結構，減輕操作的困難度
- ■材質:鋅合金
- ■表面處理:鍍亮鉻
- ■用途:冷凍設備、醫療設備、廚房設備

Product description:

- ■Reasonable structural design, can easily open and close the door.
- ■Built-in spring structure, reducing the difficulty of operation.
- ■Material: Zinc Alloy
- ■Surface treatment: Bright chrome plating
- ■Uses: Refrigeration equipment, medical equipment, kitchen equipment.

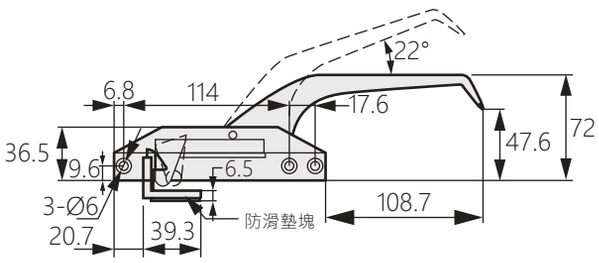

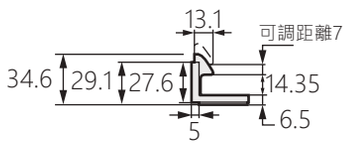

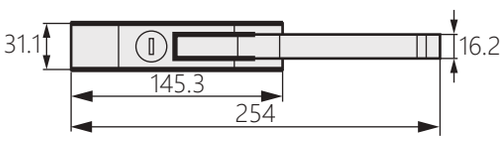

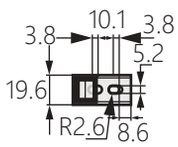

庫門把手

Cumen handle

TM-131



商品介紹:

- ■內置彈簧結構，開啟和關閉輕鬆
- ■座子高度可調節
- ■材質:鋅合金
- ■表面處理:鍍亮鉻
- ■用途:冷凍設備、廚房設備、醫療設備等
- ■備註:座子調節範圍17-30mm

Product description:

- ■Built-in spring structure for easy opening and closing.
- ■Adjustable seat height
- ■Material: Zinc alloy
- ■Surface treatment: Bright chrome plating
- ■Uses: Refrigeration equipment, kitchen equipment, medical equipment, etc.
- ■Note: Seat adjustment range: 17-30mm

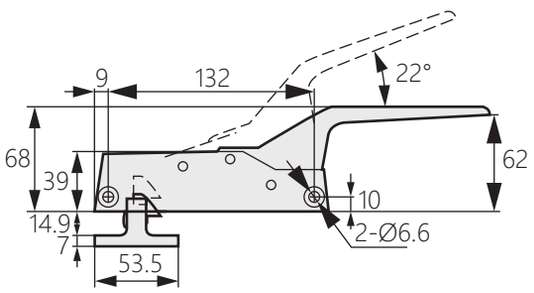

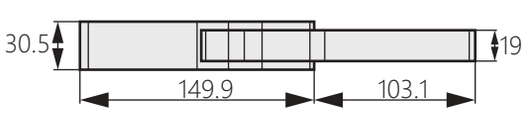

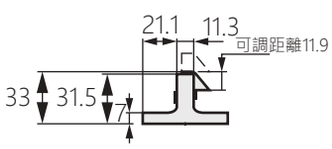

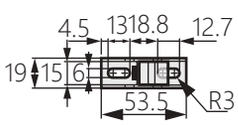

安裝座子尺寸圖

不鏽鋼門把手鎖

TM-1104

Stainless steel door handle



商品介紹:

- 承受能力:30-80KG/PC
- 材質:不鏽鋼304.316
- 表面處理:拉絲
- 用途:特種車輛，冷藏車廂，集裝箱，船舶，製冷設備，食品機械，化工機械，環保機械等設備

Product description:

- Withstand capacity: 30-80KG/PC
- Material: Stainless steel 304.316
- Surface treatment: Brushed
- Uses: Special vehicles, refrigerated compartments, containers, ships, refrigeration equipment, food machinery, chemical machinery, environmental protection machinery and other equipment.

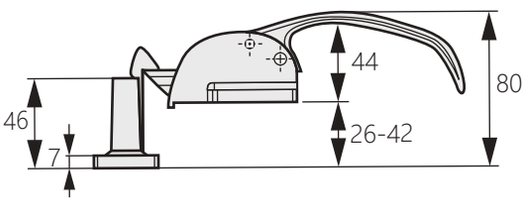

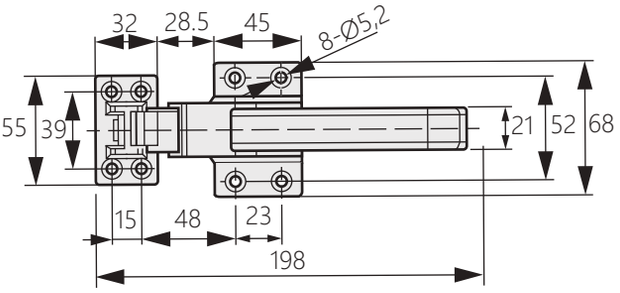

不鏽鋼門鎖拉手

TM-1103

Stainless steel door handle



商品介紹:

- 最大靜載荷:80KG
- 材質:不鏽鋼304.316
- 表面處理:拉絲
- 用途:商業廚具,食品機械,工業設備等

Product description:

- MAX Load weight: 80kg
- Material: Stainless steel 304.316
- Surface treatment: Drawbench
- Uses: Commercial kitchen equipment food machiney , industrial equipment ,etc.

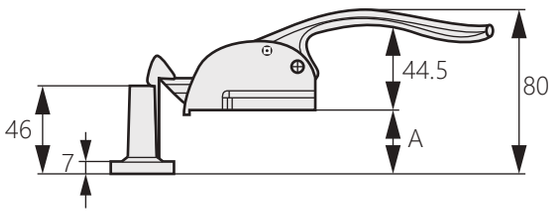

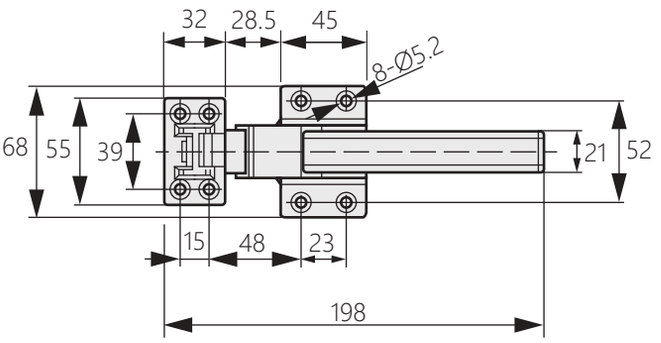

商品型號	A
TM-1103-1	26-42
TM-1103-2	50-66

不鏽鋼把手

TM-1105

Stainless steel handle



商品介紹:

- 最大靜載荷:100kg
- 材質:不鏽鋼304.316
- 表面處理:拉絲
- 用途:商業廚具,食品機械,工業設備等

Product description:

- MAX Load weight: 100kg
- Material: Stainless steel 304.316
- Surface treatment: Drawbench
- Uses: Commercial kitchen equipment,food machiney, industrial equipment,etc.

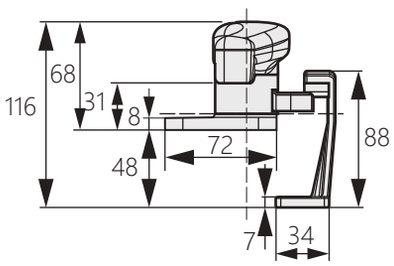

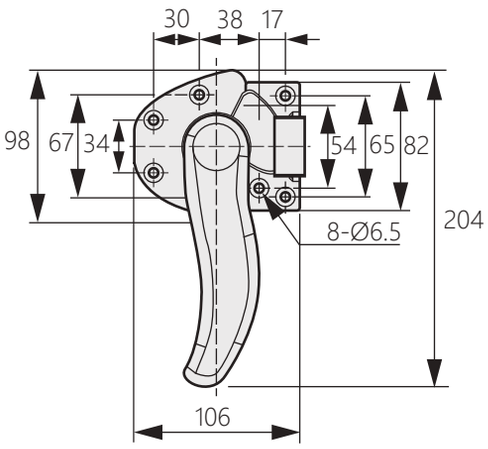

不鏽鋼把手

TM-1106

Stainless steel handle



商品介紹:

- 最大靜載荷:100kg
- 材質:不鏽鋼304.316
- 表面處理:拉絲
- 用途:商業廚具,食品機械,工業設備等

Product description:

- MAX Load weight: 100kg
- Material: Stainless steel 304.316
- Surface treatment: Drawbench
- Uses: Commercial kitchen equipment,food machiney, industrial equipment,etc.

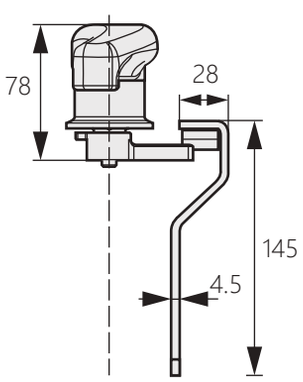

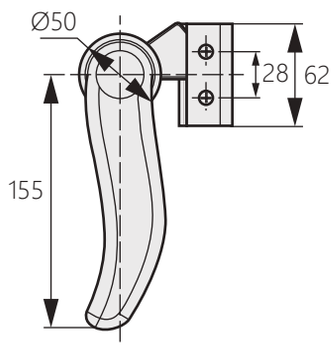

不鏽鋼把手

TM-1107

Stainless steel handle



商品介紹:

- 最大靜載荷:100kg
- 材質:不鏽鋼304.316
- 表面處理:拉絲
- 用途:商業廚具,食品機械,工業設備等

Product description:

- MAX Load weight: 100kg
- Material: Stainless steel 304.316
- Surface treatment: Drawbench
- Uses: Commercial kitchen equipment,food machiney, industrial equipment,etc.

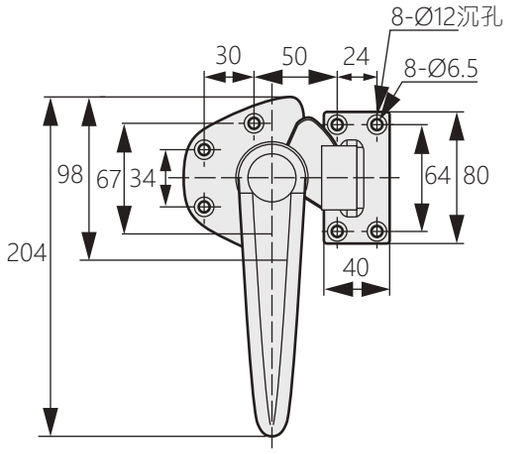

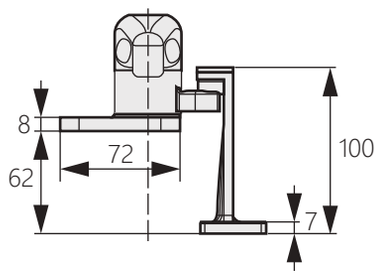

不鏽鋼把手

TM-1108

Stainless steel handle



商品介紹:

- 最大靜載荷:100kg
- 材質:不鏽鋼304.316
- 表面處理:拉絲
- 用途:商業廚具,食品機械,工業設備等

Product description:

- MAX Load weight: 100kg
- Material: Stainless steel 304.316
- Surface treatment: Drawbench
- Uses: Commercial kitchen equipment,food machiney, industrial equipment,etc.

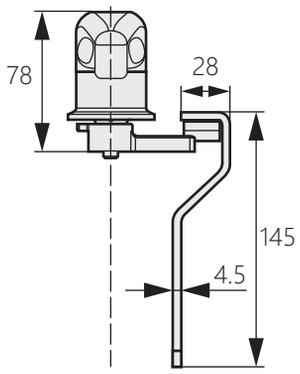

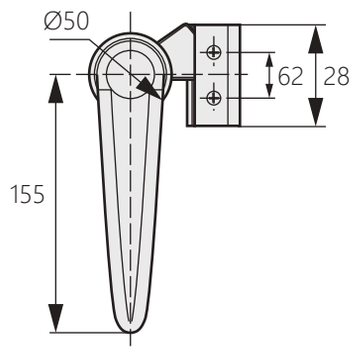

側裝把手

TM-073

Handle lock



商品介紹:

- 配帶鎖芯，單點鎖定
- 內置彈簧結構，方便開啟和關閉
- 材質:鋅合金
- 表面處理:鍍亮鉻
- 用途:烤箱、試驗箱

Product description:

- With cylinder, single latching
- Innerspring structure, easy to open and close
- Material: Zinc alloy (ZDC)
- Surface treatment: Bright chrome plated
- Uses: Oven, testing chamber

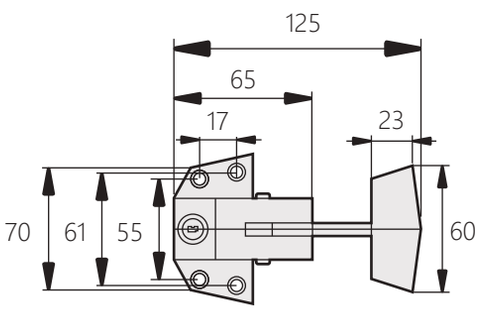

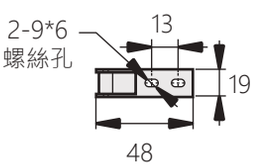

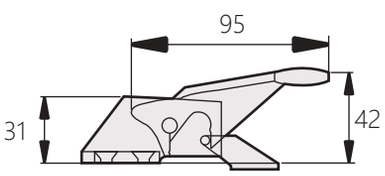

冷凍庫把手

TM-075

Refrigerator handle



商品介紹:

- 內置彈簧結構，開啟或關閉門輕鬆
- 座子高度可調，適合大部分冷庫門的安裝
- 左右兼用型
- 材質:鋅合金(ZDC)
- 表面處理:鍍亮鉻
- 調節座子滑塊，以適應不同高度
- 用途:冷凍櫃、小冰櫃、蒸飯櫃、工業烤箱
- 備註:安裝於冷庫凸門上，座子高度可調節，適合於大部分冷庫門的安裝

Product description:

- Innerspring structure, easy to open and close door
- Adjustable base height, suitable for most
- Suitable for left and right side opening
- Material: Zinc Alloy (ZDC)
- Surface treatment: Bright chrome plating
- Transposon adjustment slider to accommodate
- Uses: Freezer, small freezer, steaming cabinet, industrial oven.
- Note: Installed on the refrigerator cam door, adjustable base height, suitable for various refrigerator installation.

安裝示意圖



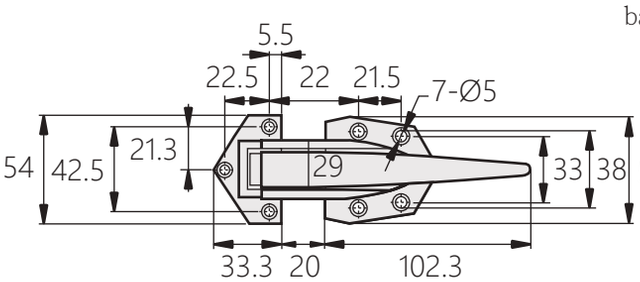

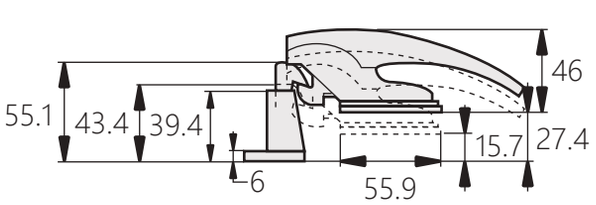

冷凍庫把手

TM-076

Refrigerator handle



商品介紹:

- 內置彈簧結構，開啟或關閉門輕鬆
- 座子高度可調，適合大部分冷庫門的安裝
- 左右兼用型
- 材質:鋅合金(ZDC)
- 表面處理:鍍亮鉻
- 調節座子滑塊，以適應不同高度
- 用途:冷凍櫃、小冰櫃、蒸飯櫃、工業烤箱
- 備註:安裝於冷庫凸門上，座子高度可調節，適合於大部分冷庫門的安裝

Product description:

- Innerspring structure, easy to open and close door
- Adjustable base height, suitable for most
- Suitable for left and right side opening
- Material: Zinc Alloy (ZDC)
- Surface treatment: Bright chrome plating
- Transposon adjustment slider to accommodate
- Uses: Freezer, small freezer, steaming cabinet, industrial oven.
- Note: Installed on the refrigerator cam door, adjustable base height, suitable for various refrigerator installation.

安裝示意圖

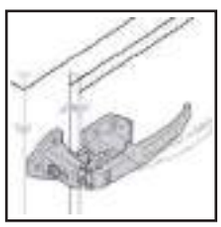

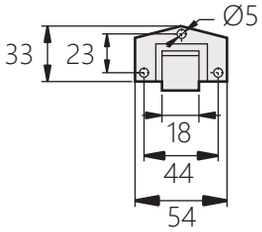

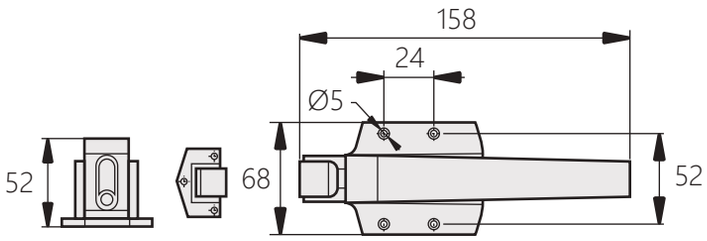

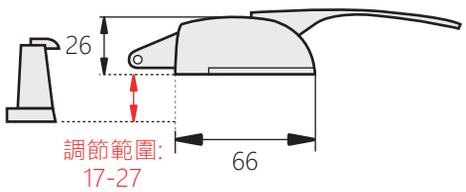

密閉式門把手

TM-077

Lever latch



商品介紹:

- 具有壓縮迫緊功能，20萬次的設計開閉次數
- 開啟時可以輕鬆開啟有負壓的門
- 材質:不鏽鋼(SUS304)
- 表面處理:鏡面拋光、電解
- 用途:工業隔音箱、試驗箱、工業設備、烤箱

Product description:

- Easy to open and close, the test open and close function for 200000 times
- Easily open the negative pressure door
- Material: Stainless steel (SUS304)
- Surface treatment: Mirror polishing, Electrolysis
- Uses: Industrial soundproof box, test chamber, industrial equipment, oven.

安裝示意圖

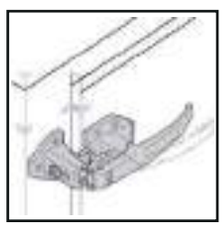

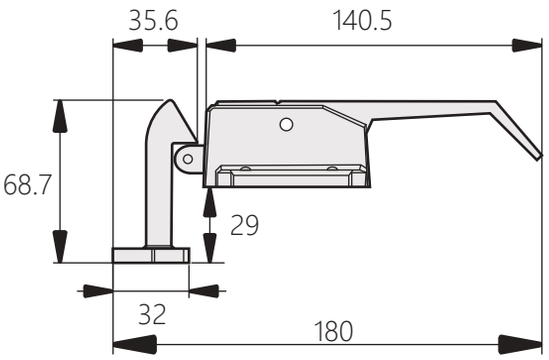

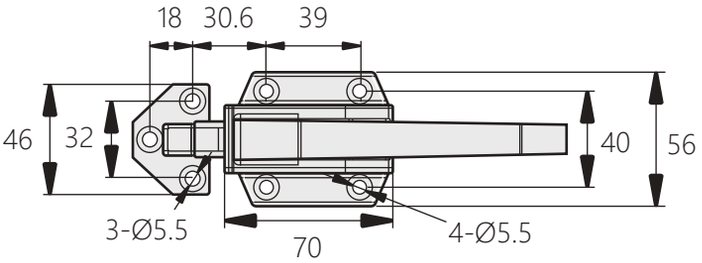

密閉防震把手

TM-1011

Sealed shockproof handle



商品介紹:

- ■手柄包膠，可用於高溫箱體
- ■材質:不鏽鋼SUS304
- ■表面處理:拉絲拋光
- ■用途:廚房設備、蒸汽箱、烤箱等

Product description:

- ■Handle with rubber cover for high temperature cabinet.
- ■Built-in spring structure, reducing the difficulty of operation.
- ■Material: Stainless steel (SUS304)
- ■Surface treatment: Brushed and polished
- ■Uses: Kitchen equipment, steam box, oven, etc.

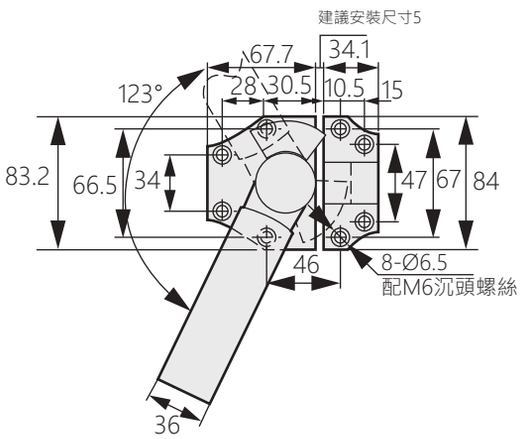

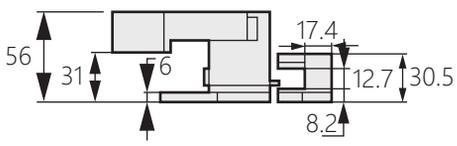

商品型號	樣式
TM-1011-L	左開
TM-1011-R	右開

烤箱把手

TM-0460

Oven handle



商品介紹:

- ■座子高度可調節，適合不同厚度的門安裝
- ■內置彈簧結構，方便開啟和關閉
- ■材質:不鏽鋼SUS304
- ■表面處理:拉絲拋光
- ■用途:冷凍庫、冰櫃、廚房設備

Product description:

- ■Adjustable seat height, suitable for door installation of different thickness.
- ■Built-in spring structure for easy opening and closing.
- ■Material: Stainless steel (SUS304)
- ■Surface treatment: Brushed and polished
- ■Uses: Feezer, freezer, kitchen equipment

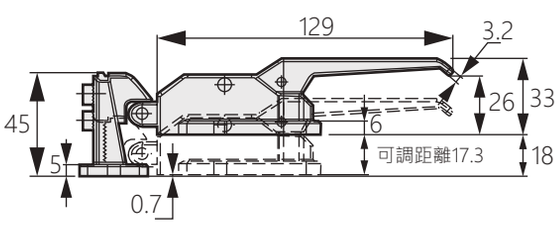

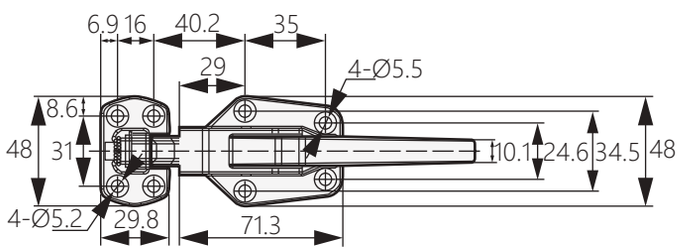

冷凍庫安全密封把手

TM-1178

Freezer Safety Handles For Airtightness



商品介紹:

- 有在冷凍內也能緊急開鎖逃生的裝置
- 材質:鋅合金 (ZDC)
- 表面處理:鍍鉻
- 備註:TM-1178-1,TM-1178-2可單賣,敬請洽詢

Product description:

- Provided with the unlockable function for emergencies, such as escape from a locked-up storeroom.
- Material: Zinc Alloy (ZDC)
- Surface treatment: Electroplated With Chrome
- Note: TM-1178-1 and TM-1178-2. can be sold separately, please contact us.

[TH-A-46]

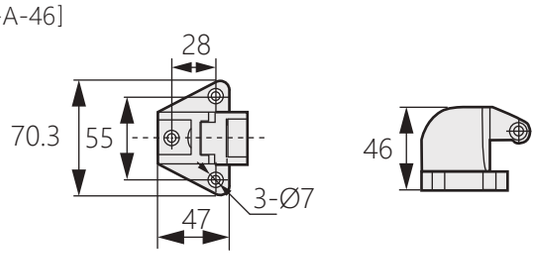

[TH-A-90]

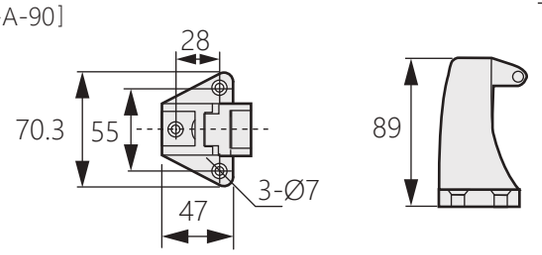

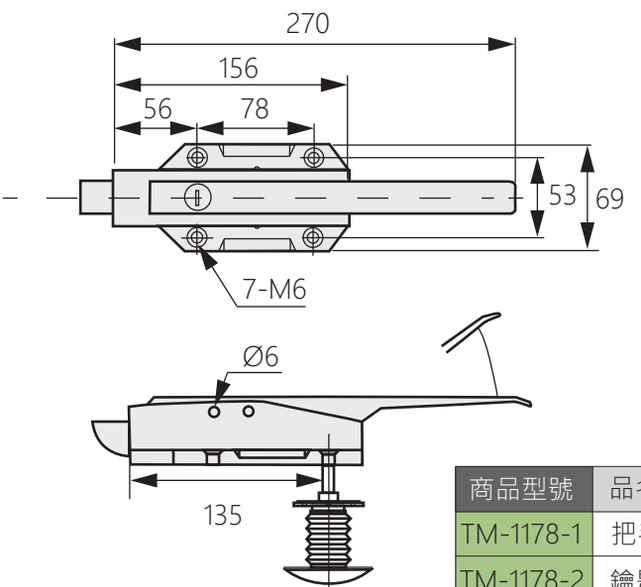

商品型號	配件	高度
TH-A-90	高扣座	40~70
TH-A-46	低扣座	22~30

商品型號	品名
TM-1178-1	把手
TM-1178-2	鑰匙
TM-1178-3	按壓桿

冷凍庫密封把手

TM-711

Freezer Airtightness Handle



商品介紹:

- 小而耐用的結構，用手即可開啟 / 關閉門板
- 材質:鋅合金 (ZDC)
- 表面處理:鍍鉻

Product description:

- Small but durable construction for hard use of doorone-
- touch locking/unlocking.
- Material: Zinc Alloy (ZDC)
- Surface treatment: Electroplated With Chrome
- Uses: Cabinets, distribution boards, mechanical equipment.

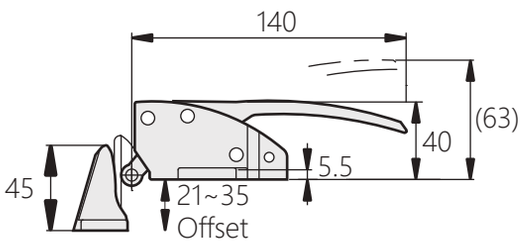

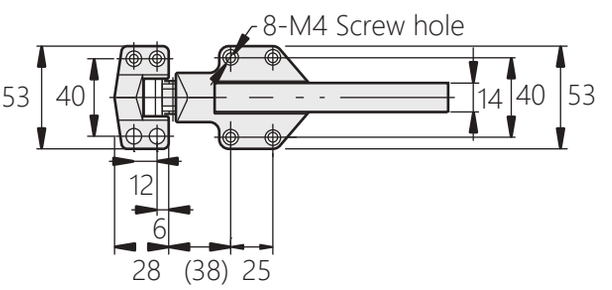

冷凍庫密封側角把手 TM-1200

Corner Handle For Airtightness



商品介紹:
- 材質:鋅合金 (ZDC)
- 表面處理:鍍鉻

Product description:
- Material: Zinc Alloy (ZDC)
- Surface treatment: Electroplated With Chrome

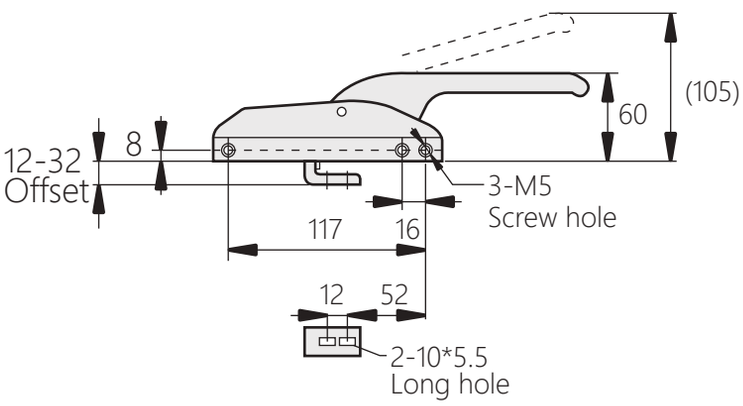

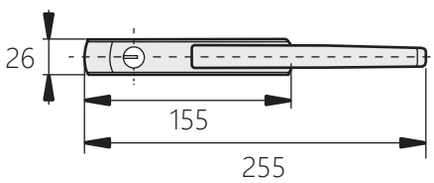

冷凍庫密封側角把手 TM-1201

Corner Handle For Airtightness



商品介紹:
- 小而耐用的結構，用手即可開啟 / 關閉門板
- 材質:鋅合金 (ZDC)
- 表面處理:鍍鉻

Product description:
- Small but durable construction for hard use of door one-touch locking/unlocking
- Material: Zinc Alloy (ZDC)
- Surface treatment: Electroplated With Chrome
- Uses: Cabinets, distribution boards, mechanical equipment.

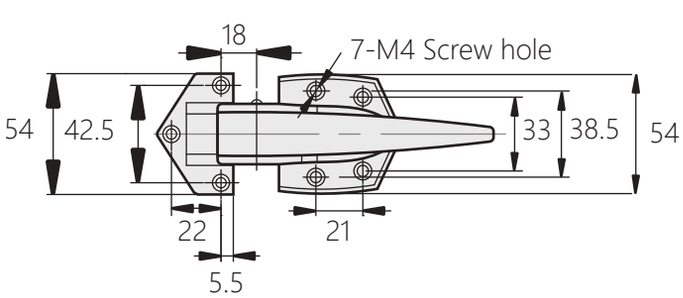

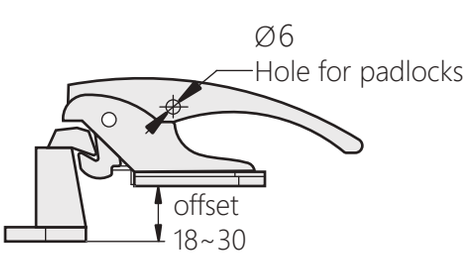

不鏽鋼把手

TM-1210

Stainless steel handle



商品介紹:

- 最大靜載荷:120kg
- 材質:不鏽鋼304.316
- 表面處理:鏡光
- 用途:商業廚具,食品機械,工業設備等,旋轉角度0-90°

Product description:

- MAX Load weight: 120kg
- Material: Stainless steel 304.316
- Surface treatment: Mirror poloshing
- Uses: Commercial kitchen equipment, food machiney, industrial equipment,etc.Angle of rotation is 0-90°.

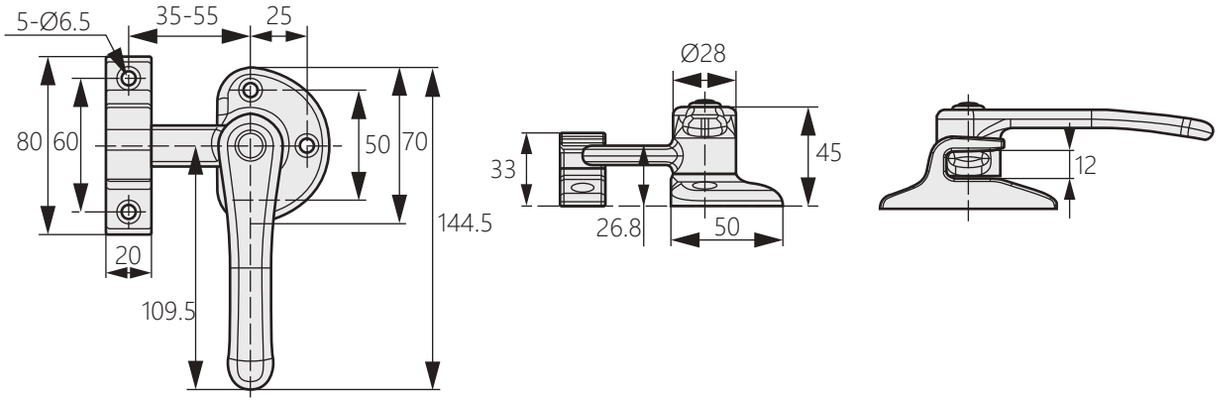

不鏽鋼把手

TM-1202

Stainless steel handle



商品介紹:

- 最大靜載荷:120kg
- 材質:不鏽鋼304.316
- 表面處理:鏡光
- 用途:商業廚具,食品機械,工業設備等,旋轉角度0-90°

Product description:

- MAX Load weight: 120kg
- Material: Stainless steel 304.316
- Surface treatment: Mirror poloshing
- Uses: Commercial kitchen equipment, food machiney, industrial equipment,etc.Angle of rotation is 0-90°.

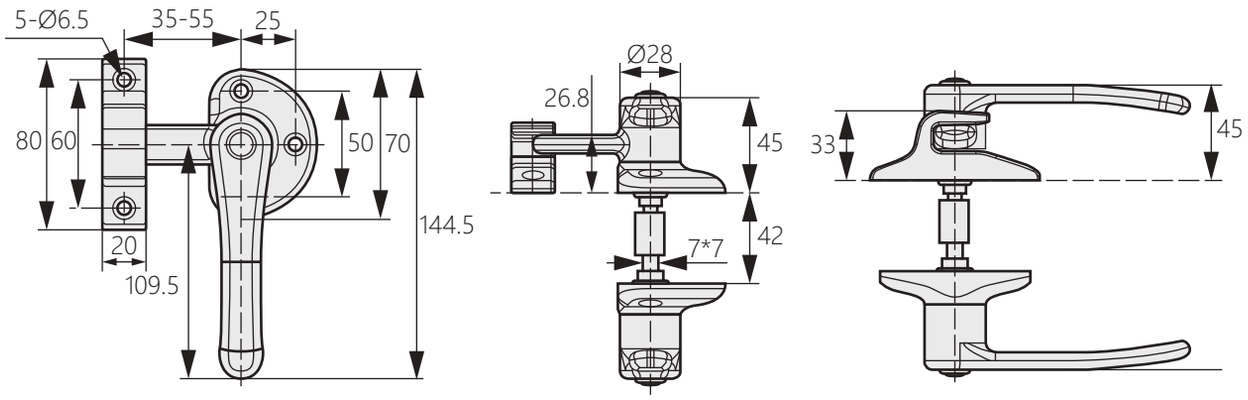

冷凍庫門把手鎖

Refrigerator door handle lock

TM-1240



商品介紹:

- ■內置彈簧結構，方便開啟和關閉
- ■材質:鋅合金
- ■表面處理:鍍亮鉻
- ■用途:冷藏櫃、冷凍設備、烤箱等

Product description:

- ■Built-in spring structure for easy opening and closing.
- ■Material: Zinc alloy
- ■Surface treatment: Bright chrome plating
- ■Uses: Refrigerator, freezer, oven, etc.

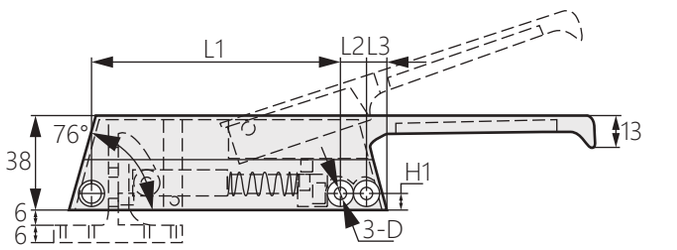

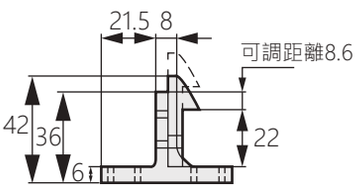

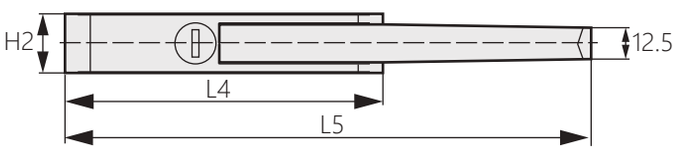

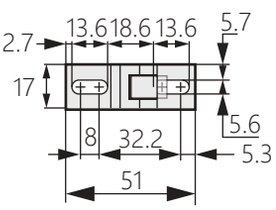

安裝座子尺寸圖

商品型號	L1	L2	L3	L4	L5	H1	H2	D
TM-1240-1	105.8	11.2	9.75	136.6	240	9.5	24	6.2
TM-1240-2	97.5	10	8	123.5	205	6.5	23	5

冷凍庫門把手鎖

Refrigerator door handle lock

TM-1250



商品介紹:

- ■內置彈簧結構，方便開啟和關閉
- ■材質:鋅合金
- ■表面處理:鍍亮鉻
- ■用途:冷藏櫃、冷凍設備、烤箱等

Product description:

- ■Built-in spring structure for easy opening and closing.
- ■Material: Zinc alloy
- ■Surface treatment: Bright chrome plating
- ■Uses: Refrigerator, freezer, oven, etc.

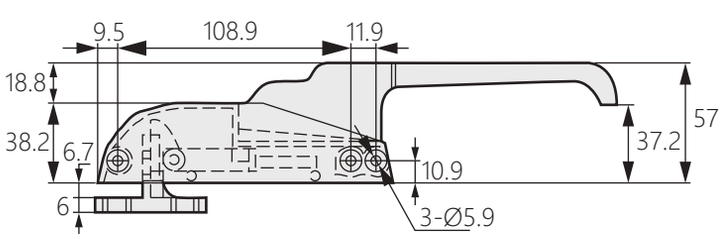

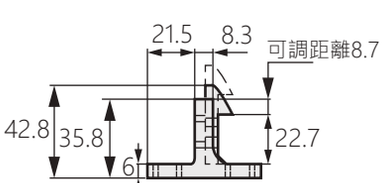

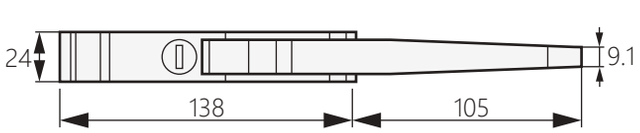

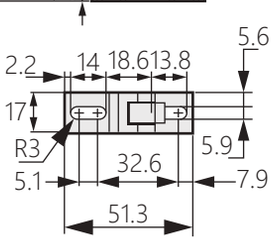

安裝座子尺寸圖

密封緊迫門鎖

TM-8116

Sealed tight door lock



商品介紹:

- ■可強力密閉具有良好的耐腐蝕性有左右開門區分
- ■材質:不鏽鋼304脫臘鑄造
- ■表面處理:鏡面拋光
- ■用途:震動機械之門扇、密封門、電磁波防護門、隔音門、醫療設備

Product description:

- ■Powerful airtight closure is provided Corrosion-resistant Stainless Steel is used The left-hand or right-hand use.
- ■Material: Cast stainless steel (SUS304)
- ■Surface treatment: Mirror surface buffing
- ■Uses: Doors of oscillation devices, airtight doors, electromagnetic-waveproof doors, soundproof doors.

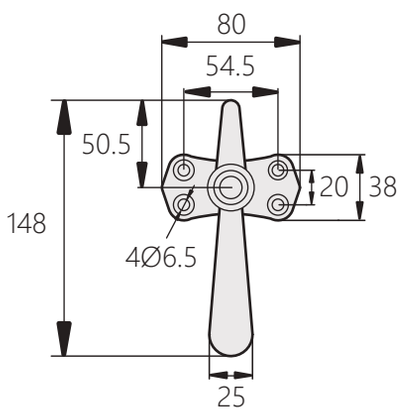

[TM-8116-L]

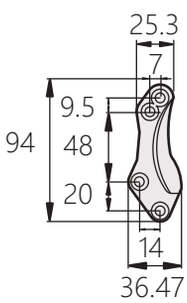

[TM-8116-R]

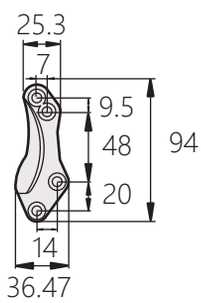

商品型號
TM-8116-L
TM-8116-R

左右緊迫門鎖

TM-2115

Right and left pressing door lock



商品介紹:

- ■ 可強力密閉具有良好的耐腐蝕性有左右開門區分
- ■ 材質:不鏽鋼304脫臘鑄造
- ■ 表面處理:鏡面拋光
- ■ 用途:震動機械之門扇、密封門、電磁波防護門、隔音門、醫療設備

Product description:

- ■ Powerful airtight closure is provided Corrosion-resistant Stainless Steel is used The left-hand or right-hand use.
- ■ Material: Cast stainless steel (SUS304)
- ■ Surface treatment: Mirror surface buffing
- ■ Uses: Doors of oscillation devices, airtight doors, electromagnetic-waveproof doors, soundproof doors.

[TM-2115-L
TM-2115-R]

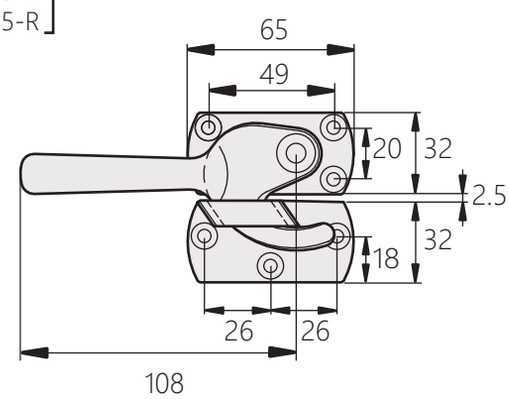

商品型號
TM-2115-L
TM-2115-R

迫緊式把手門鎖

TM-8118

Forced handle door lock



商品介紹:

- 斜面迫緊設計，可將門強力迫緊
- 材質:不鏽鋼316脫臘鑄造
- 表面處理:鏡面拋光
- 用途:半導體工程、工業工程、機械五金

Product description:

- The bevel is tightly designed to force the door tightly
- Material: Stainless steel dewaxing casting
- Surface treatment: Mirror polishing
- Uses: Semiconductor engineering, industrial engineering, mechanical hardware.

[TM-8118-1]

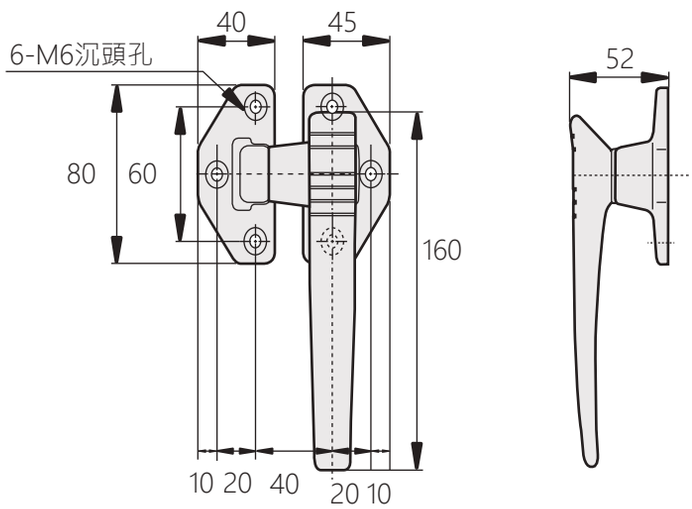

[TM-8118-2
TM-8118-3]

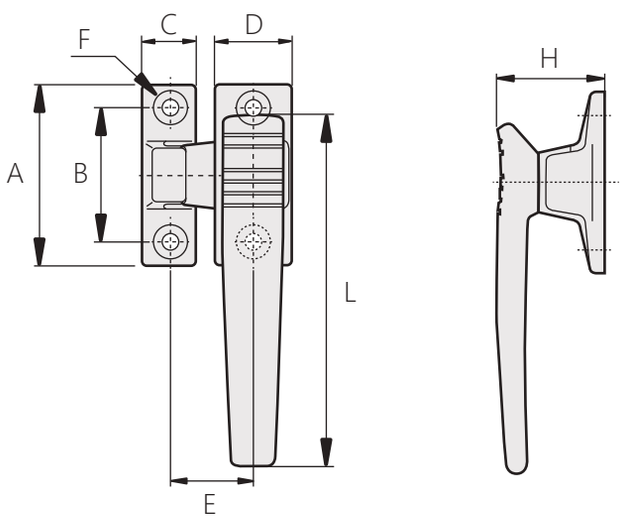

商品型號	L	C	D	A	H	B	E	F
TM-8118-2	130	20	28	70	44	50	30	4-M5
TM-8118-3	105	16	23	54	32	40	25	4-M5

滾輪式樣氣密門鎖

TM-2210

Roller style airtight door lock



商品介紹:

- 材質:不鏽鋼304脫臘鑄造
- 表面處理:鏡面拋光
- 用途:用於門冰箱、各種儲物盒、廚房設備和烘乾機

Product description:

- Material: Stainless steel304 dewaxing casting
- Surface treatment: Mirror polishing
- Uses: For door refrigerators, various storage boxes, kitchen equipment and dryers.

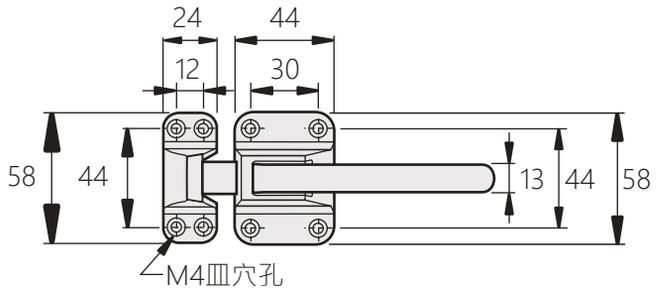

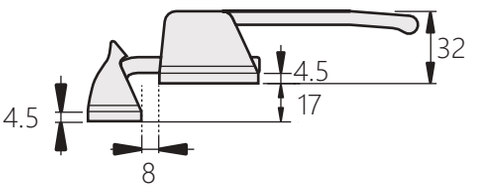

門扣鉤鎖

TM-079

Handle Lock



商品介紹:

- 左右開門兼用
- 材質:鋅合金(ZDC)
- 表面處理:鍍亮鉻
- 用途:恆溫環溫箱、烤箱、試驗箱

Product description:

- Suitable for left and right side opening
- Material: Zinc Alloy (ZDC)
- Surface treatment: Bright chrome plating
- Uses: Thermostat ring oven, oven, test chamber.

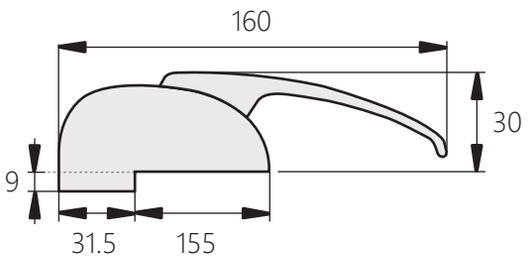

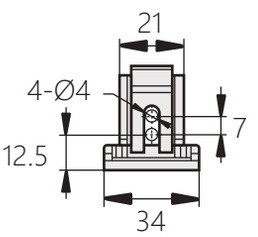

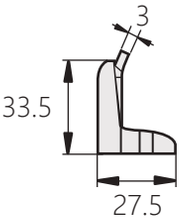

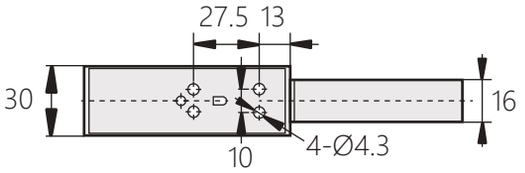

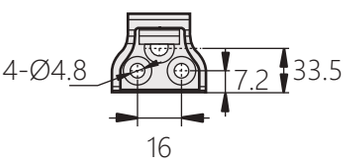

商品型號	規格
TM-079-1	帶鎖芯
TM-079-2	無鎖芯

槓桿型壓縮式門扣

Over-Canter Lever Latch

TM-6150



商品介紹:

- 高強度，安裝及操作簡便，利用槓桿原理使鎖舌在扣座上產生強大的力矩，加強緊迫效果
- 最大工作附載 2000 N (200KG)(400 lbs)
- 材質:鋅合金.不鏽鋼
- 表面處理:黑色塗裝、鍍鉻
- 用途:汽車、卡車、產品、施工設備、農業機具、食品機械、空調系統、工業用機具、工業機械、機床

Product description:

- Combining strength, ease of installation, and simplicity of operation, The single-motion opening action of latch applies built-in leverage against the keeper to provide mechanical advantage to help pry stuck doors open.
- Maximum work load 2000 N (200KG) (400 lbs)
- Material: Zinc Alloy
- Surface treatment: Black Powder Coated &Electroplated With Chrome
- Uses: Automotive/Trucks, Appliances, Construction Equipment, Off-Highway Vehicles, Farm Equipment, Food Equipment, HVAC, Industrial Enclosures, Industrial Machinery, Machine Tools and Metal Cutting.

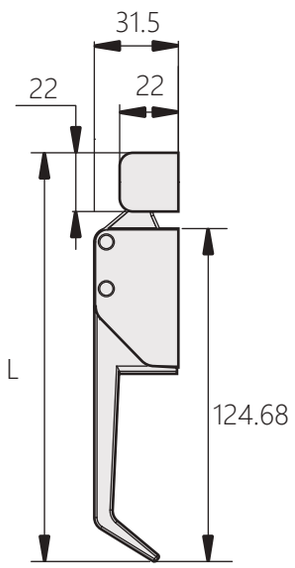

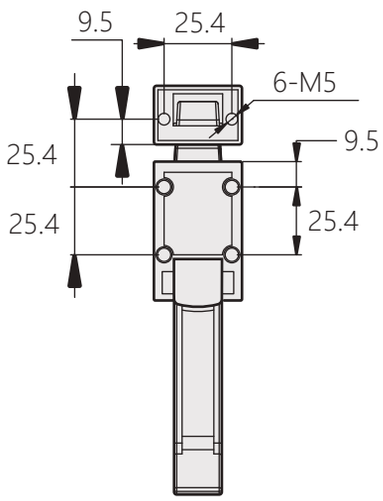

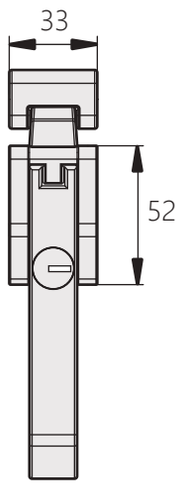

開啟示意圖



商品型號	材質	表面處理	規格	L
TM-6150-1-1	不鏽鋼	鏡面拋光	無鎖	152.3
TM-6150-2-1B	鋅合金	黑色塗裝	有鎖	153.09
TM-6150-2-1W	鋅合金	鍍鉻	有鎖	153.09
TM-6150-2-2B	鋅合金	黑色塗裝	無鎖	153.09
TM-6150-2-2W	鋅合金	鍍鉻	無鎖	153.09

密封型把手

Sealed handle

TM-8113



商品介紹:

- 座子高度可調節，迫緊功能強
- 手柄為包膠材質，有效隔絕高溫
- 材質:鋅合金
- 表面處理:鍍亮鉻
- 用途:廚房設備、蒸汽箱、烤箱等

Product description:

- Adjustable seat height, strong pressing function
- The handle is made of rubber, which can effectively isolate the high temperature.
- Material: Zinc alloy
- Surface treatment: Bright chrome plating
- Uses: Kitchen equipment, steam box, oven, etc.

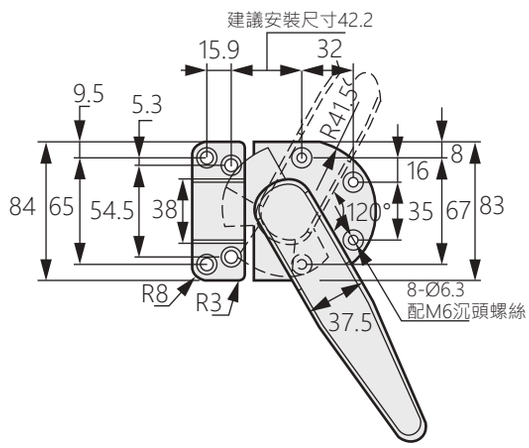

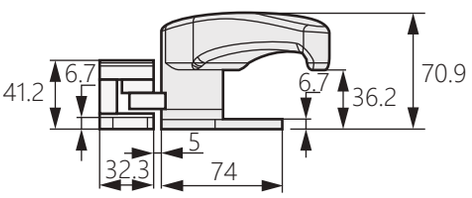

商品型號	樣式
TM-8113-L	左開
TM-8113-R	右開

緊迫門鎖

Arm Catches

TM-8110



商品介紹:

- 材質:不鏽鋼316脫臘鑄造
- 表面處理:鏡面拋光
- 用途:半導體工程、工業工程、機械五金

Product description:

- Material: Stainless steel dewaxing casting
- Surface treatment: Mirror polishing
- Uses: Semiconductor engineering, industrial engineering, mechanical hardware.

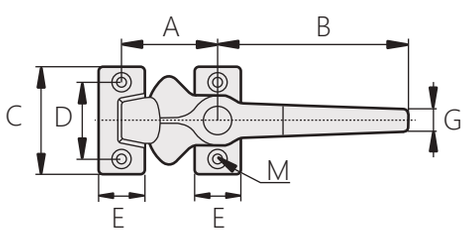

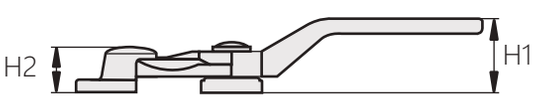

商品型號	材質	B	C	E	G	H1	H2	A	D	M
TM-8110-1	不鏽鋼316	100	56	24	12	30	18	50	40	4-M5
TM-8110-2	不鏽鋼316	70	45	18	8	23	14	35	30	4-M4

迫緊式把手門鎖

TM-8114

Forced handle door lock



商品介紹:

- 斜面迫緊設計，可將門強力迫緊
- 材質:不鏽鋼脫臘鑄造
- 表面處理:鏡面拋光
- 用途:半導體工程、工業工程、機械五金

Product description:

- The bevel is tightly designed to force the door tightly.
- Material: Stainless steel dewaxing casting
- Surface treatment: Mirror polishing
- Uses: Semiconductor engineering, industrial engineering, mechanical hardware.

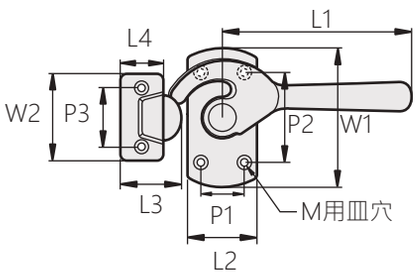

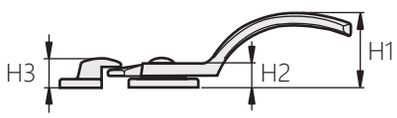

商品型號	材質	L1	L2	L3	L4	W1	W2	P1	P2	P3	H1	H2	H3	M
TM-8114-1-L / R	SUS316	127	45	40	28	90	52	34	70	40	49	17	19	M4
TM-8114-2-L / R		109	40	35	24	80	50	25	52	34	43	14	17	M4
TM-8114-3-L / R		98	32	32	23	65	50	22	43	35	36	14	18	M4
TM-8114-4-L / R		84	30	30	20	60	45	20	40	32	35	13	14.5	M4
TM-8114-5-L / R		68	30	30	20	55	45	17	37	32	28	12.5	14.5	M4

冷凍庫把手

TM-0512

Freezer handle



商品介紹:

- 座子高度可調，適合大部分門板的安裝
- 內置彈簧結構，方便開啟和關閉
- 材質:鋅合金
- 表面處理:鍍亮鉻
- 用途:冷凍設備、冷藏櫃、烤箱等

Product description:

- Seat height adjustable for most door panels
- Built-in spring structure for easy opening and closing
- Material: Zinc alloy
- Surface treatment: Bright chrome plating
- Uses: Freezer, refrigerator, oven, etc.

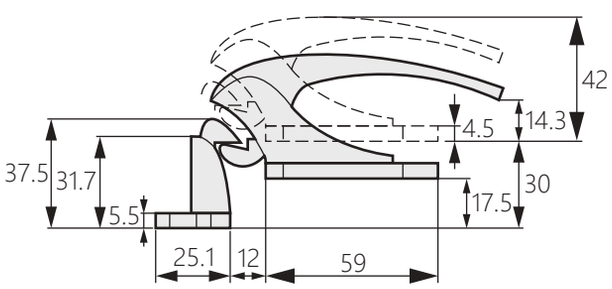

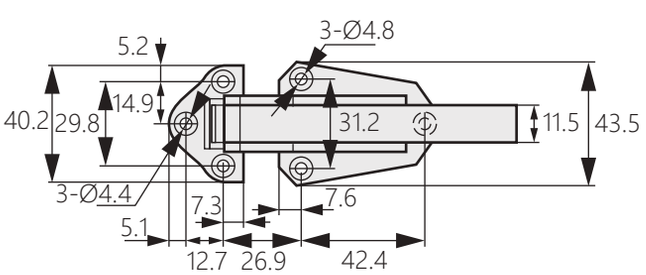

不鏽鋼門把手

TM-8115

Stainless steel door handle



商品介紹:

- 最大靜載荷:100kg
- 材質:不鏽鋼304.316
- 表面處理:鏡光
- 用途:商業廚具,食品機械,工業設備等

Product description:

- MAX Load weight: 100kg
- Material: Stainless steel 304.316
- Surface treatment: Mirror poloshing
- Uses: Commercial kitchen equipment, food machiney, industrial equipment,etc.

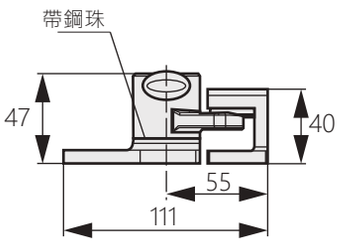

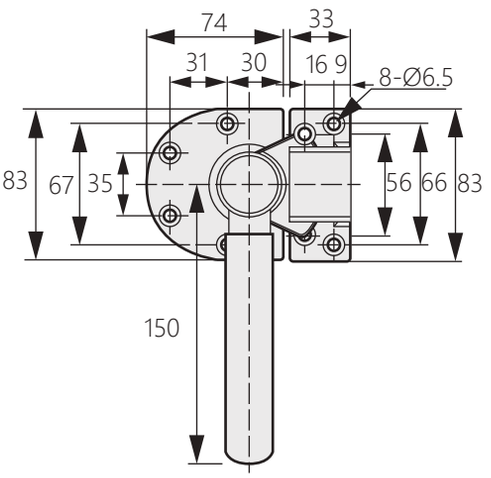

商品型號	樣式
TM-8115-1	有膠套
TM-8115-2	無膠套

不鏽鋼門把手

TM-8117

Stainless steel door handle



商品介紹:

- 最大靜載荷:100KG
- 材質:不鏽鋼304.316
- 表面處理:鏡光
- 用途:商業廚具,食品機械,工業設備等

Product description:

- MAX Load weight: 100kg
- Material: Stainless stainless steel 304.316
- Surface treatment: Mirror poloshing
- Uses: Commercial kitchen equipment,food machiney, industrial equipment,etc.

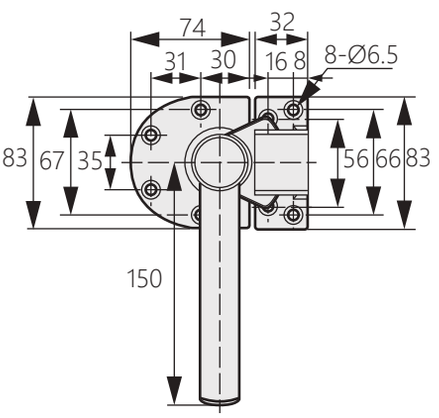

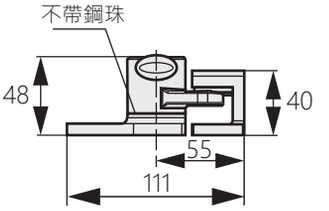

不鏽鋼迫緊手柄

Stainless steel pressing handle

TM-501



商品介紹:

- ■通過調節座子可實現密閉壓縮門功能
- ■材質:不鏽鋼（SUS304）
- ■表面處理:鏡面拋光
- ■用途:中大型有密閉要求的箱體設備，如高底溫試驗箱，冷庫醫用箱等

Product description:

- ■Closed compression door function can be achieved by adjusting the seat.
- ■Material: Stainless steel (SUS304)
- ■Surface treatment: Mirror polishing
- ■Uses: Medium and large box equipment with sealing requirements, such as high bottom temperature test box, cold storage medical box, etc.

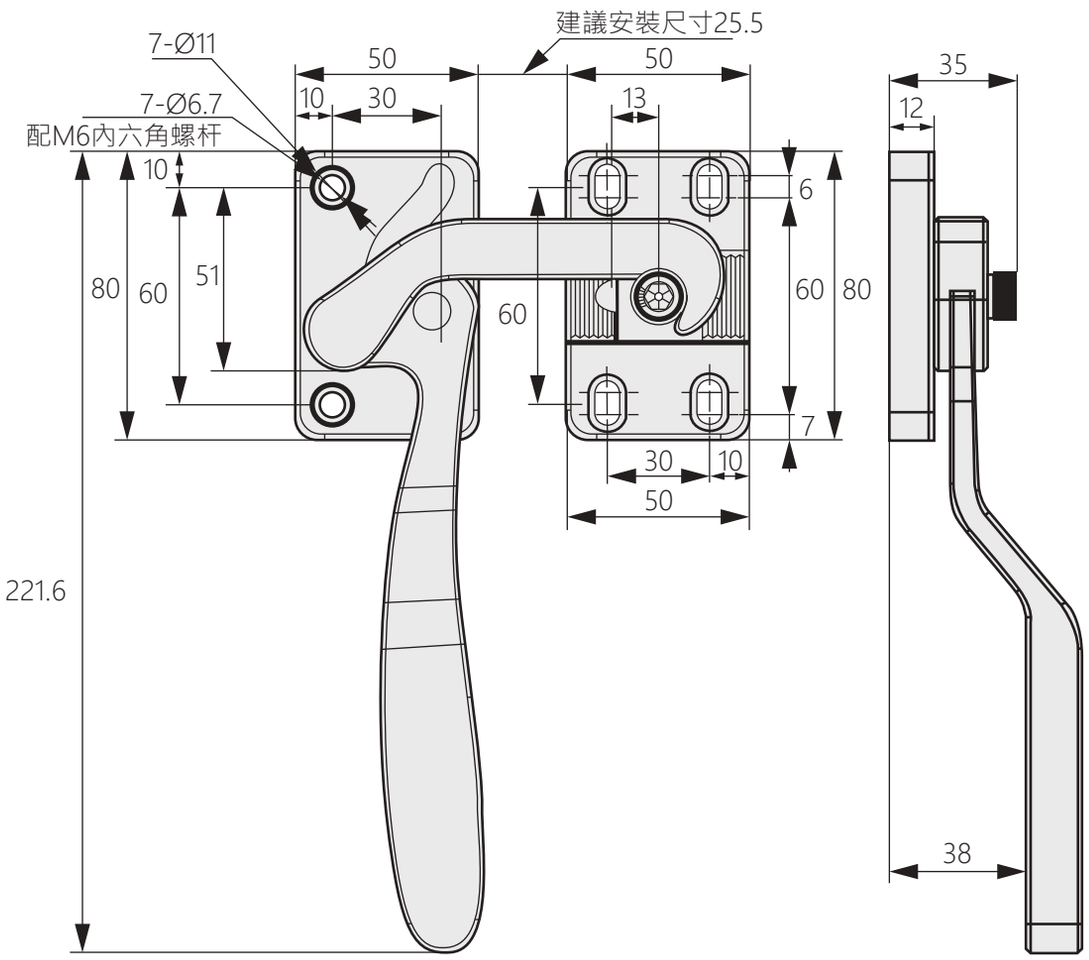

商品型號	樣式
TM-501-L	左開
TM-501-R	右開

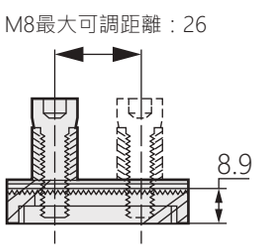

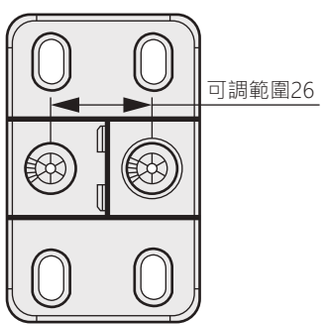

工業機罩靜音箱鎖

Industrial hood mute box lock

TM-124



商品介紹:

- 平面型手柄，帶鎖芯鎖定
- 採用單點鎖定形式
- 為了提高防塵性，鎖孔處附有防塵蓋
- 材質:冷軋鋼板（SPCC）
- 表面處理:黑色烤漆
- 用途:工程車、特種車、震動設備等
- 備註:為確保產品經久耐用，請定期在轉動部位上塗抹潤滑油

Product description:

- Flat handle with lock cylinder lock
- Using single point lock
- In order to improve dust resistance, a dust cover is attached to the keyhole
- Material: Cold rolled steel plate (SPCC)
- Surface treatment: Black paint
- Uses: Engineering vehicles, special vehicles, vibration equipment, etc.
- Note: To ensure the durability of the product, please regularly apply lubricant to the rotating parts.

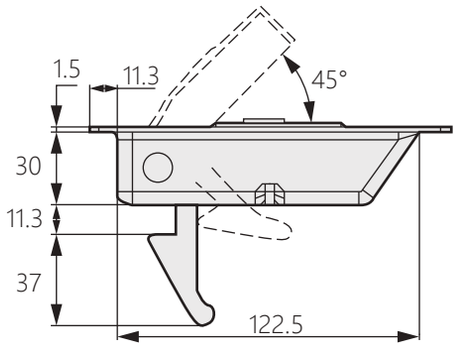

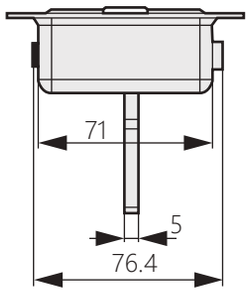

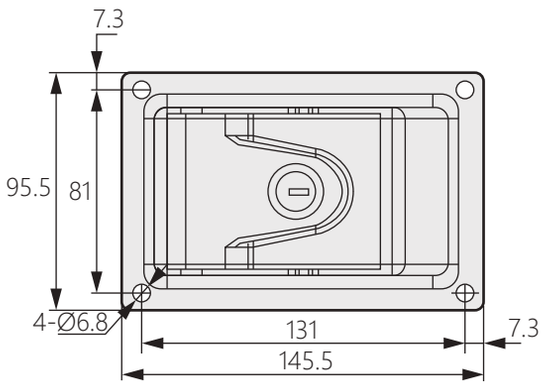

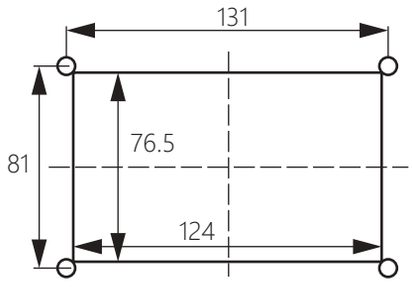

開孔尺寸

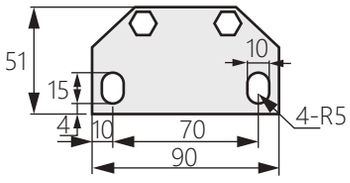

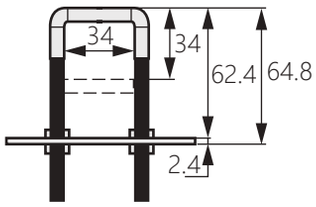

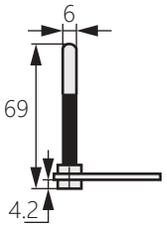

工業機罩靜音箱鎖

Industrial hood mute box lock

TM-125



商品介紹:

- ■平面型手柄，帶鎖芯鎖定
- ■採用單點鎖定形式
- ■為了提高防塵性，鎖孔處附有防塵蓋
- ■材質:冷軋鋼板（SPCC）
- ■表面處理:黑色烤漆
- ■用途:工程車、特種車、震動設備等
- ■備註:為確保產品經久耐用，請定期在轉動部位上塗抹潤滑油

Product description:

- ■Flat handle with lock cylinder lock
- ■Using single point lock
- ■In order to improve dust resistance, a dust cover is attached to the keyhole
- ■Material: Cold rolled steel plate (SPCC)
- ■Surface treatment: Black paint
- ■Uses: Engineering vehicles, special vehicles, vibration equipment, etc.
- ■Note: To ensure the durability of the product, please regularly apply lubricant to the rotating parts.

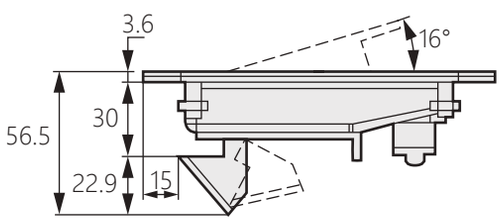

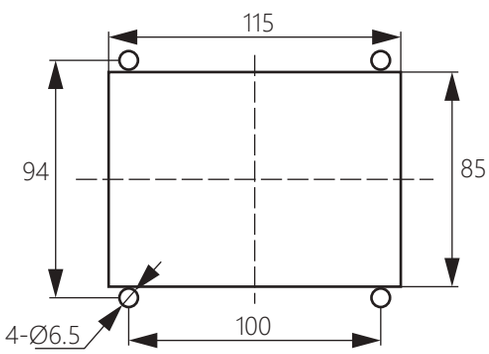

開孔尺寸

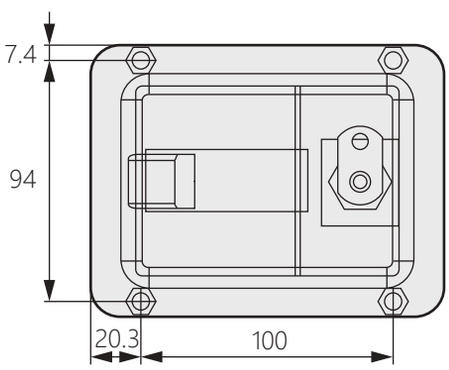

商品型號	固定
TM-125-1	內固定
TM-125-2	外固定

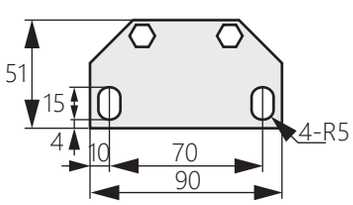

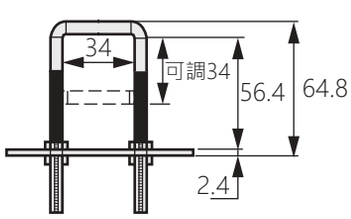

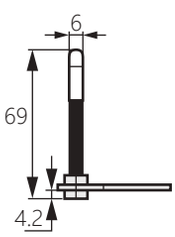

不鏽鋼機罩鎖

TM-128

Stainless steel hood lock



商品介紹:

- 平面型手柄，帶鎖芯鎖定
- 內置彈簧結構，方便開啟和關閉
- 材質:不鏽鋼(SUS304)
- 表面處理:鏡面拋光
- 用途:改裝車、特種車、振動設備等

Product description:

- Flat handle with lock cylinder lock
- Built-in spring structure for easy opening and closing
- Material: Stainless steel 304
- Surface treatment: Mirror polishing
- Uses: Modified cars, special cars, vibration equipment, etc.

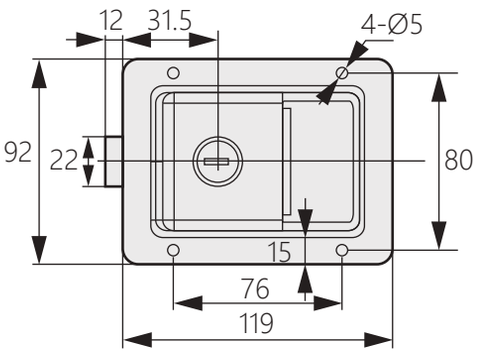

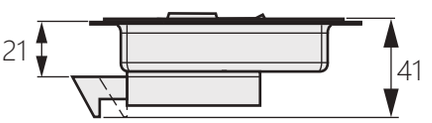

安裝示意圖

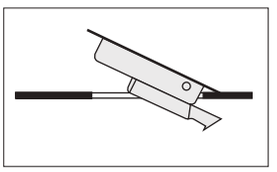

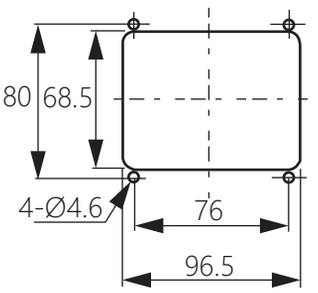

開孔尺寸

小型平面閘式門扣

TM-729

Paddle Latch



商品介紹:

- 堅固設計以及結構使這個門鎖非常適合用於工業以及車輛上，推入關閉，拉起閘板開啟，單孔快速安裝
- 材質:不鏽鋼304
- 表面處理:髮絲紋拋光
- 用途:配分電盤、機械設備、車輛、震動機台

Product description:

- Rugged design and construction make this latche well suited for use in industrial applications and offhighway vehicles.Push to close & Pull to open, single hole installation,concealed mounting.
- Material: Stainless Steel 304
- Surface treatment: Hair-Line Surface Treatment
- Uses: Car, Control Panel, Machinery equipment and various kinds of vibrations object.

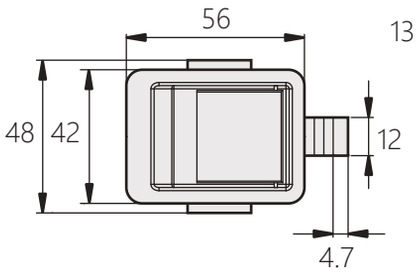

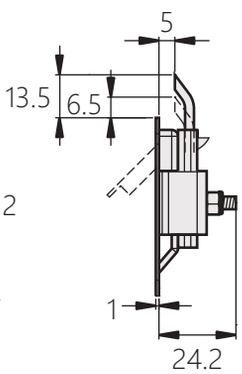

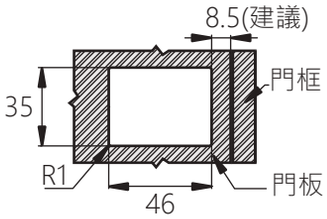

安裝示意圖

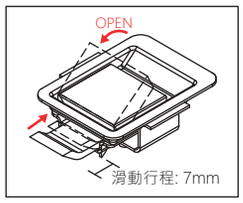

平面盒鎖 TM-132

Flat box lock



商品介紹:
- ■最大靜載荷:60kg
- ■材質:不鏽鋼304
- ■表面處理:鏡光
- ■用途:汽車車廂、機箱機櫃、冷藏車箱、集裝箱、船舶、製冷設備、機械設備等

Product description:
- ■MAX Load weight: 60kg
- ■Material: Stainless steel 304
- ■Surface treatment: Mirror poloshing
- ■Uses: Truck carriage,cabinet,freezing storage, container,vessel,refrigerating apparatus,mechanical equipment,etc.

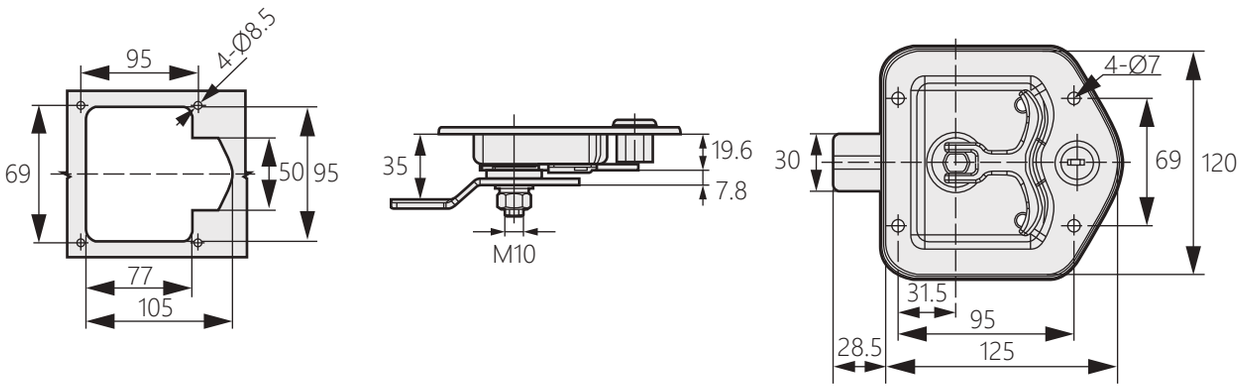

平面盒鎖 TM-337

Flat box lock



商品介紹:
- ■最大靜載荷:60kg
- ■材質:不鏽鋼304
- ■表面處理:鏡光
- ■用途:汽車車廂、機箱機櫃、冷藏車箱、集裝箱、船舶、製冷設備、機械設備等
- ■備註:此為訂製品

Product description:
- ■MAX Load weight: 60kg
- ■Material: Stainless steel 304
- ■Surface treatment: Mirror poloshing
- ■Uses: Truck carriage,cabinet,freezing storage, container,vessel,refrigerating apparatus,mechanical equipment,etc.
- ■Note: This is an order product

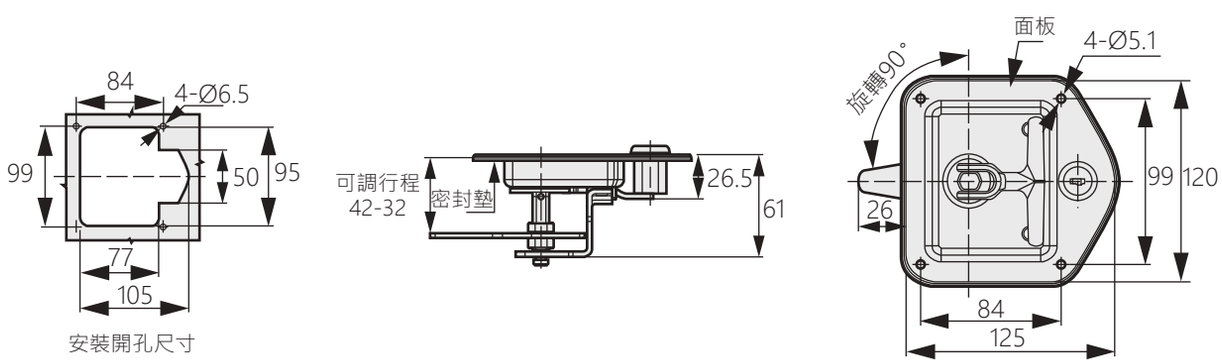

平面盒鎖 TM-135

Flat box lock



商品介紹:
- 最大靜載荷:60kg
- 材質:不鏽鋼304
- 表面處理:鏡光
- 用途:汽車車廂、機箱機櫃、冷藏車箱、集裝箱、船舶、製冷設備、機械設備等
- 備註:此為訂製品

Product description:
- MAX Load weight: 60kg
- Material: Stainless steel 304
- Surface treatment: Mirror poloshing
- Uses: Truck carriage,cabinet,freezing storage, container,vessel,refrigerating apparatus,mechanical equipment,etc.
- Note: This is an order product

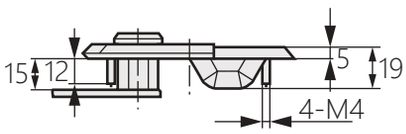

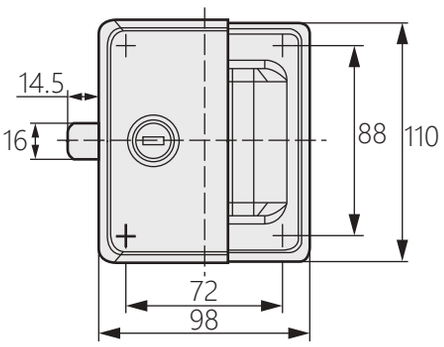

平面盒鎖 TM-136

Flat box lock

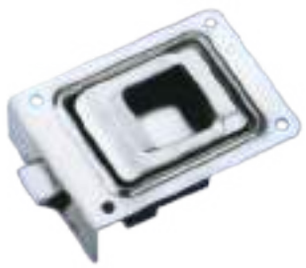

商品介紹:
- 最大靜載荷:60kg
- 材質:不鏽鋼304
- 表面處理:拋光,電鍍等
- 用途:汽車車廂、機箱機櫃、冷藏車箱、集裝箱、船舶、製冷設備、機械設備等
- 備註:此為訂製品

Product description:
- MAX Load weight: 60kg
- Material: Stainless steel 304
- Surface treatment: Poloshing,electroplating,etc
- Uses: Truck carriage,cabinet,freezing storage, container,vessel,refrigerating apparatus,mechanical equipment,etc.
- Note: This is an order product

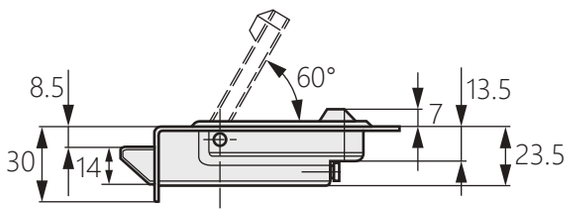

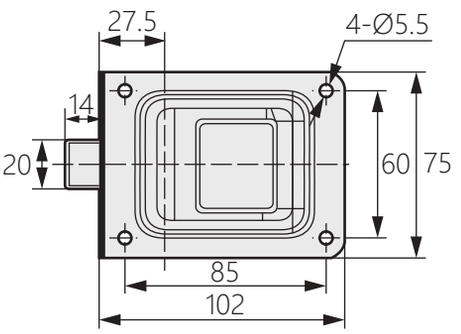

平面盒鎖 TM-137

Flat box lock



商品介紹:
- ■最大靜載荷:60kg
- ■材質:不鏽鋼304
- ■表面處理:拋光,電鍍等
- ■用途:汽車車廂、機箱機櫃、冷藏車箱、集裝箱、船舶、製冷設備、機械設備等
- ■備註:此為訂製品

Product description:
- ■MAX Load weight: 60kg
- ■Material: Stainless steel 304
- ■Surface treatment: Poloshing,electroplating,etc
- ■Uses: Truck carriage,cabinet,freezing storage, container,vessel,refrigerating apparatus,mechanical equipment,etc.
- ■Note: This is an order product

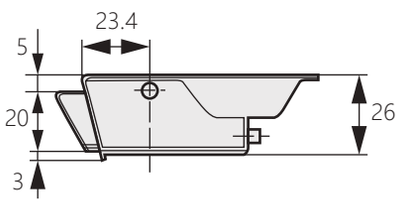

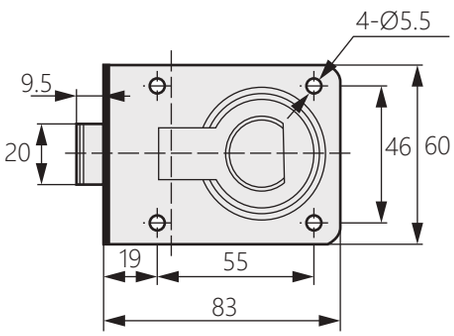

平面盒鎖 TM-133

Flat box lock



商品介紹:
- ■最大靜載荷:60kg
- ■材質:不鏽鋼304
- ■表面處理:鏡光
- ■用途:汽車車廂、機箱機櫃、冷藏車箱、集裝箱、船舶、製冷設備、機械設備等

Product description:
- ■MAX Load weight: 60kg
- ■Material: Stainless steel 304
- ■Surface treatment: Mirror poloshing
- ■Uses: Truck carriage,cabinet,freezing storage, container,vessel,refrigerating apparatus,mechanical equipment,etc.

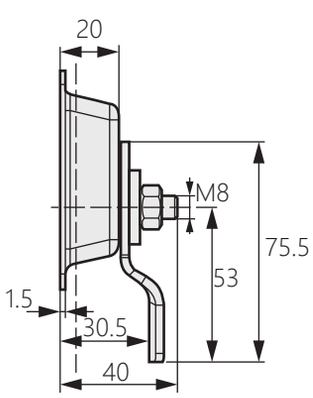

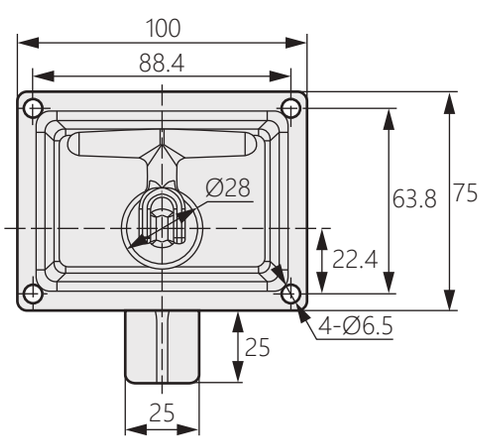

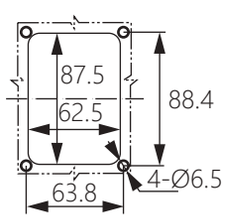

安裝開孔尺寸

平面盒鎖 TM-138

Flat box lock

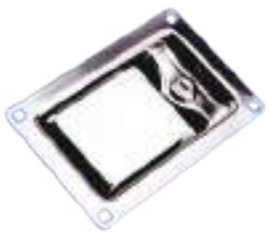

商品介紹:
- ■最大靜載荷:60kg
- ■材質:不鏽鋼304
- ■表面處理:拋光,電鍍等
- ■用途:汽車車廂、機箱機櫃、冷藏車箱、集裝箱、船舶、製冷設備、機械設備等

Product description:
- ■MAX Load weight: 60kg
- ■Material: Stainless steel 304
- ■Surface treatment: Poloshing,electroplating,etc
- ■Uses: Truck carriage,cabinet,freezing storage, container,vessel,refrigerating apparatus,mechanical equipment,etc.

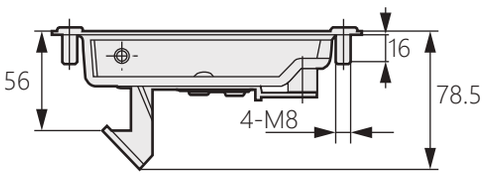

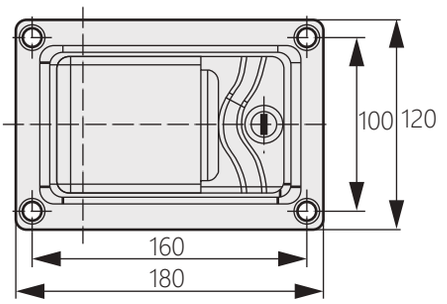

平面盒鎖 TM-139

Flat box lock

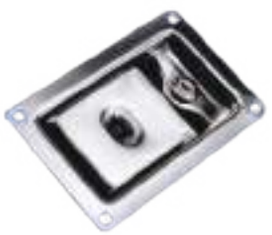

商品介紹:
- ■最大靜載荷:60kg
- ■材質:不鏽鋼304
- ■表面處理:拋光,電鍍等
- ■用途:汽車車廂、機箱機櫃、冷藏車箱、集裝箱、船舶、製冷設備、機械設備等
- ■備註:此為訂製品

Product description:
- ■MAX Load weight: 60kg
- ■Material: Stainless steel 304
- ■Surface treatment: Poloshing,electroplating,etc
- ■Uses: Truck carriage,cabinet,freezing storage, container,vessel,refrigerating apparatus,mechanical equipment,etc.
- ■Note: This is an order product

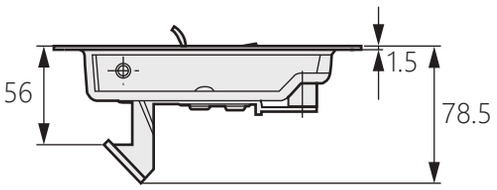

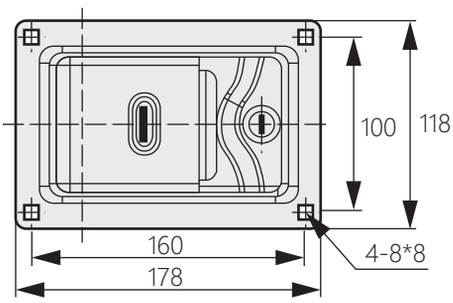

震動設備鎖 TM-140

Vibration device lock



商品介紹:

- ■平面型手柄，帶鎖芯鎖定
- ■三點鎖閉結構，鎖芯帶防塵蓋
- ■材質:冷軋鋼板（SPPC）
- ■表面處理:黑色烤漆
- ■用途:特種車、改裝車、震動設備等
- ■備註:為確保產品經久耐用，請定期在轉動部位上塗抹潤滑油

Product description:

- ■Flat handle with lock cylinder lock
- ■Three-point lock structure, lock core with dust cover
- ■Material: Cold rolled steel plate (SPPC)
- ■Surface treatment: Black paint
- ■Uses: Special vehicles, modified vehicles, vibration equipment, etc.
- ■Note: To ensure the durability of the product, please regularly apply lubricant to the rotating parts.

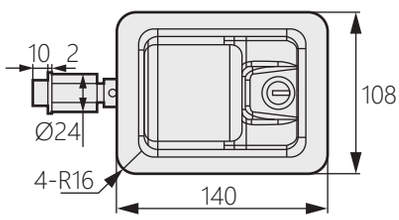

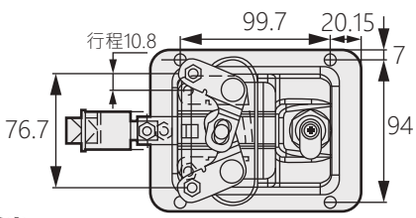

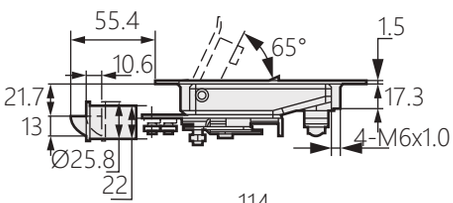

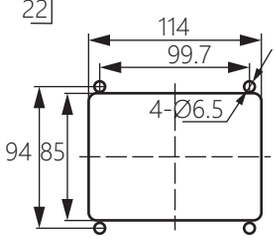

開孔尺寸

防塵機罩鎖 TM-326

Dust hood lock



商品介紹:

- ■抗震動、抗衝擊等性能強
- ■採用單點鎖定形式
- ■為了提高防塵性，鎖孔處附有防塵蓋
- ■材質:鋅合金(ZDC)
- ■表面處理:黑色烤漆、銀色噴塗
- ■用途:工程車、特種車、震動設備

Product description:

- ■Strong resistance to vibration and impact
- ■Single point lock
- ■In order to improve dust resistance, a dust cover is attached to the keyhole
- ■Material: Zinc Alloy (ZDC)
- ■Surface treatment: Black paint, silver spray
- ■Uses: Inspection entrance and small doors

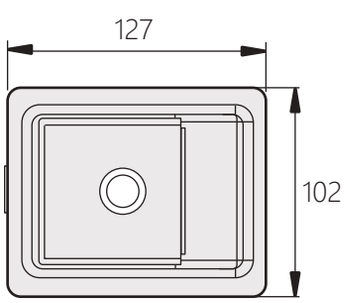

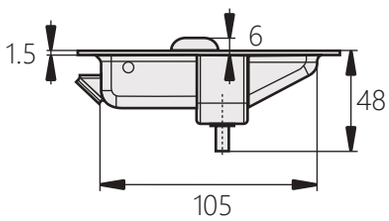

開孔尺寸

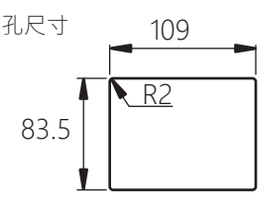

商品型號	表面處理
TM-326-1	黑色烤漆
TM-326-2	銀色噴塗

鋅合金機罩鎖

Zinc alloy hood lock

TM-142



商品介紹:

- ■平面型手柄，帶鎖芯鎖定
- ■鎖芯帶有防塵蓋
- ■單點鎖閉結構
- ■材質:鋅合金（ZDC）
- ■表面處理:黑色烤漆
- ■用途:特種車、改裝車、震動設備等
- ■備註:為確保產品經久耐用，請定期在轉動部位上塗抹潤滑油

Product description:

- ■Flat handle with lock cylinder lock
- ■Cylinder with dust cover
- ■Single-point locking structure
- ■Material: Zinc alloy (ZDC)
- ■Surface treatment: Black paint
- ■Uses: Special vehicles, modified vehicles, vibration equipment, etc.
- ■Note: To ensure the durability of the product, please regularly apply lubricant to the rotating parts.

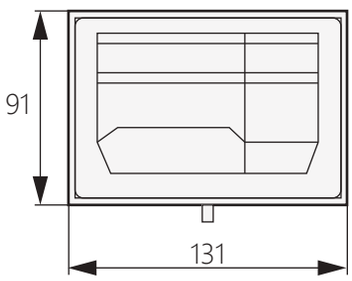

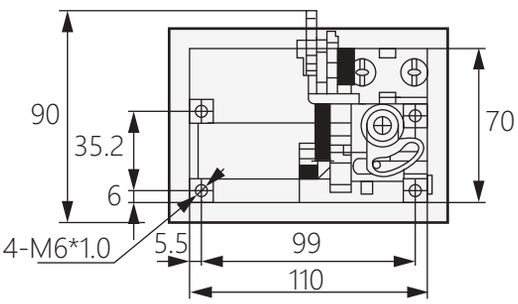

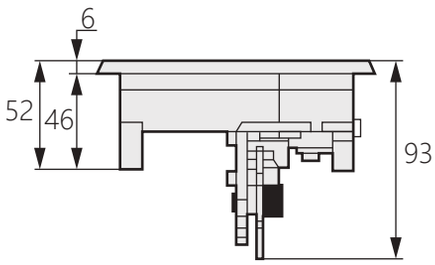

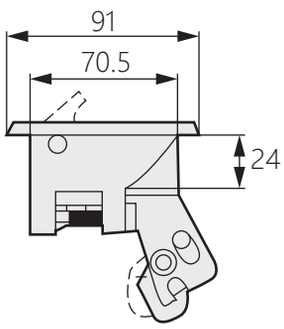

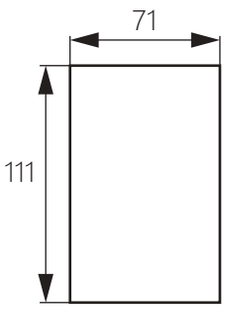

開孔尺寸

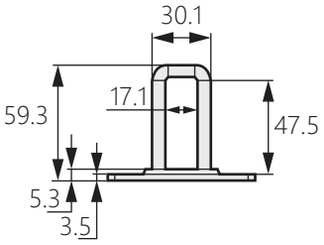

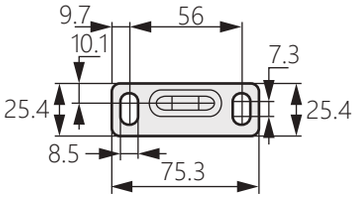

隱形橫式把手

Invisible horizontal handle

TM-171



商品介紹:

- 扭力大，開啟及關閉輕鬆
- 材質:鋅合金 (ZDC)
- 表面處理:黑色粉末噴塗、鋼、鍍鋅
- 用途:烤箱、試驗箱、密封性能好的箱體

Product description:

- Large torque, easy to open and close
- Material: Zinc Alloy (ZDC)
- Surface treatment: Black powder coating, steel, galvanizing
- Uses: Oven, test box, good sealing performance.

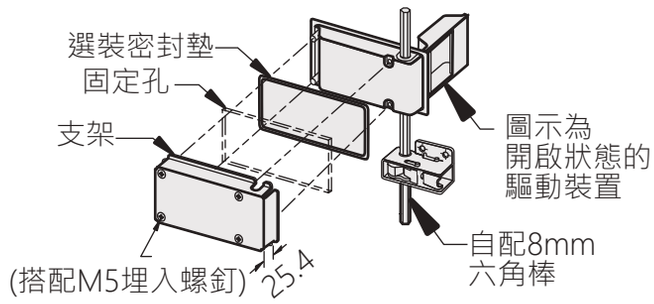

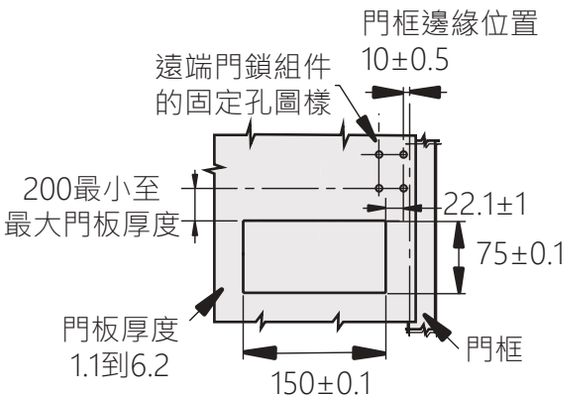

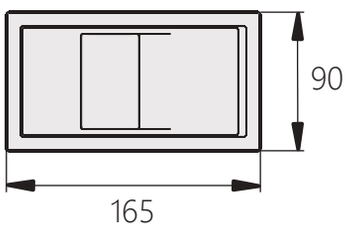

商品型號	
有鎖	無鎖
TM-170	TM-171

壓縮門扣

Compression button

TM-80&TM-90


【TM-80】


【TM-90】

商品介紹:

- 靠六角棒帶動壓縮鎖緊門體
- 不可調節鎖舌可頻繁使用且承受力更強
- 材質:不鏽鋼+鐵、鋅合金+鐵
- 表面處理:鍍鋅
- 用途:烤箱、試驗箱、密封要求好的箱體

Product description:

- Compress the locking door by a hexagonal rod.
- Non-adjustable locking tongues are frequently used and more resistant.
- Material: Stainless steel + iron, zinc alloy + iron
- Surface treatment: Zinc plating
- Uses: Oven, test box, sealed box

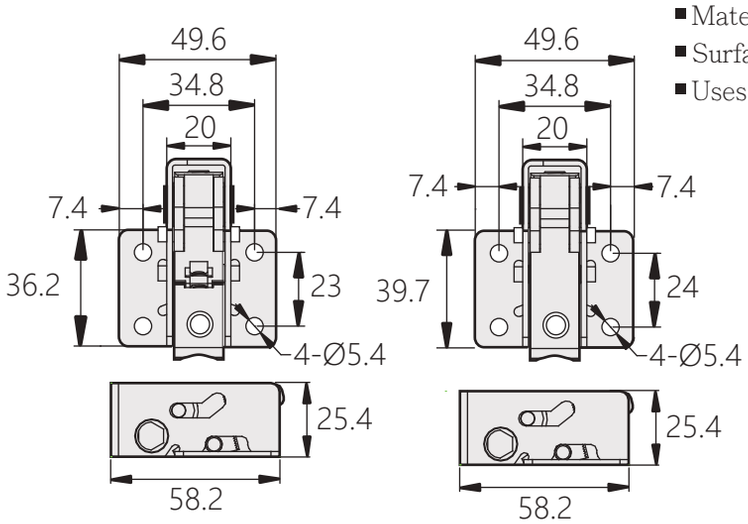

商品型號	鎖舌	材質
TM-80-1	短	不鏽鋼+鐵
TM-80-2	短	鋅合金+鐵
TM-90	長	不鏽鋼+鐵

橫式把手

TM-270

Handle Lack



商品介紹:

- 具有壓縮迫緊功能
- 左右開門兼用
- 材質:鋅合金(ZDC)
- 表面處理:黑沙面
- 用途:烤箱、試驗箱及密封性能好的箱體
- 備註:需自配8mm六角棒，必須與其它配件配套使用

Product description:

- With compression and compression function
- Open the door left and right
- Material: Zinc Alloy (ZDC)
- Surface treatment: Black sand surface
- Uses: Oven, test box and box with good sealing performance.
- Note: Need to be equipped with 8mm hexagonal rod, must be used with other accessories.

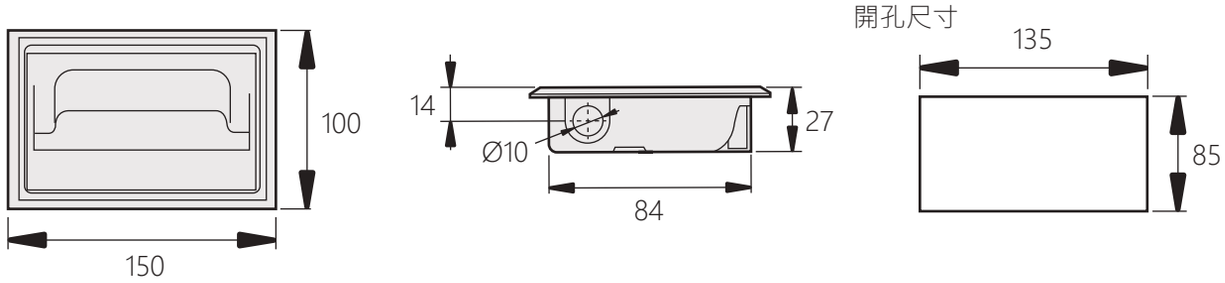

機罩鎖

TM-122

Hood lock



商品介紹:

- 可調節鎖點高度，對箱體有壓縮迫緊功能
- 防水防塵
- 材質:主體尼龍，配件鋅合金
- 表面處理:黑色
- 用途:工程車、特種車、靜音發電機

Product description:

- Adjustable lock point height, with compression and compression function on the box.
- Waterproof and dustproof, beautiful appearance
- Material: Main body nylon, Zinc alloy parts
- Surface treatment: Black
- Uses: Engineering vehicles, special vehicles, silent generators.

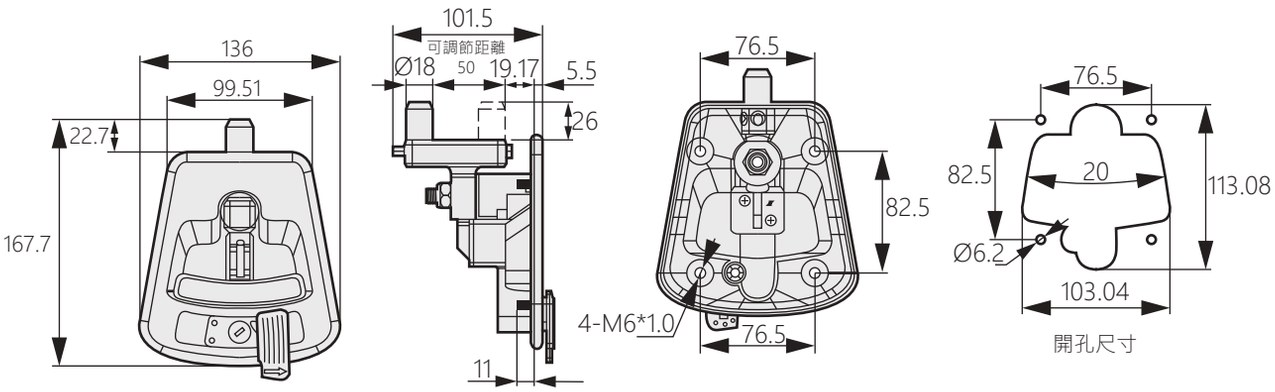

小型密閉把手

TM-150

Small closed handle



商品介紹:

- 輕便，更適合安裝於小型箱體的門上
- 具有壓縮迫緊功能
- 材質:鋅合金(ZDC)
- 表面處理:黑色烤漆
- 用途:烤箱、試驗箱、環境設備及密封性要求高的箱體

Product description:

- Lightweight, more suitable for installation on small cabinet doors
- With compression and compression function
- Material: Zinc Alloy (ZDC)
- Surface treatment: Black paint
- Uses: Oven, test chamber, environmental equipment and cabinets with high sealing requirements.

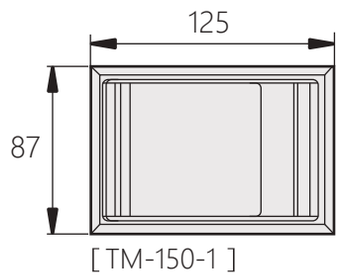

[TM-150-1]

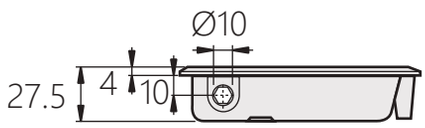

開孔尺寸

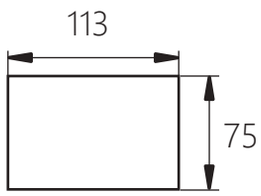

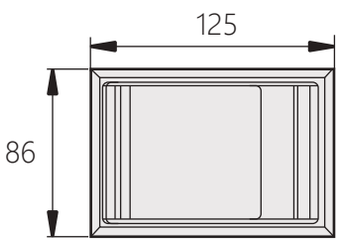

[TM-150-2]

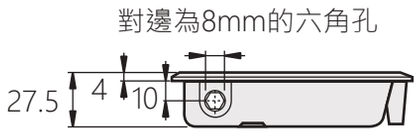

開孔尺寸

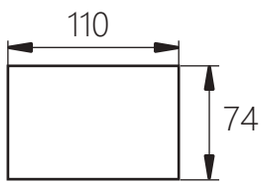

靜音箱鎖

TM-123

Silent box lock



商品介紹:

- 良好的防水性能
- 可推動門板碰撞關門
- 把手可翻起後旋轉，從而實現開門
- 表面處理:鍍亮鉻
- 材質:鋅合金(ZDC)
- 用途:工程車、特種車、振動機器及設備

Product description:

- Good waterproof performance
- Can push the door panel to close
- The handle can be turned up and rotated to open the door
- Surface treatment: Bright chrome plating
- Material: Zinc Alloy (ZDC)
- Uses: Engineering vehicles, special vehicles, vibration machines and equipment.

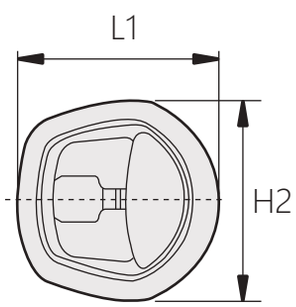

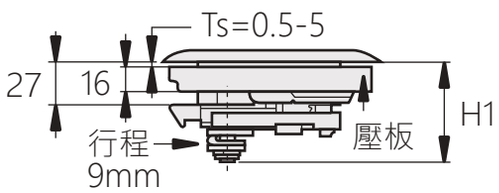

開孔尺寸

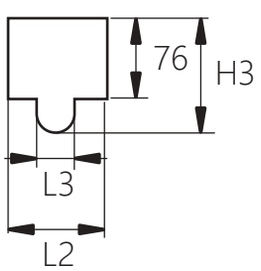

商品型號	L1	L2	L3	H1	H2	H3
TM-123-1	139.5	94	34	63.4	139	106
TM-123-2	120	90	24	62.5	120	90

平面型拉式門把

TM-318

Paddle Latch



商品介紹:

- 堅固設計以及結構使這個門鎖非常適合用於工業以及車輛上
- 拉動閘板，使鎖舌收縮7m.m，開啟門板。關門時只需推回即可
- 材質:鐵
- 用途:配分電盤、機械設備、車輛、震動機台

Product description:

- Rugged design and construction make this latche well suited for use in industrial applications and offhighway vehicles.
- Lift paddle to retract slide then open the door. Push door to close
- Material: Steel
- Surface treatment: Mirror surface buffing
- Uses: Car, Control Panel, Machinery equipment and various kinds of vibrations object.

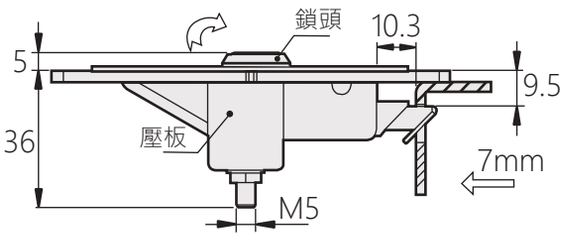

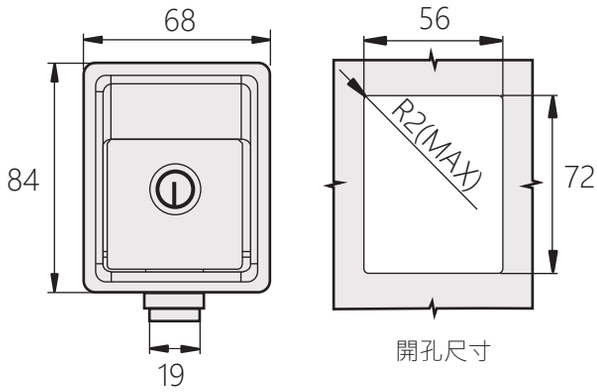

不鏽鋼控制面板鎖

TM-127

Stainless steel control panel lock



商品介紹:

- 平面型手柄，帶鎖芯鎖定
- 內置彈簧結構，方便開啟和關閉
- 材質:不鏽鋼SUS304
- 表面處理:鏡面拋光
- 用途:改裝車、特種車、震動設備等

Product description:

- Flat handle with lock cylinder lock
- Built-in spring structure for easy opening and closing
- Material: Stainless steel (SUS304)
- Surface treatment: Mirror polishing
- Uses: Modified cars, special cars, vibration equipment, etc.

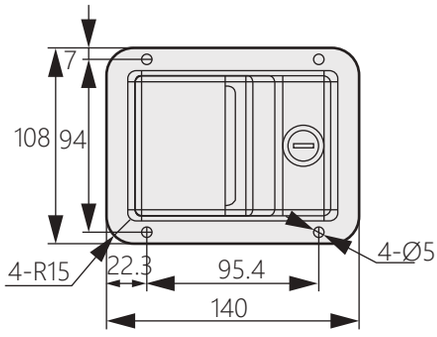

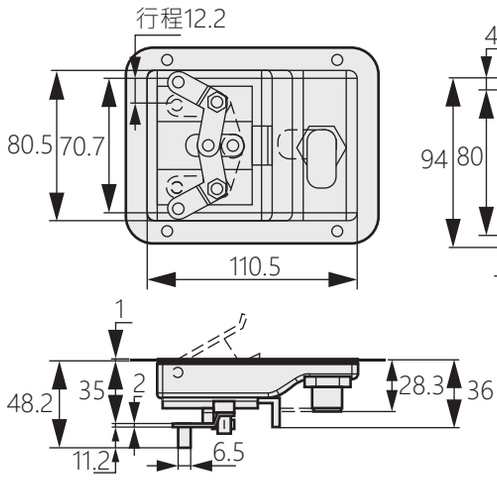

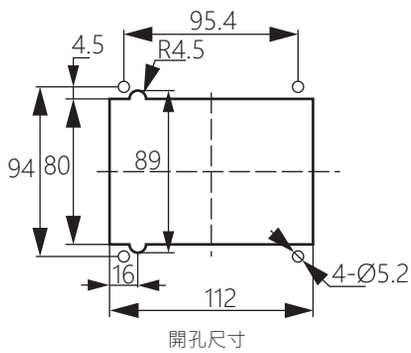

平面型把手

TM-325

Flat handle



商品介紹:

- 堅固設計以及結構使這個門鎖非常適合用於工業以及車輛上。拉動閘板，使鎖舌收縮7mm，開啟門板。關門時只需推回即可
- 材質:鐵
- 表面處理:黑色塗裝
- 用途:配分電盤、機械設備、車輛、震動機台

Product description:

- Rugged design and construction make this latche well suited for use in industrial applications and offhighway vehicles.Lift paddle to retract slide then open the door. Push door to close.
- Material: Steel
- Surface treatment: Black Powder Coated
- Uses: Car, Control Panel, Machinery equipment and various kinds of vibrations object.

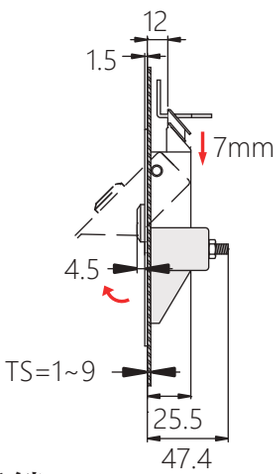

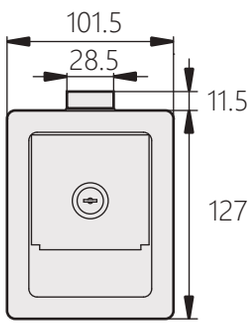

開孔尺寸

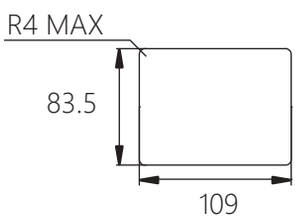

防震面板鎖

TM-141

Shockproof panel lock



商品介紹:

- 平面型手柄，帶鎖芯鎖定
- 鎖芯帶有防塵蓋
- 單點鎖閉結構
- 材質:鋅合金
- 表面處理:黑色烤漆
- 用途:特種車、改裝車、震動設備等

Product description:

- Flat handle with lock cylinder lock
- Cylinder with dust cover
- Single-point locking structure
- Material: Zinc alloy
- Surface treatment: Black paint
- Uses: Special vehicles, modified vehicles, vibration equipment, etc.

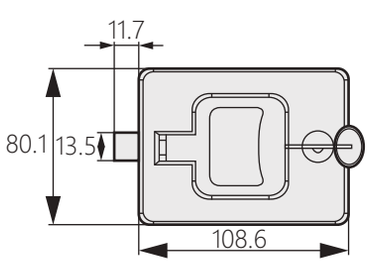

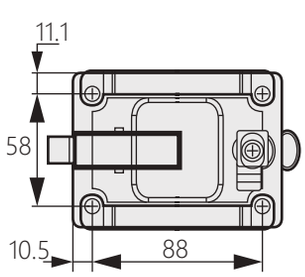

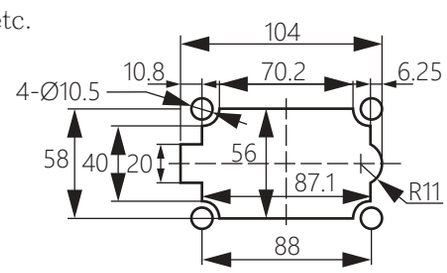

開孔尺寸

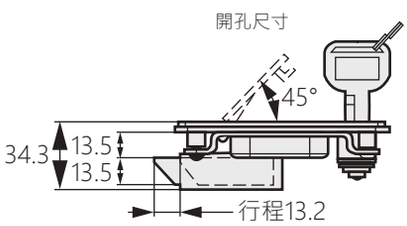

崁入式T 型手柄門鎖

T Handle Truck Lock

TM-350



商品介紹:

- 堅固設計以及結構使這個門鎖非常適合用於工業以及車輛上，T 型手柄方便抓握，以及埋入式的安裝設計
  防水設計:內部設置O 型環，外部使用防水墊片
- 材質:面板、門擋片、轉軸- 不鏽鋼
  手柄、鎖芯、防水蓋- 鋅合金
- 表面處理:面板- 鏡面拋光，手柄、防水蓋- 鍍鉻
- 用途:配分電盤、機械設備、車輛、震動機台

Product description:

- Rugged design and construction make this latche well suited for use in industrial applications and offhighway vehicles.
  The convenient handhold afforded by their folding T-handles is complemented by sleek, flush-mount design.
  Waterproof: Using O-ring inside and sheet packing.
- Material: Panel,Cam,Shaft-Stainless Steel
  Handle, lock, Cover-Zinc Alloy (ZDC)
- Surface treatment: Panel-Mirror surface buffing ; Handle, Cover-Electroplated With Chrome.
- Uses: Car, Control Panel, Machinery equipment and various kinds of vibrations object.

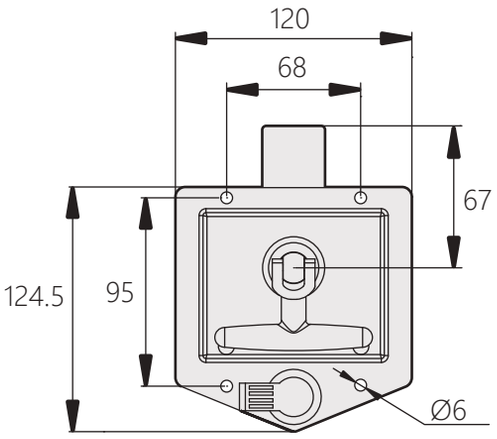

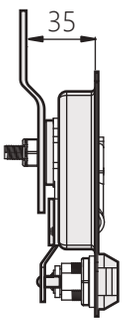

開孔尺寸

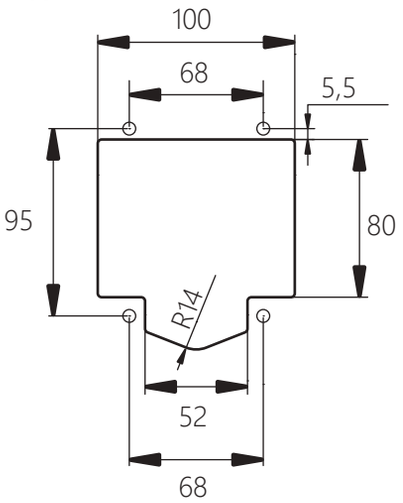

安裝示意圖

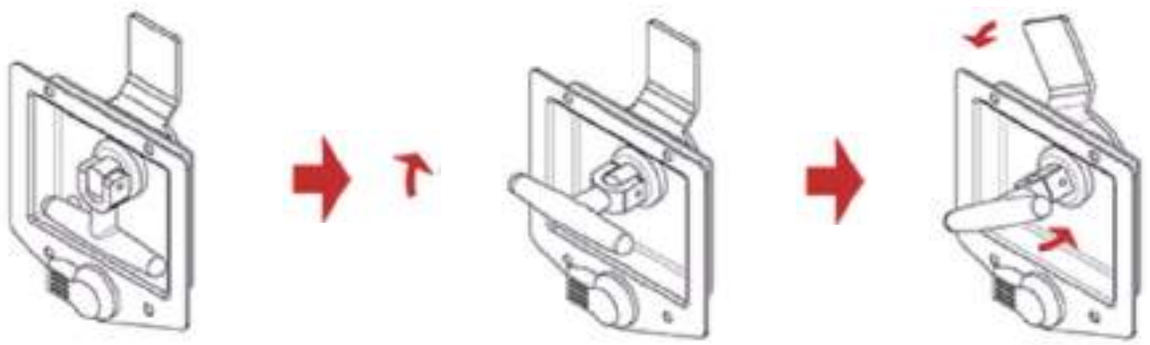

擋片式把手門鎖 TM-335

Baffle handle door lock



商品介紹:

- 材質:主體-不鏽鋼304、鎖蕊-鋅合金
- 用途:中大型門板

Product description:

- Material: Stainless steel 304-body ; Zinc alloy-lock
- Uses: Suitable for large equipment door

開孔尺寸

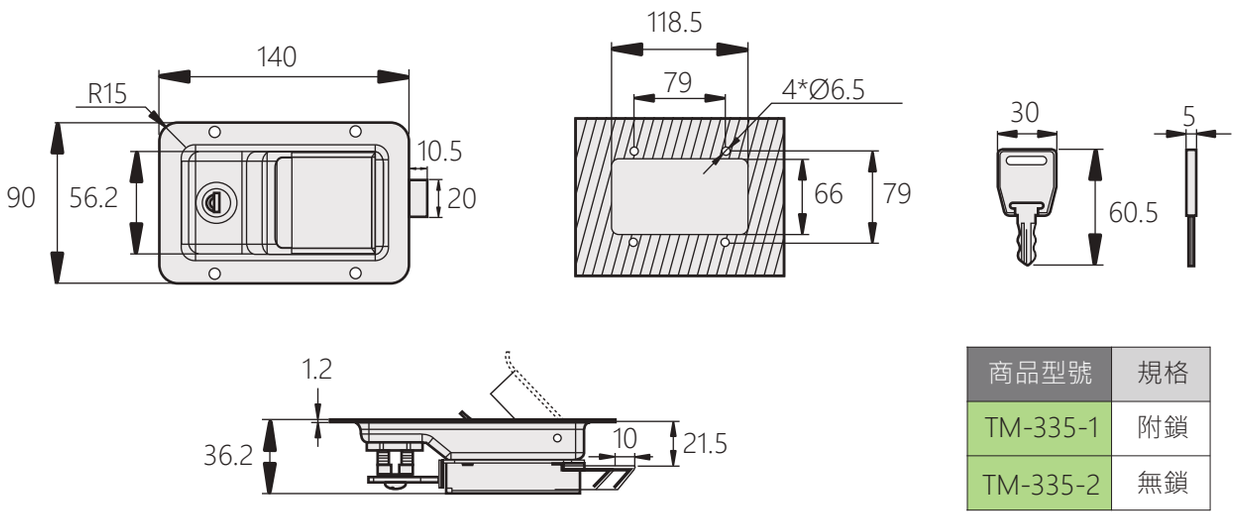

商品型號	規格
TM-335-1	附鎖
TM-335-2	無鎖

側箱門鎖 TM-071

Side box door lock



商品介紹:

- 外觀小巧，操作簡單
- 開啟簡單，具有良好的鎖定功能
- 可撞擊式關門和拉動手柄關門
- 左右兼用型
- 用單手指拉動手柄開啟
- 表面處理:鍍亮鉻
- 材質:鋅合金
- 用途:小型機箱、機箱機櫃、電配箱、控制側門

Product description:

- Small size and easy operation
- Easy to open, with good locking
- Impactable closing and pulling handles close
- Left and right
- Pull the handle on with a single finger
- Surface treatment: Bright chrome plating
- Material: Zinc alloy
- Uses: Small chassis, chassis cabinet, electrical distribution box, control side door.

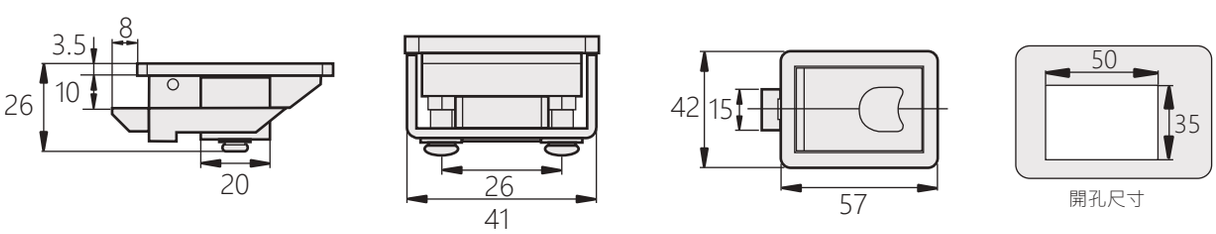

平面盒鎖 TM-338

Flat box lock



商品介紹:
- ■最大靜載荷:60kg
- ■材質:不鏽鋼304
- ■表面處理:鏡光
- ■用途:汽車車廂、機箱機櫃、冷藏車箱、集裝箱、船舶、製冷設備、機械設備等
- ■備註:此為訂製品

Product description:
- ■MAX Load weight: 60kg
- ■Material: Stainless steel 304
- ■Surface treatment: Mirror poloshing
- ■Uses: Truck carriage,cabinet,freezing storage, container,vessel,refrigerating apparatus,mechanical equipment,etc.
- ■Note: This is an order product

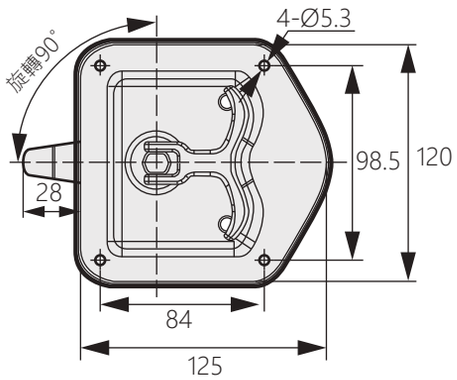

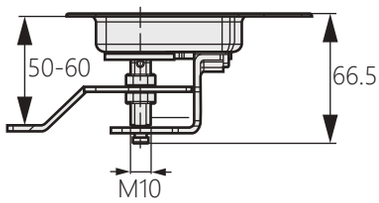

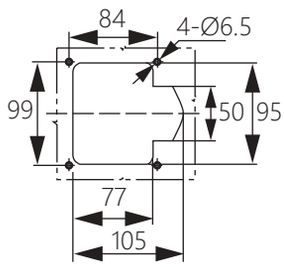

安裝開孔尺寸

平面盒鎖 TM-134

Flat box lock



商品介紹:
- ■材質:不鏽鋼304
- ■表面處理:鏡光
- ■最大靜載荷:60kg
- ■用途:汽車車廂、機箱機櫃、冷藏車箱、集裝箱、船舶、製冷設備、機械設備等

Product description:
- ■MAX Load weight: 60kg
- ■Material: Stainless steel 304
- ■Surface treatment: Mirror poloshing
- ■Uses: Truck carriage,cabinet,freezing storage, container,vessel,refrigerating apparatus,mechanical equipment,etc.

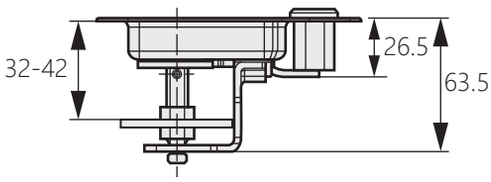

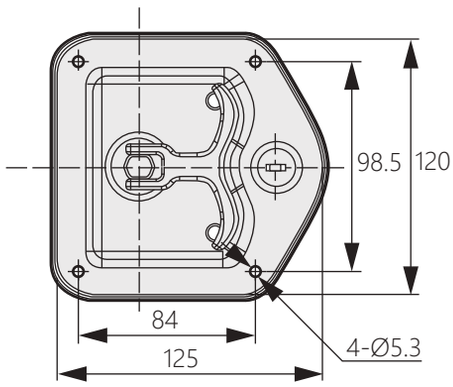

貨櫃鎖

TM-0415

Container lock



商品介紹:

- ■帶鎖芯可鎖定不被彈開，手柄包膠
- ■具有強力扣緊功能
- ■材質:不鏽鋼304
- ■表面處理:拋光及電解
- ■用途:特種設備車、冷凍車、製冷車
- ■備註:聯動桿根據實際所需長度自行配置

Product description:

- ■With lock cylinder can be locked without springing, handle is covered with plastic
- ■With strong fastening function
- ■Material: Stainless steel 304
- ■Surface treatment: Polishing and electrolytic
- ■Uses: Special equipment vehicles, refrigerated vehicles, refrigerated vehicles.
- ■Note: The linkage rod is configured by itself according to the actual required length.

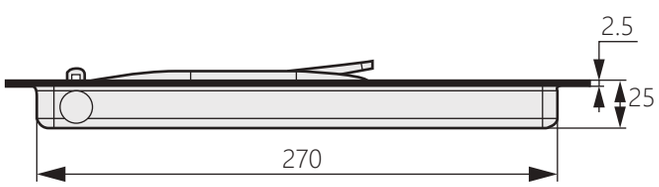

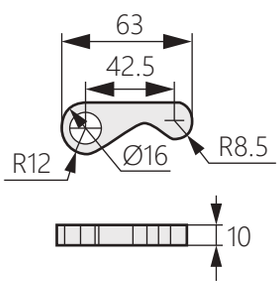

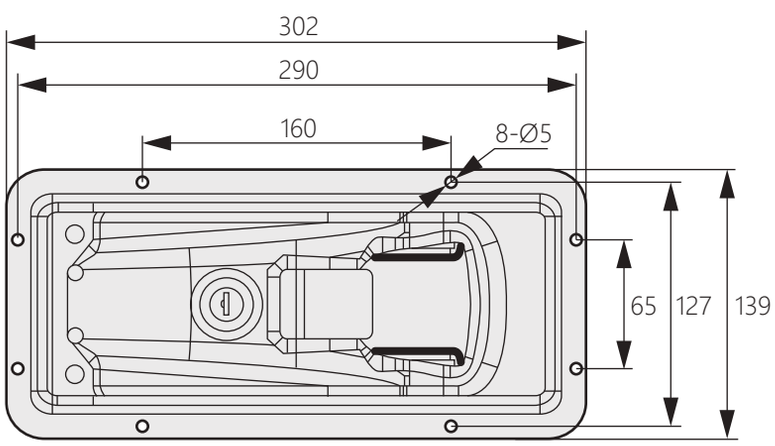

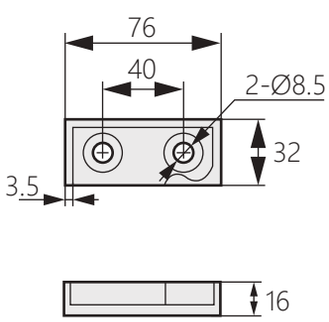

示意圖



嵌入式密閉門把手

Built-in closed door handle

TM-1894



商品介紹:

- ■嵌入式結構整體效果更美觀
- ■把手內部採用碰鎖方式，單觸即可實現開關
- ■把手下面紅色的指示器具有提醒操作者關門的功能，極具安全性
- ■材質:鋁合金
- ■表面處理:銀色噴塗
- ■用途:中小型試驗箱、冷藏保鮮車、特種設備等
- ■備註:連接管需自行購買，鎖鉤座請參考尺寸和訂貨號選配

Product description:

- ■The overall effect of the embedded structure is more beautiful.
- ■The inside of the handle adopts the lock lock method, and the switch can be realized with one touch.
- ■The red indicator under the handle has the function of reminding the operator to close the door, which is very safe.
- ■Material: Aluminum alloy
- ■Surface treatment: Silver spray
- ■Uses: Small and medium test chambers, refrigerated fresh-keeping vehicles, special equipment, etc.
- ■Note: The connecting pipe needs to be purchased by yourself. Please refer to the size and order number to select the lock hook seat.

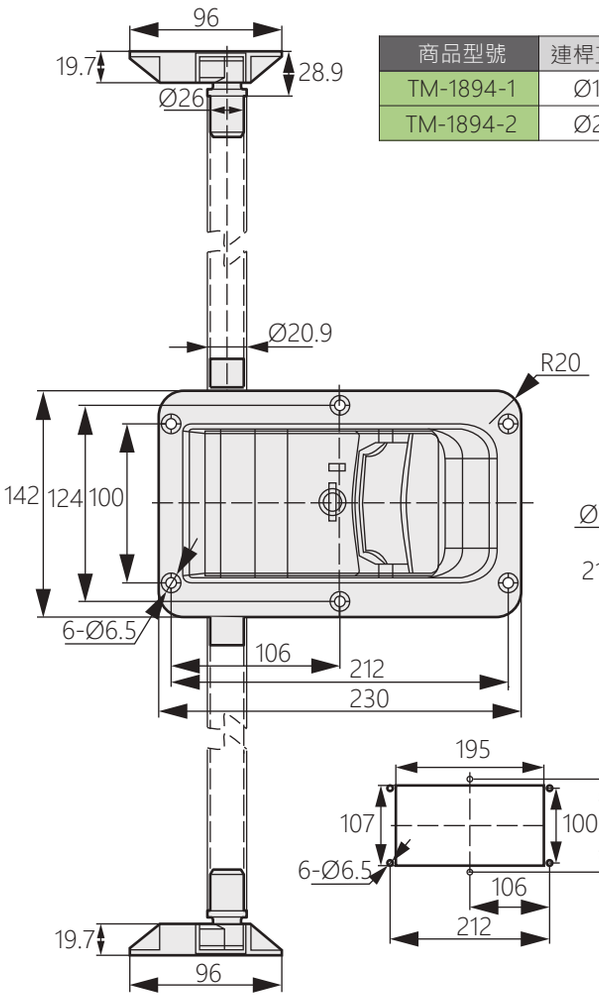

商品型號	連桿直徑
TM-1894-1	Ø12
TM-1894-2	Ø21

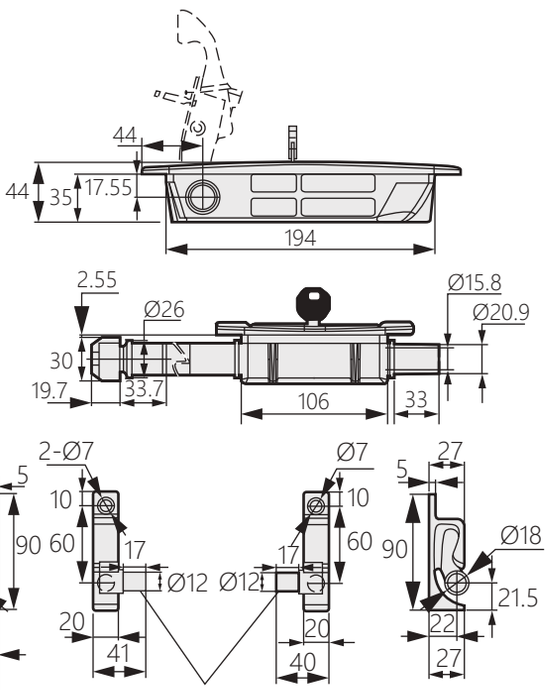

與連接管焊接
[TM-1894-1-1]

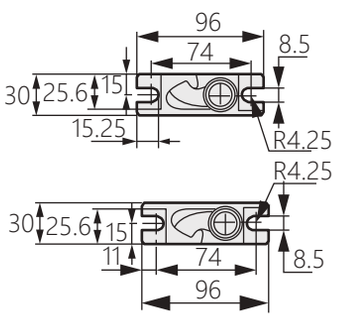

[TM-1894-2-1]

商品型號	品名
TH-1894-1-1	鉤座
TH-1894-2-1	鉤座

震動設備鎖

Vibration device lock

TM-5008



商品介紹:

- ■平面型手柄，帶鎖芯鎖定
- ■三點鎖閉結構，鎖芯帶防塵蓋
- ■材質:冷軋鋼板（SPCC）
- ■表面處理:黑色烤漆
- ■用途:特種車、改裝車、震動設備等
- ■備註:為確保產品經久耐用，請定期在轉動部位上塗抹潤滑油

Product description:

- ■Flat handle with lock cylinder lock
- ■Three-point lock structure, lock core with dust cover
- ■Material: Cold rolled steel plate (SPCC)
- ■Surface treatment: Black paint
- ■Uses: Special vehicles, modified vehicles, vibration equipment, etc.
- ■Note: To ensure the durability of the product, please regularly apply lubricant to the rotating parts.

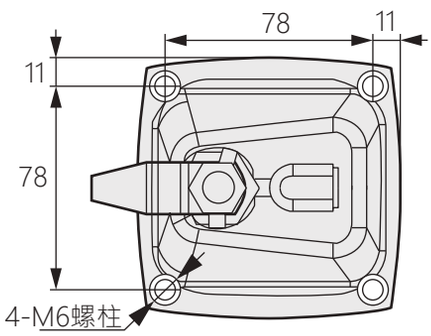

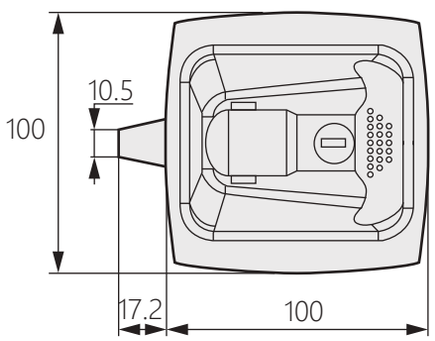

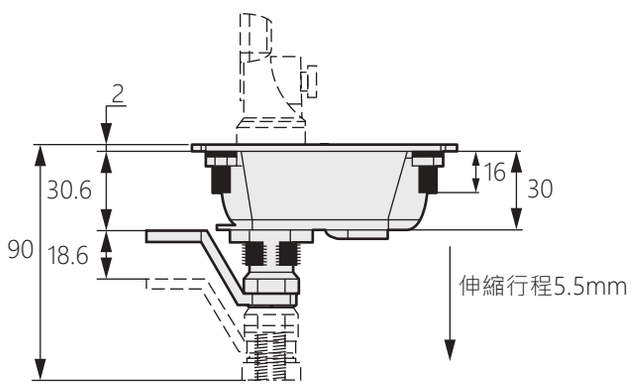

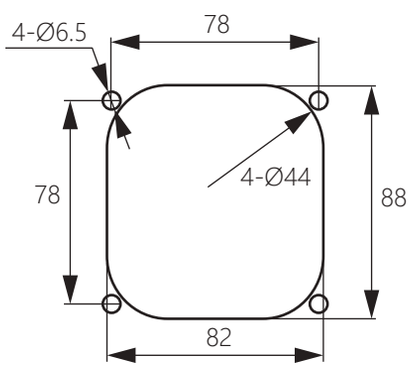

開孔尺寸

側門裝迫緊把手

TM-611-2

Side door with tight handle



商品介紹:

- 側門安裝，槓桿原理使門的開啟和關閉更輕鬆
- 適用於大型門的迫緊密封用途
- 材質:不鏽鋼（SUS304）
- 表面處理:鏡面拋光
- 用途:烤箱、恆溫恆濕箱、環境試驗箱等

Product description:

- Side door installation, lever principle makes opening and closing of the door easier.
- Suitable for large door compression sealing force
- Material: Stainless steel (SUS304)
- Surface treatment: Mirror polishing
- Uses: Oven, constant temperature and humidity chamber, environmental test chamber, etc.

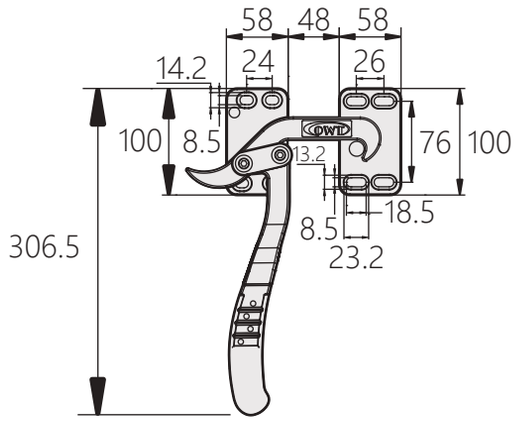

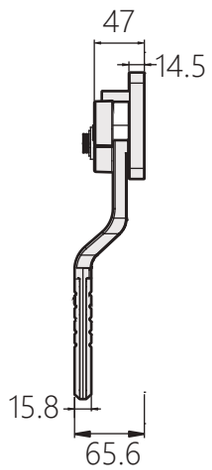

安裝示意圖

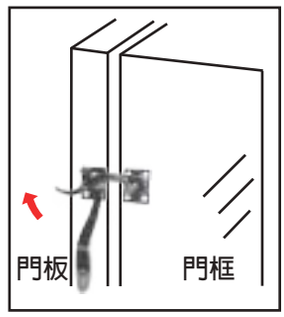

側門裝迫緊把手

TM-511-2

Side door with tight handle



商品介紹:

- 側門安裝，槓桿原理使門的開啟和關閉更輕鬆
- 底座可調節以調整密封條迫緊程度產品
- 材質:不鏽鋼（SUS304）
- 表面處理:鏡面拋光
- 用途:烤箱、恆溫恆濕箱、環境試驗箱等

Product description:

- Side door installation, lever principle makes opening and closing of the door easier.
- The base can be adjusted to adjust the tightness of the seal.
- Material: Stainless steel (SUS304)
- Surface treatment: Mirror polishing
- Uses: Oven, constant temperature and humidity chamber, environmental test chamber, etc.

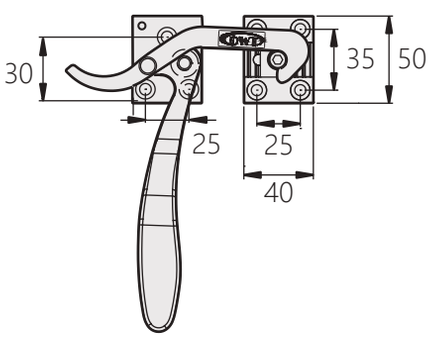

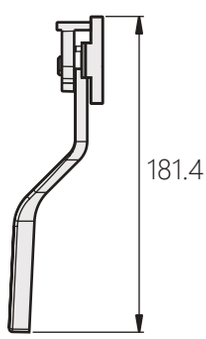

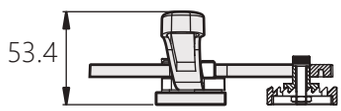

安裝示意圖

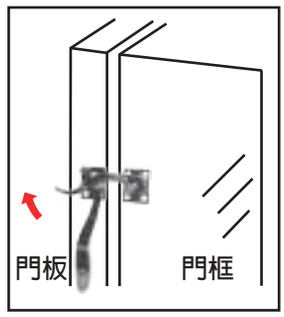

Hinge-OH
合頁

Hinge-OH
合頁

Hinge-OH
合頁

Hinge-OH
合頁

Hinge-OH
合頁

長排合頁

Removal Spring Loaded Hinge

OH-727



商品介紹:

- 不同的長度、寬度和厚度供選擇
- 本體轉動順暢，有孔和無孔兩種安裝方式
- 材質:鋼鐵、不鏽鋼304
- 表面處理:振動研磨、鍍鋅
- 無孔形式的為焊接安裝，也可定制有孔安裝型，可定制鋁合金材質產品

Product description:

- Different lengths, widths and thicknesses to choose from
- The body rotates smoothly, and there are two installation methods: empty and non-porous.
- Material: Steel ; Stainless Steel 304
- Surface treatment: Vibration grinding, galvanizing
- Non-porous form for welding installation, also can be customized with hole mounting type, customizable aluminum alloy products.

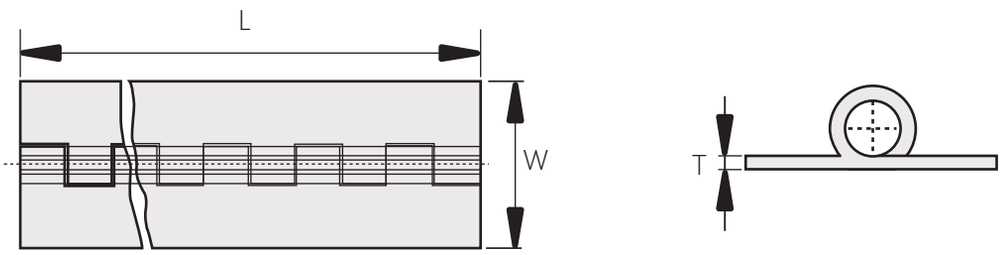

商品型號	L	W	T	商品型號	L	W	T
OH-727-10002610A/S	1000	26	1	OH-727-18005012A/S	1800	50	1.2
OH-727-12002610A/S	1200	26	1	OH-727-10003815A/S	1000	38	1.5
OH-727-10003212A/S	1000	32	1.2	OH-727-12003815A/S	1200	38	1.5
OH-727-12003212A/S	1200	32	1.2	OH-727-18003815A/S	1800	38	1.5
OH-727-18003212A/S	1800	32	1.2	OH-727-10005015A/S	1000	50	1.5
OH-727-10003812A/S	1000	38	1.2	OH-727-12005015A/S	1200	50	1.5
OH-727-12003812A/S	1200	38	1.2	OH-727-18005015A/S	1800	50	1.5
OH-727-18003812A/S	1800	38	1.2	OH-727-10005020A/S	1000	50	2
OH-727-10005012A/S	1000	50	1.2	OH-727-12005020A/S	1200	50	2
OH-727-12005012A/S	1200	50	1.2	OH-727-18005020A/S	1800	50	2

長排鉸鏈

Long row hinge

OH-1238



商品介紹:
- 材質:不鏽鋼304、鋼材
- 最長可達1.829公尺
- 厚度可達2mm

Product description:
- Material: Stainless steel 304, Steel
- Up to 1.829 meters
- Up to 2mm

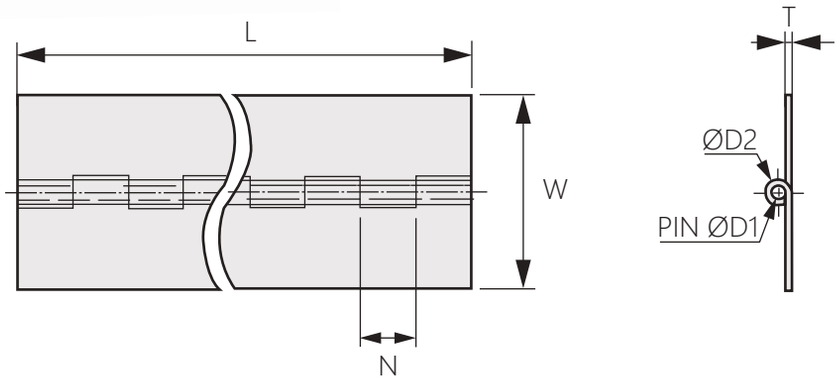

商品型號		L	W	T	D1	D2	N
不鏽鋼	鋼材						
OH-1238-1-1	OH-1238-2-1	1000	26	1	2.5	4.6	10
OH-1238-1-2	OH-1238-2-2	1200					
OH-1238-1-3	OH-1238-2-3	1000	32	1.2	3	5.6	12.5
OH-1238-1-4	OH-1238-2-4	1200					
OH-1238-1-5	OH-1238-2-5	1500					
OH-1238-1-6	OH-1238-2-6	1800					
OH-1238-1-7	OH-1238-2-7	1000	38				
OH-1238-1-8	OH-1238-2-8	1200					
OH-1238-1-9	OH-1238-2-9	1500					
OH-1238-1-10	OH-1238-2-10	1800					
OH-1238-1-11	OH-1238-2-11	1000	50				
OH-1238-1-12	OH-1238-2-12	1200					
OH-1238-1-13	OH-1238-2-13	1500					
OH-1238-1-14	OH-1238-2-14	1800					
OH-1238-1-15	OH-1238-2-15	1000	38	1.5	3.5	6.7	
OH-1238-1-16	OH-1238-2-16	1200					
OH-1238-1-17	OH-1238-2-17	1500					
OH-1238-1-18	OH-1238-2-18	1800					
OH-1238-1-19	OH-1238-2-19	1000	50				
OH-1238-1-20	OH-1238-2-20	1200					
OH-1238-1-21	OH-1238-2-21	1500					
OH-1238-1-22	OH-1238-2-22	1800					
OH-1238-1-23	OH-1238-2-23	1016	51	2	3.8	8.1	25.4
OH-1238-1-24	OH-1238-2-24	1219					
OH-1238-1-25	OH-1238-2-25	1524					
OH-1238-1-26	OH-1238-2-26	1829					
	OH-1238-2-27	1067	76	3	6	12.4	38.1
	OH-1238-2-28	1219					
	OH-1238-2-29	1524					
	OH-1238-2-30	1829					

不鏽鋼拆卸鉸鏈 OH-034-1

Stainless steel removal hinge



商品介紹:

- 全不鏽鋼材質拆卸鉸鏈，可焊接安裝
- 材質:不鏽鋼（SUS304）
- 表面處理:震動研磨
- 用途:電箱、電櫃、小型機櫃

Product description:

- Disassembly hinge made of stainless steel for welding installation
- Material: Stainless steel (SUS304)
- Surface treatment: Vibration grinding
- Uses: Electric box, electric cabinet, small cabinet

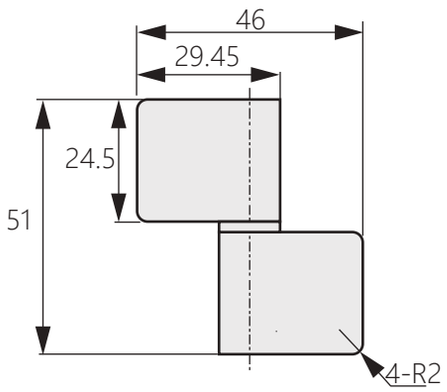

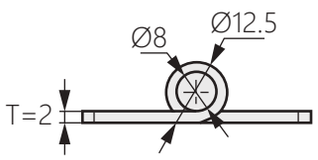

不鏽鋼拆卸鉸鏈 OH-034-2

Stainless steel removal hinge



商品介紹:

- 全不鏽鋼材質拆卸鉸鏈，可焊接安裝
- 材質:不鏽鋼(SUS304)
- 表面處理:震動研磨
- 用途:電箱、電櫃、小型機櫃

Product description:

- Disassembly hinge made of stainless steel for welding installation.
- Material: Stainless steel (SUS304)
- Surface treatment: Vibration grinding
- Uses: Electric box, electric cabinet, small cabinet.

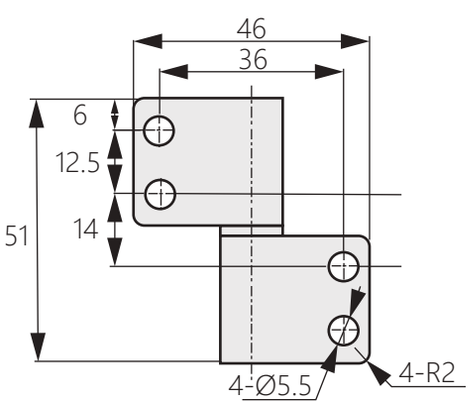

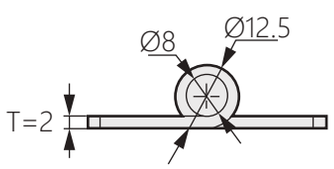

雙葉丁雙

Removal Lift Off Hinge

OH-306



商品介紹:

- 門可快速且輕鬆地卸下
- 安裝簡單易明，節省成本
- 材質:鋼鐵、不鏽鋼304
- 用途:電子設備外殼、工業機箱、工業設備、展品/ 標誌

Product description:

- Quick, easy door removal
- Cost effective with simple, intuitive installation
- Material: Steel ; Stainless Steel 304
- Uses: Electronics Enclosures, Industrial Equipment, Industrial Machinery, Exhibits/Signs.

[OH-306-1
OH-306-2]

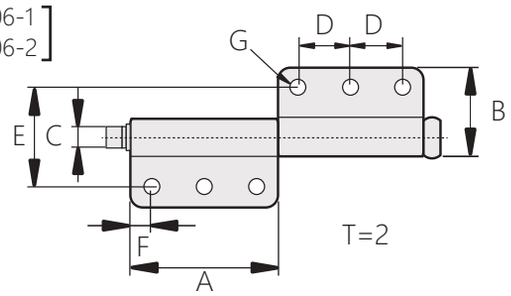

[OH-306-3
OH-306-4]

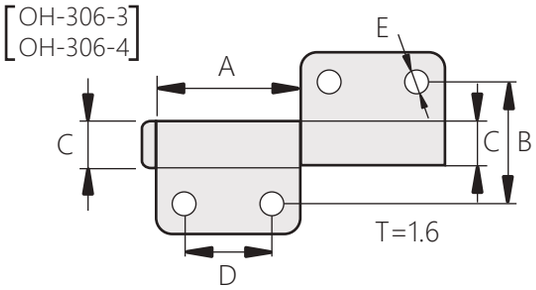

商品型號	材質	結構	A	B	C	D	E	F	G
OH-306-1	不鏽鋼或鐵	無孔	50	32	Ø7				
OH-306-2	不鏽鋼或鐵	有孔	50	32	Ø7	18	33	7	6-Ø5.5
OH-306-3	不鏽鋼或鐵	無孔	30		9.5				
OH-306-4	不鏽鋼或鐵	有孔	30	25	9.5	18	Ø5		

不鏽鋼蝶型合頁

Stainless steel butterfly hinge

OH-2057



商品介紹:

- 沖壓鉸鏈結構，簡單集成和安裝簡便，無需額外成本
- 材質:不鏽鋼
- 表面處理:震動研磨
- 用途:電子設備外殼、工業機箱、工業設備、船舶

Product description:

- Stamped hinge construction easy integration and simple installation without added cost.
- Material: Stainless Steel 304
- Surface treatment: Vibration Polish Finish
- Electronics Enclosures, Industrial Equipment,Industrial Machinery, Ship.

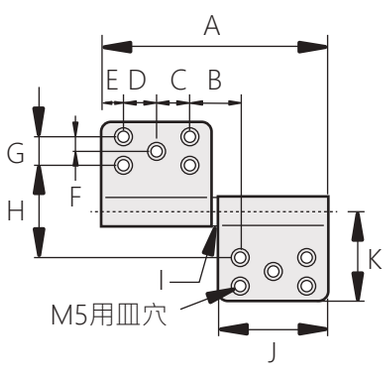

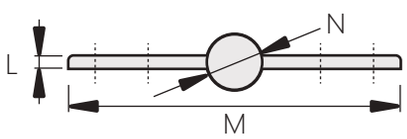

商品型號	A	B	C	D	E	F	G	H	I	J	K	L	M	N
OH-2057-1-L/R	128	29	18.5	18.5		8	16	52	4	62	50	4	100	Ø16
OH-2057-2-L/R	135.5	29	18.5	18.5	12.5	8	16	51	3.5	63	51	3	102	Ø18.5

鋅合金鉸鏈(螺柱型)

Zinc alloy hinge (stud type)

OH-226-4-1



商品介紹:

- 徑向載荷:1100N
- 軸向載荷:1200N
- 材質:鋅合金
- 表面處理:黑色塗裝

Product description:

- Radial load: 1100N
- Axial load: 1200N
- Material: Zinc alloy
- Surface treatment: Black paint

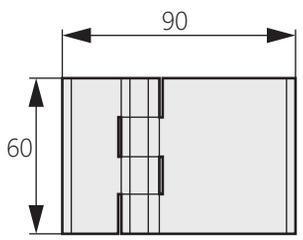

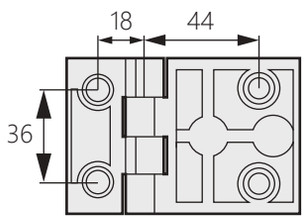

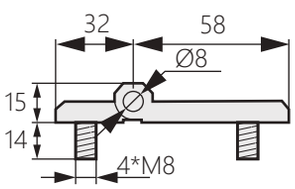

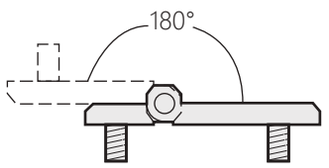

門窗合頁

Door and window hinge

OH-226-4-2



商品介紹:

- 材質:不鏽鋼304板沖壓製造
- 表面處理:髮絲紋拋光
- 用途:工業工程、機械五金

Product description:

- Material: Stainless steel 304 plate stamping
- Surface treatment: Hairline polishing
- Uses: Industrial engineering, mechanical hardware

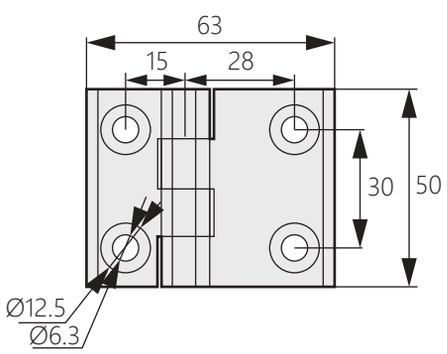

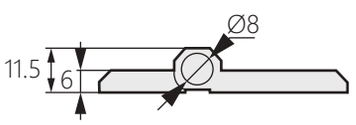

蝶型鉸鏈

Butt Hing

OH-226-5



商品介紹:

- 鉸鏈背面配有鑲嵌螺柱，可防止破壞和更好的美觀結構穩固，適用於室內和戶外應用簡單集成和安裝簡便，無需額外成本
- 材質:鋅合金
- 類型:螺柱型
- 表面處理:黑色塗裝
- 用途:電子設備外殼、工業機箱、工業設備、展品、標誌、自動售貨機

Product description:

- Thread-stud styles feature concealed hardware for vandal resistance and better aesthetics. Solid structure, suitable for indoor and outdoor applications. Simple integration and easy installation at no additional cost.
- Material: Zinc Alloy
- Type: Stud type
- Surface treatment: Black Powder Coated
- Uses: Electronics enclosures, industrial equipment, industrial machinery, exhibits、signs vending machines.

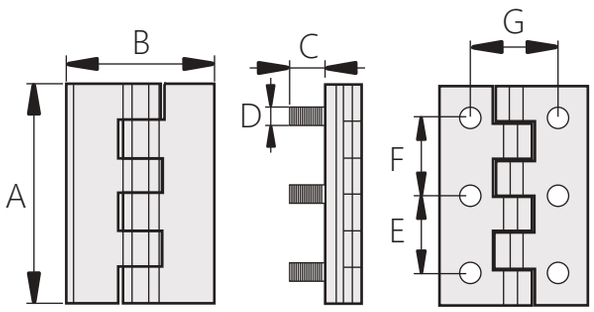

商品型號	A	B	C	D	E	F	G
OH-226-5	90	61	14.5	6-M8	32	32	36

蝶型鉸鏈

Butt Hing

OH-226-6



商品介紹:

- 鉸鏈背面配有鑲嵌螺柱，可防止破壞和更好的美觀結構穩固，適用於室內和戶外應用簡單集成和安裝簡便，無需額外成本
- 材質:鋅合金
- 類型:螺柱型
- 表面處理:黑色塗裝
- 用途:電子設備外殼、工業機箱、工業設備、展品/ 標誌、自動售貨機

Product description:

- Thread-stud styles feature concealed hardware for vandal resistance and better aesthetics. Solid structure, suitable for indoor and outdoor applications. Simple integration and easy installation at no additional cost.
- Material: Zinc Alloy
- Type: Stud type
- Surface treatment: Black Powder Coated
- Uses: Electronics enclosures, industrial equipment, industrial machinery, exhibits、signs vending machines.

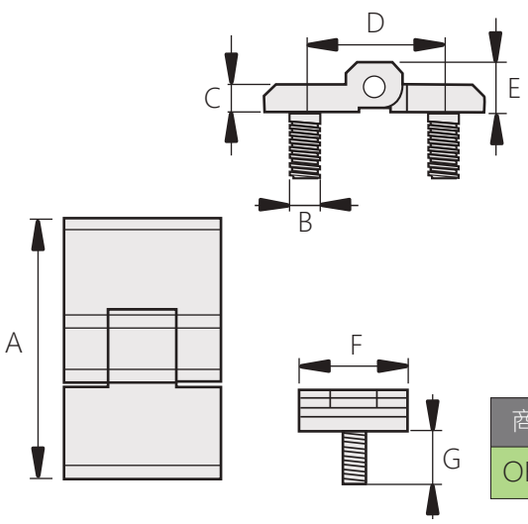

商品型號	A	B	C	D	E	F	G
OH-226-6	39.8	2*M5	5	25	9	24	12

恆定扭力型定位鉸鏈

Constant Torque Position Control Hinge

OH-209



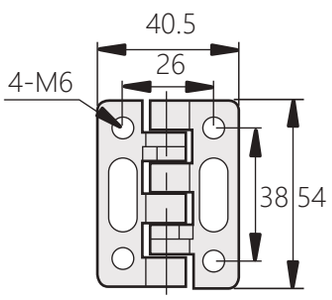

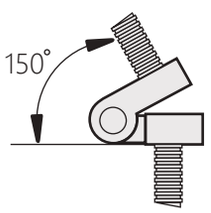

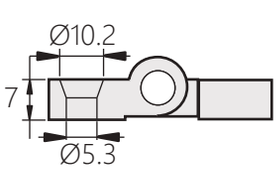

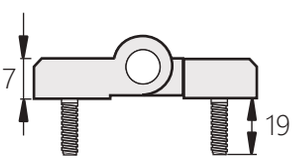

商品介紹:

- 恆定扭力型定位鉸鏈可在整個轉動範圍內提供恆定的扭力，使用戶能夠輕鬆固定門板、螢幕、或其他組件，並使其穩妥地保持在任何需要的角度，無須另外加裝支撐組件
- 材質:主體- 鋅合金、插銷- 不鏽鋼
- 表面處理:黑色塗裝
- 用途:電子設備外殼、工業機箱、工業設備、展品/ 標誌

Product description:

- User-Constant Torque Position Control Hinges provide constant resistance throughout the entire range of motion, enabling users to easily position doors,display screens and other mounted components and hold them securely at any desired angle.
  Eliminates the need for secondary supports to hold hinged components in position.
- Material: Main Body-Zinc Alloy ; Pin-Stainless
- Surface treatment: Black Powder Coated
- Uses: Electronics enclosures, industrial equipment, industrial machinery, exhibits、signs vending machines.

商品型號	類別	扭力數值
OH-209-1	螺柱型	47Kg.cm ± 15%
OH-209-2	沉孔型	
OH-209-3	螺柱型	12Kg.cm ± 15%
OH-209-4	沉孔型	

外露式合頁

Exposed Hinge

OH-030



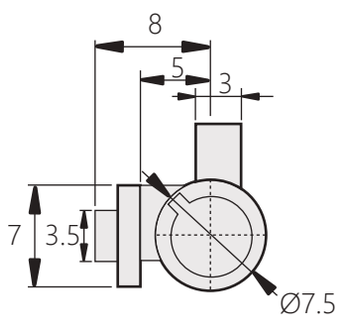

商品介紹:

- 微型鉸鍊，帶有一定阻尼功能
- 左右開門兼用
- 安裝時螺絲從板內安裝
- 材質:鋅合金
- 表面處理:銀色烤漆
- 用途:電箱、電櫃、小型機櫃等

Product description:

- Miniature hinge with a certain damping function
- Open the door left and right
- Screws are installed from the board during installation
- Material: Zinc alloy
- Surface treatment: Silver paint
- Uses: Electric boxes, electric cabinets, small cabinets, etc.

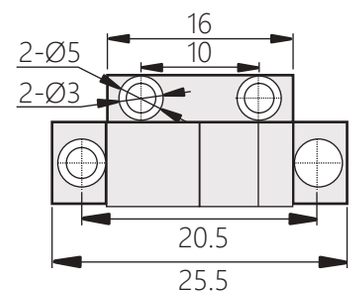

外露式合頁

Exposed hinge

OH-011



商品介紹:

- 鉸鏈背面配有鑲嵌螺柱，可防止破壞和更好的美觀
- 材質:鋅合金
- 表面處理:黑色塗裝、鍍亮鉻

Product description:

- Inlaid studs on the back of the hinge to prevent damage and better aesthetics.
- Material: Zinc alloy
- Surface treatment: Black coating, chrome plating.

OH-011-1
OH-011-2
OH-011-3
OH-011-4

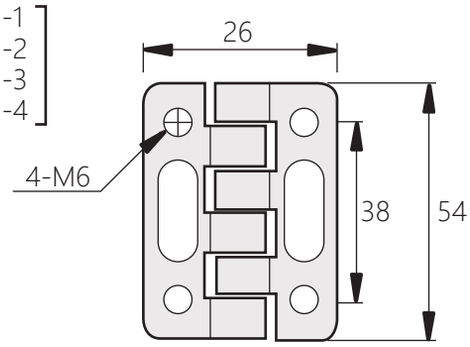

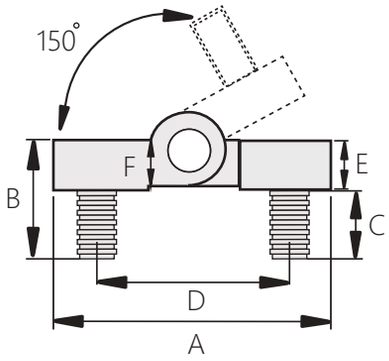

商品型號	表面處理	A	B	C	D	E	F
OH-011-1	鍍亮鉻	40	19.2	11.5	26		
OH-011-2	黑色塗裝						
OH-011-3	鍍亮鉻	40.5	21	14	26	7	5.8
OH-011-4	黑色塗裝						

安裝示意圖

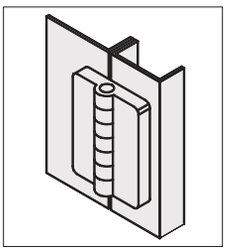

外露式合頁

Exposed Hinge

OH-2126

商品介紹:

- 材質:不鏽鋼
- 表面處理:鏡光
- 用途:交通車輛、工業設備及工業櫃

Product description:

- Material: Stainless steel
- Surface treatment: Mirror Poloshing
- Uses: Transportation vehicles, industrial equipment and industrial cabinets.



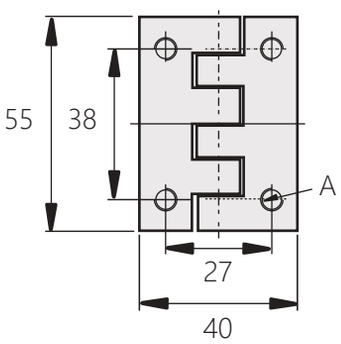

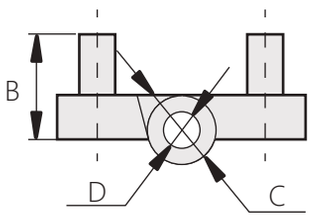

商品型號	A	B	C	D
OH-2126	4-M6	20	Ø11	Ø6

平型鉸鏈

Butt Hinge

OH-1078



商品介紹:

- 左右兼用型
- 材質:不鏽鋼(SUS304)、鐵
- 表面處理:鏡面拋光
- 用途:機床、自動化設備、工業箱機等

Product description:

- Left and right
- Material: Stainless steel (SUS304)、Iron
- Surface treatment: Mirror polishing
- Uses: Machine tools, automation equipment, industrial box machines, etc.

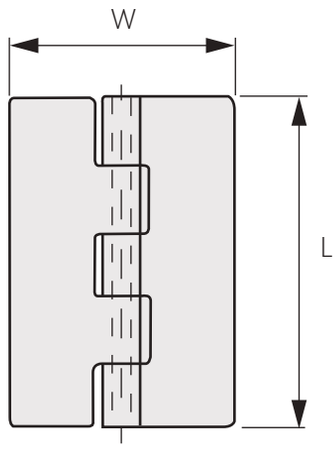

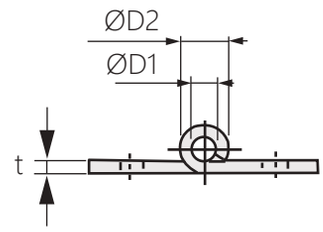

商品型號		L	W	t	ØD1	ØD2	荷重 (KG)
不鏽鋼	鐵						
OH-1078-1-1	OH-1078-2-1	40	35	1.5	3	6.3	6
OH-1078-1-2	OH-1078-2-2	50	35	1.5	3	6.3	8
OH-1078-1-3	OH-1078-2-3	65	50	2	4.5	8.8	13
OH-1078-1-4	OH-1078-2-4	75	50	2	4.5	8.8	15
OH-1078-1-5	OH-1078-2-5	90	60	3	6	12.3	25
OH-1078-1-6	OH-1078-2-6	100	60	3	6	12.3	30

不鏽鋼蝶型鉸鏈

SStainless steel butterfly hinge

OH-1075



商品介紹:

- 材質:不鏽鋼304
- 表面處理:震動研磨

Product description:

- Material: 304 stainless steel
- Surface treatment: Vibration grinding

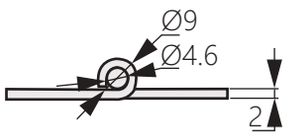

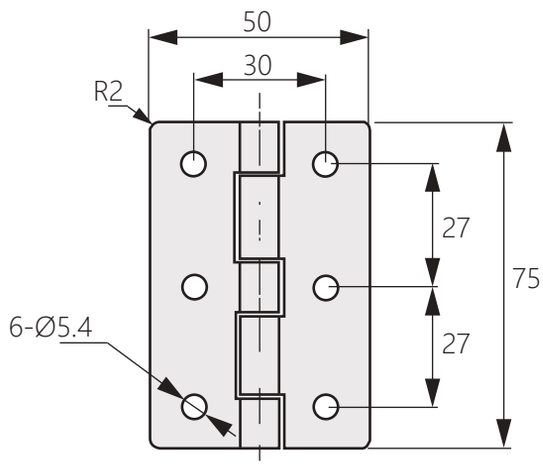

商品型號	樣式
OH-1075-1	有孔
OH-1075-2	無孔

蝶型鉸鏈

OH-1369

Butt Hinge



商品介紹:

- 材質:不鏽鋼 316板沖壓製造
- 表面處理:震盪研磨
- 用途:半導體工程、工業工程五金用

Product description:

- Material: Stainless steel 316 plate stamping
- Surface treatment: Shock grinding
- Uses: Semiconductor engineering, industrial engineering hardware.

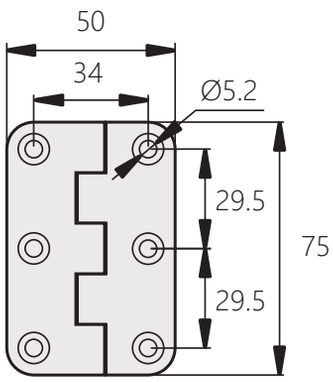



外露式方圓型鉸鏈

OH-046

Exposed Square Hinge



商品介紹:

- 外觀美觀，操作簡單
- 材質:鐵(SPCC)
- 表面處理:拉絲鎳
- 用途:機箱機櫃、自動化設備、機械設備

Product description:

- Beautiful appearance and easy operation
- Material: Iron (SPCC)
- Surface treatment: Brushed nickel
- Uses: Chassis cabinets, automation equipment, mechanical equipment.

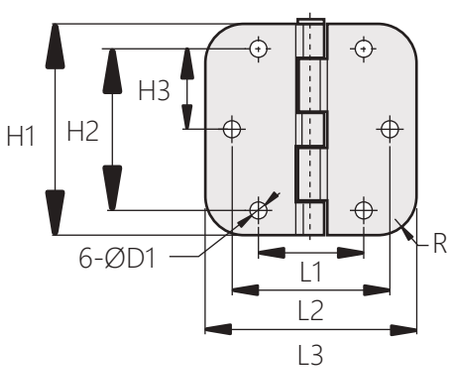

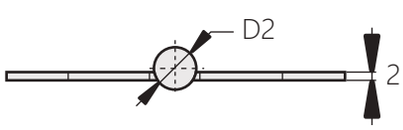

商品型號	L1	L2	L3	H1	H2	H3	D1	D2
OH-046-1	53	71	88.5	88.5	71	35.5	7.2	11
OH-046-2	47	60	76	76	60	30	7.2	11

不鏽鋼蝶型合頁

Stainless Stell Butt Hinge

OH-5065



[OH-5065-1
OH-5065-4
OH-5065-6]



[OH-5065-2
OH-5065-3
OH-5065-5]



[OH-5065-8
OH-5065-9
OH-5065-10]



[OH-5065-7]

商品介紹:

- 沖壓鉸鏈結構
- 簡單集成和安裝簡便，無需額外成本
- 材質:不鏽鋼(SUS304)
- 表面處理:震動研磨
- 用途:電子設備外殼、工業機箱、工業設備、船舶

Product description:

- Stamping hinge structure
- Simple integration and easy installation without additional cost
- Material: Stainless steel (SUS304)
- Surface treatment: Vibration grinding
- Uses: Electronic equipment casing, industrial chassis, industrial equipment, ships.

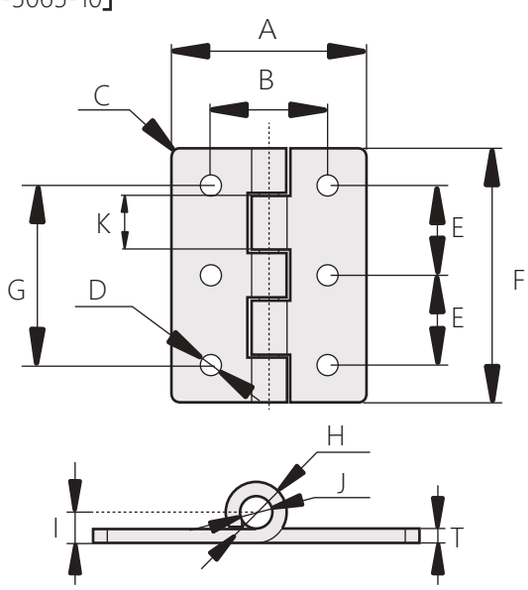

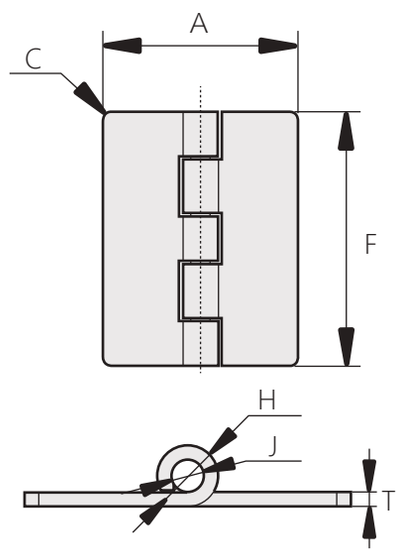

商品型號	結構	A	B	C	D	E	F	G	H	I	J	T	K
OH-5065-1	有孔	60	38		6-Ø6.4	35	90	70		6		3	
OH-5065-2	有孔	50	30	R2	6-Ø5.4	27	75	54	Ø9		Ø5	2	
OH-5065-3	無孔												
OH-5065-4	有孔	50	30		6-Ø5.3	27		54		4.3			
OH-5065-5	有孔			R2		23	65		Ø9		Ø5		
OH-5065-6	有孔				6-Ø4.3			46		4.3			
OH-5065-7	有孔	35	22		4-Ø4.3		50	34	Ø6.3	3	Ø3	1.5	5
OH-5065-8	有孔											2	
OH-5065-9	有孔				6-Ø3.3		40	26		3		1.5	
OH-5065-10	有孔	22	12.5				30	18		2.2		1.2	

製藥機械合頁

OH-043

Large Hinge



商品介紹:

- 左右對稱式設計，左右皆可安裝
- 表面處理:拉絲拋光
- 材質:不鏽鋼(SUS304)
- 用途:機箱機櫃、廚房設備、自動化設備

Product description:

- Left and right symmetrical design, both sides can be installed.
- Surface treatment: Brushed polishing
- Material: Stainless steel (SUS304)
- Uses: Large door leaf in container, industrial engineering hardware.

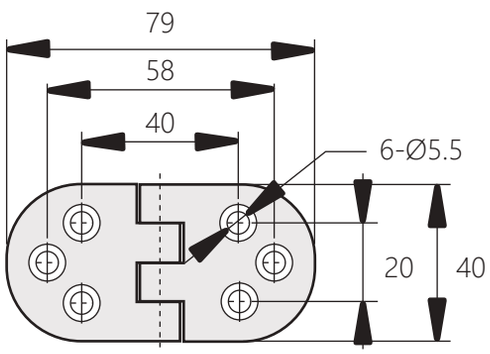

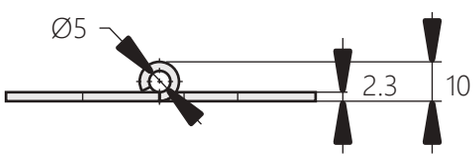

蝶型鉸鏈

OH-2060

Butt Hinge



商品介紹:

- 材質:不鏽鋼304板沖壓製造
- 表面處理:鏡面拋光
- 用途:工業工程、機械五金

Product description:

- Material: Stainless steel plate stamping
- Surface treatment: Mirror polishing
- Uses: Industrial engineering, mechanical hardware

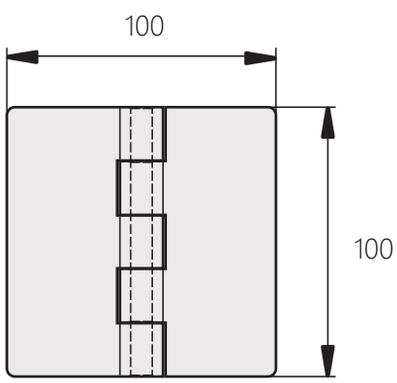

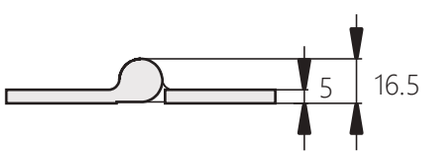

不鏽鋼蝶型合頁

OH-2017

Stainless steel butterfly hinge



商品介紹:

- 沖壓鉸鏈結構，簡單集成和安裝簡便，無需額外成本
- 材質:不鏽鋼
- 表面處理:震動研磨
- 用途:電子設備外殼、工業機箱、工業設備、船舶

Product description:

- Stamped hinge constructionEasy integration and simple installation without added cost.
- Material: Stainless Steel 304
- Surface treatment: Vibration Polish Finish
- Uses: Electronics Enclosures, Industrial Equipment, Industrial Machinery, Ship.

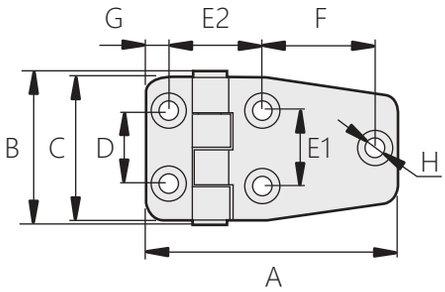

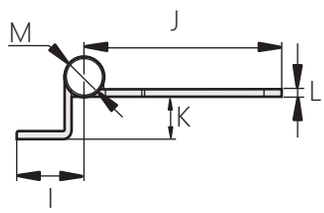

商品型號	A	B	C	D	E1	E2	F	G	H	I	J	K	L	M
OH-2017	67	40.6	38	19.1	20.3	24.7	30	6	5-Ø5.3	17	50	10.5	2	Ø10

不鏽鋼蝶型合頁

OH-2019

Stainless steel butterfly hinge

商品介紹:

- 沖壓鉸鏈結構，簡單集成和安裝簡便，無需額外成本
- 材質:不鏽鋼
- 表面處理:震動研磨
- 用途:電子設備外殼、工業機箱、工業設備、船舶

Product description:

- Stamped hinge constructionEasy integration and simple installation without added cost.
- Material: Stainless Steel 304
- Surface treatment: Vibration Polish Finish
- Uses: Electronics Enclosures, Industrial Equipment, Industrial Machinery, Ship.



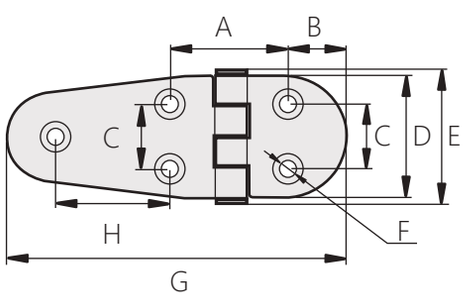

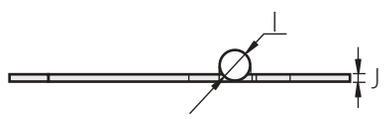

商品型號	A	B	C	D	E	F	G	H	I	J
OH-2019	36.8	18.4	20	38	40.6	5-Ø5.3	106	35.6	Ø10	2

不鏽鋼小型合頁

OH-8059

Stainless Steel hinge-Mini Type



商品介紹:

- 沖壓鉸鏈結構
  簡單集成和安裝簡便，無需額外成本
- 材質:不鏽鋼
- 表面處理:震動研磨
- 用途:電子設備外殼、工業機箱、工業設備、船舶

Product description:

- The stamped hinge structure is simple to integrate and easy to install, no additional cost.
- Material: Stainless steel
- Surface treatment: Vibration polish finish
- Uses: Electronics enclosures, industrial equipment, industrial machinery, ship.

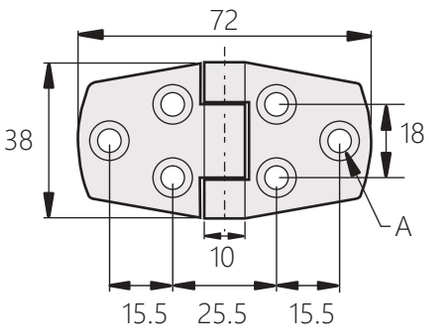

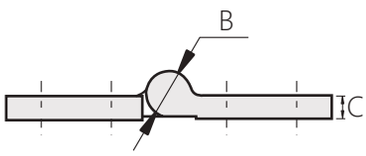

商品型號	A	B	C
OH-8059	M5用皿穴	10	5

不鏽鋼蝶型合頁

OH-2018

Stainless Steel Butt Hinge



商品介紹:

- 沖壓鉸鏈結構，簡單集成和安裝
  簡便，無需額外成本
- 材質:不鏽鋼
- 表面處理:震動研磨
- 用途:電子設備外殼、工業機箱、工業設備、船舶

Product description:

- Stamped hinge constructionEasy integration and simple installation without added cost.
- Material: Stainless Steel 304
- Surface treatment: Vibration Polish Finish
- Uses: Electronics enclosures, industrial equipment, industrial machinery, ship.

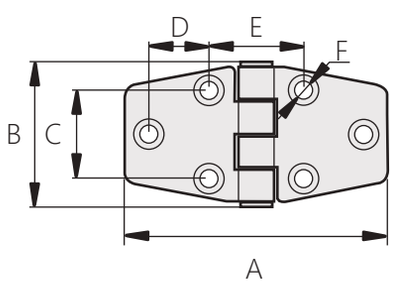

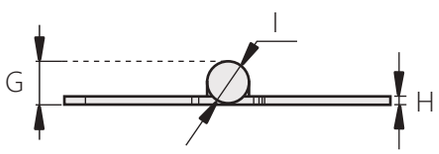

商品型號	A	B	C	D	E	F	G	H	I
OH-2018	74	40	24.8	16.9	26.6	6-Ø5.3	10	2	Ø10

不鏽鋼小型合頁

Stainless Steel hinge-Mini Type

OH-2063



商品介紹:

- 材質:不鏽鋼脫蠟鑄造
- 表面處理:鏡面拋光
- 用途:機械五金、工業設備、船舶

Product description:

- Material: Stainless steel dewaxing casting
- Surface treatment: Mirror polishing
- Uses: Mechanical hardware、industrial equipment、 ships.

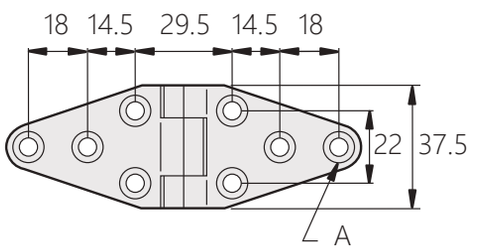

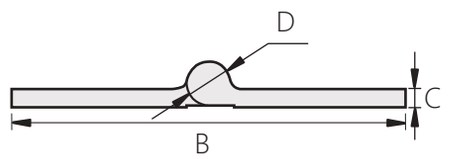

商品型號	A	B	C	D
OH-2063	M5用皿穴	108	5	Ø12

不鏽鋼小型合頁

Plastic Lift off Hinge

OH-2058



商品介紹:

- 材質:不鏽鋼脫蠟鑄造
- 表面處理:鏡面拋光
- 用途:機械五金、工業設備、船舶

Product description:

- Material: Stainless steel dewaxing casting
- Surface treatment: Mirror polishing
- Uses: Mechanical hardware、industrial equipment、 ships.

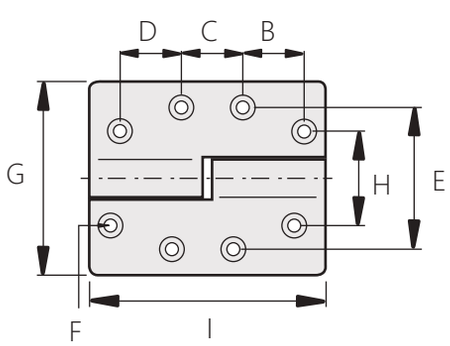

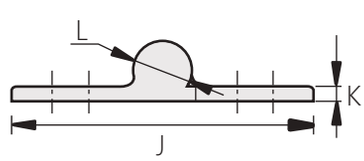

商品型號	B	C	D	E	F	G	H	I	L	J	K
OH-2058-1L	26	26	26	60	M5用皿穴	82	40	100	Ø16	82	4
OH-2058-1R	26	26	26	60	M5用皿穴	82	40	100	Ø16	82	4

可微調式鋅合金合頁

Removal Spring Loaded Hinge

OH-282

ZDC 鋅 CAD



OH-282-1-R



OH-282-2-L

商品介紹:

- 重乘載型
- 調整轉軸，可以微調鉸鏈上下左右前後尺寸 (如示意圖)
- 材質:本體-鋅合金 , 軸-不鏽鋼
- 表面處理:黑色塗裝
- 用途:機櫃、配分電盤、機械設備

Product description:

- Heavy load type
- Adjust the hinge to fine-tune the hinge's top, bottom, left and right dimensions (as shown).
- Material: Body - Zinc Alloy, Shaft - Stainless Steel
- Surface treatment: Black coating
- Uses: Cabinets, distribution boards, mechanical equipment.

[OH-282-1-L
OH-282-1-R]

安裝示意圖

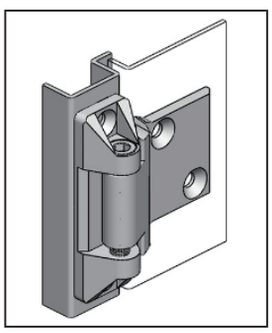

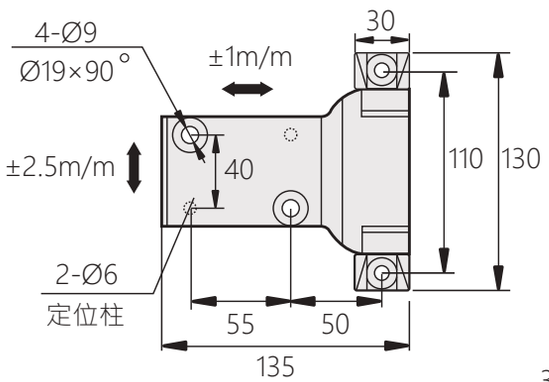

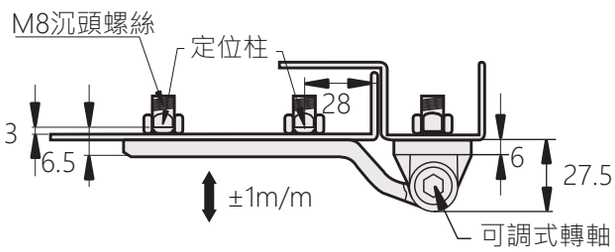

[OH-282-2-L
OH-282-2-R]

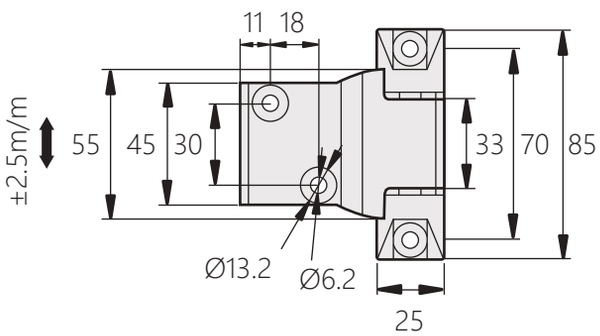

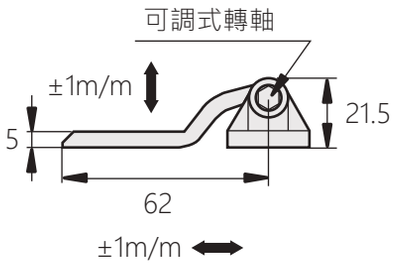

外露式鉸鏈

Exposed hinge

OH-219



商品介紹:

- 左右兼用型
- 大小邊設計，門板可轉動180度
- 材質:鐵
- 表面處理:黑色烤漆
- 用途:機床、自動化設備、工業箱機等

Product description:

- Suitable for left and right hinging
- Large and small side opening design, door panel can be rotated to 180 degrees
- Material: SPCC
- Surface treatment: Black paint
- Uses: Machine tool, automation equipment, industrial cabinet.

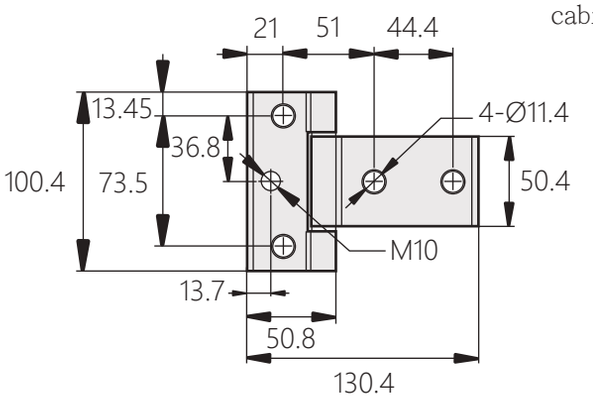

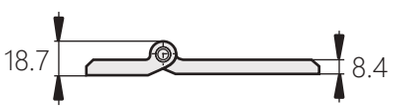

T型外露式鉸鏈

T-type exposed hinge

OH-300

商品介紹:

- 左右兼用型
- 最大開啟角度180度
- 大小邊T型設計，符合門板與門框的性能要求
- 材質:不鏽鋼304
- 表面處理:鏡面拋光
- 用途:工業箱體、自動化設備、機箱機櫃

Product description:

- Suitable for left and right hinging
- Low profile with 180 degree opening angle
- Large and small T type design, suitable for the requirements of door panel and door frame
- Material: Stainless steel 304
- Surface treatment: Mirror finish
- Uses: Industrial cabinet, automation equipment, chassis cabinet.



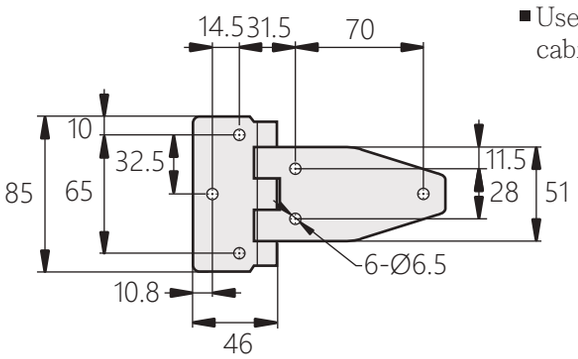

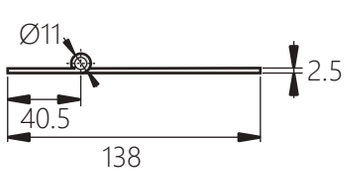

阻尼合頁

Damping hinge

OH-197



商品介紹:

- 將門可以保持在任意角度
- 拉櫃無須調整，使壽命延長
- 材質:鋅合金
- 表面處理:黑色烤漆、鍍亮鉻
- 用途:工業烤箱、重型設備門、環節設施等

Product description:

- Keep the door at any angle
- Pull cabinet does not need to be adjusted to extend life.
- Material: Zinc alloy
- Surface treatment: Black paint, bright chrome
- Uses: Industrial ovens, heavy equipment doors, link facilities, etc.

【OH-197-1】

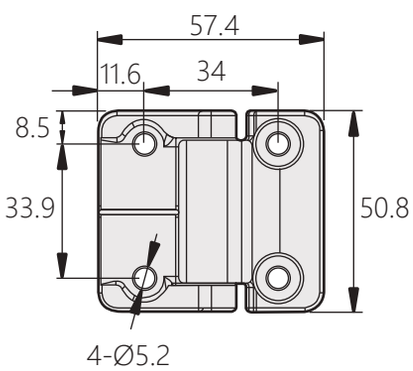

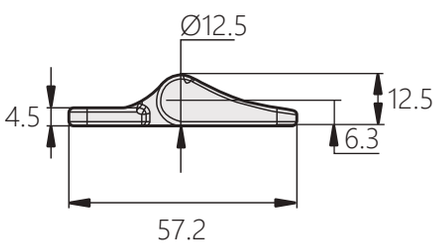

【OH-197-2
OH-197-3】

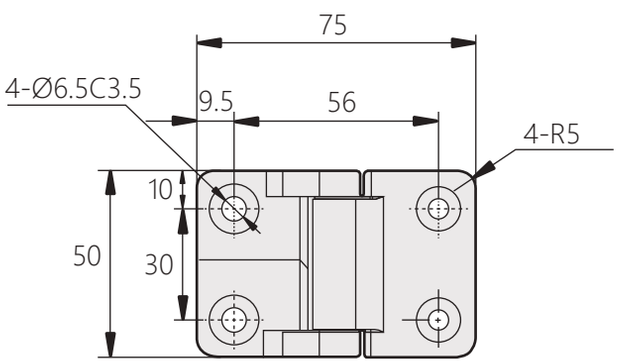

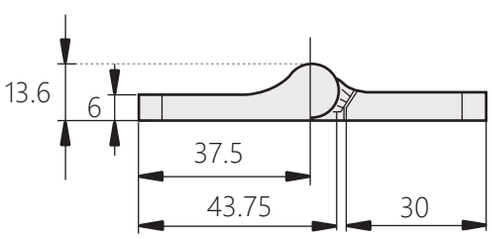

商品型號	表面處理
OH-197-1	黑色噴粉
OH-197-2	無光黑
OH-197-3	亮光鉻

限位合頁

Position Hinge

OH-004



商品介紹:

- 具有阻尼功能，可90度和180度進行限位
- 分不鏽鋼和鍍鎳鋼銷子
- 結構設計合理，可很好地定位置規定角度
- 材質:鋅合金
- 表面處理:鍍亮鉻
- 左右兼用型
- 用途:機箱機櫃、電箱、烤箱、電櫃

Product description:

- With damping function, can be limited by 90 degrees and 180 degrees.
- Stainless steel and nickel-plated steel pins
- Reasonable structure design, good positioning angle.
- Material: Zinc alloy
- Left and right
- Uses: Chassis cabinet, electric box, oven, electric cabinet.

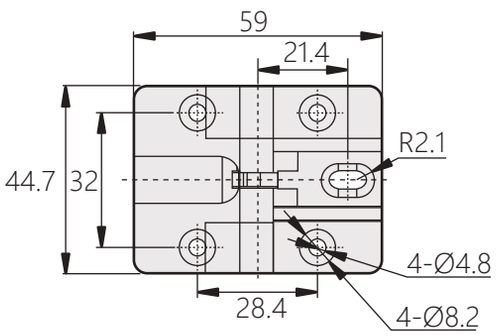

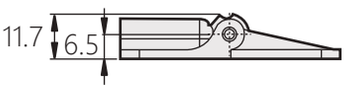

商品型號	銷子材質
OH-004-1	不鏽鋼
OH-004-2	鍍鎳鋼

門窗合頁

Door and window hinge

OH-1371



商品介紹:

- 材質:不鏽鋼304板沖壓製造
- 表面處理:髮絲紋拋光
- 用途:工業工程、機械五金

Product description:

- Material: Stainless steel 304 plate stamping
- Surface treatment: Hairline polishing
- Uses: Industrial engineering, mechanical hardware

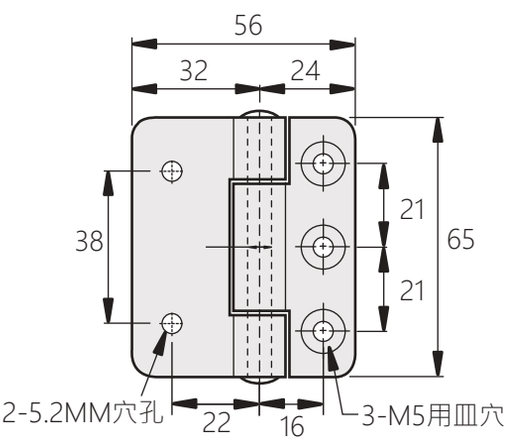

[OH-1371-1]

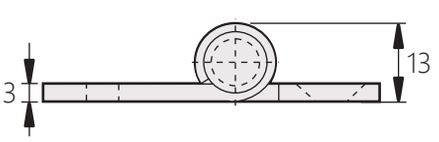

[OH-1371-2]

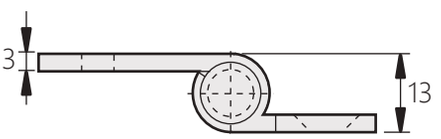

阻尼式合頁

Adjustable Torque Postition ControlHinge

OH-272

CAD



商品介紹:

- 用戶調節操作力
- 隱藏式安裝能力
- 以螺絲起子調整阻尼力，可使門板於開啟時固定於任意角度
- 防腐材料
- 材質:主體 - 塑鋼、轉軸 - 聚碳酸酯
- 用途:電子設備外殼、工業機箱、工業設備、展品/ 標誌

Product description:

- User-adjustable operating effort
- Ability to conceal mounting hardware
- Torque strength is adjusted by screwdriver can hold steady at any angle.
- Corrosion-resistant materials
- Material: Body - POM PIN - PC
- Uses: Electronics Enclosures, Industrial Equipment, Industrial Machinery, Exhibits/Signs.

[OH-272-1]

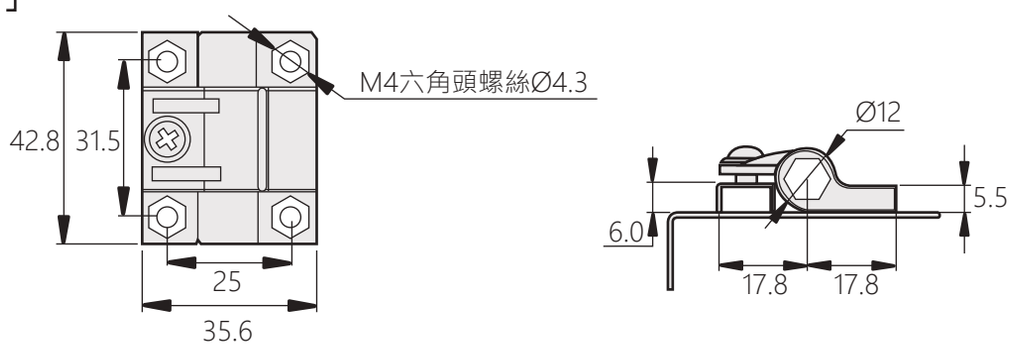

[OH-272-2]

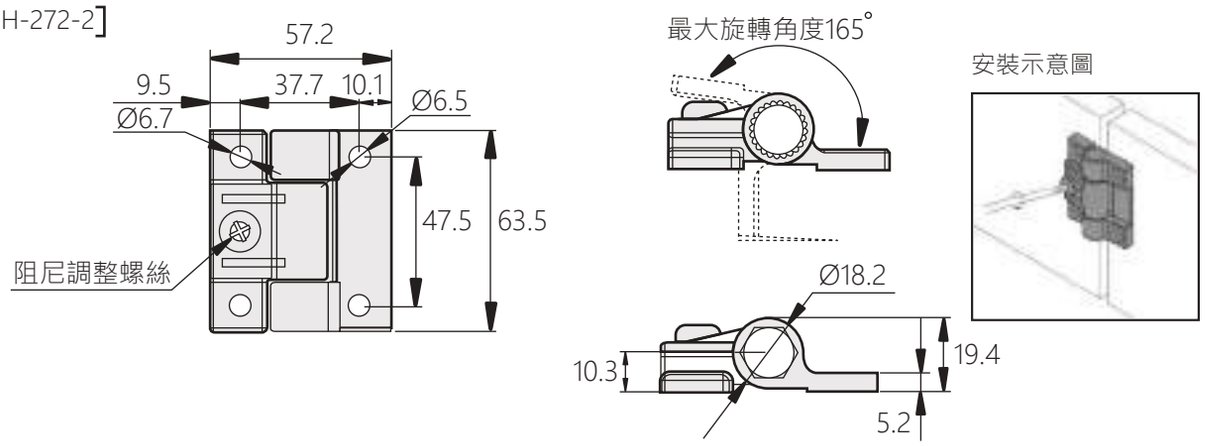

[OH-272-3]
[OH-272-4]

商品型號	顏色	規格
OH-272-1	黑色	六角孔
OH-272-2	黑色	圓形孔
OH-272-3	黑色	六角孔
OH-272-4	白色	六角孔

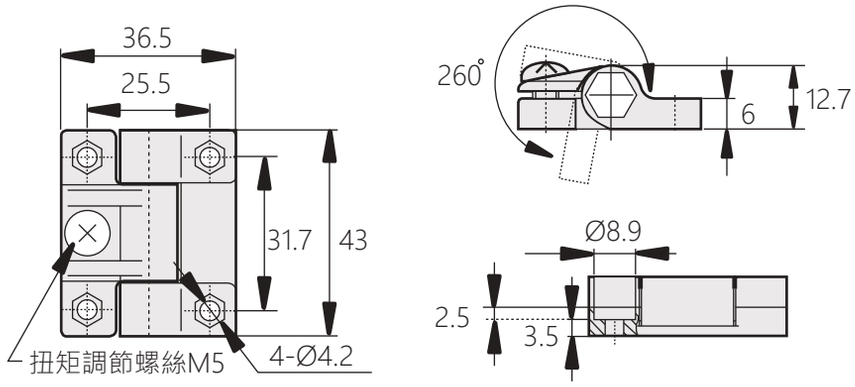

180度隱藏式合頁

180 Degree Concealed Hinge

OH-95



商品介紹:

- 完全隱藏式鉸鏈允許沉入式面板設計
  隱藏式安裝硬件，確保外觀簡約且富專業感。
  三種尺寸，適用於不同的應用需求。
- 材質:鋅合金
- 表面處理:鍍鉻
- 用途:電子設備外殼、工業機箱、工業設備、展品、標誌、醫療設備

Product description:

- Completely concealed hinges allow for flush exterior surface design, more security and better aesthetics.
  Concealed mounting hardware for clean, professional appearance.
  Three size to fit different applications.
- Material: Zinc Alloy
- Surface treatment: Electroplated With Chrome
- Uses: Electronics Enclosures, Industrial Equipment, Industrial Machinery, Exhibits/Signs, Medical equipment.

[OH-95-1
OH-95-2
OH-95-3]

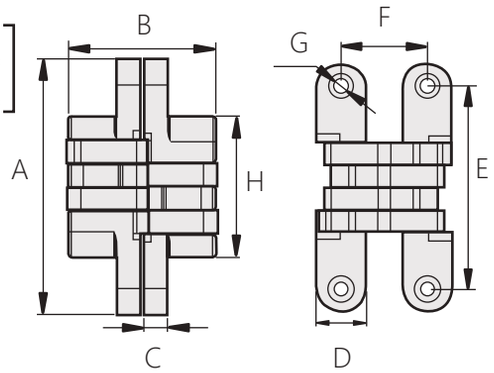

安裝示意圖

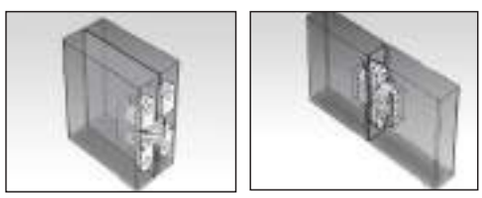

商品型號	A	B	C	D	E	F	G	H
OH-95-1	45	37	5	13	31	21.5	Ø4.3	18
OH-95-2	70	47.5	7	16	51.5	26.5	Ø4.4	34
OH-95-3	95	54.5	9	19	77.6	33	Ø5	52

磁鐵拍門器

Magnet gate

OH-275



商品介紹:

- 安裝簡單易明
- 材質:主體－尼龍玻璃、插銷－鐵鍍鎳

Product description:

- Easy to install
- Material: Ain body - nylon glass, pin - iron plated nickel.

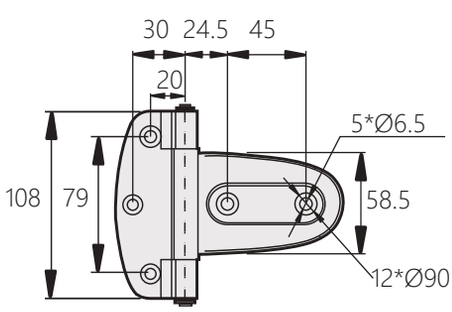

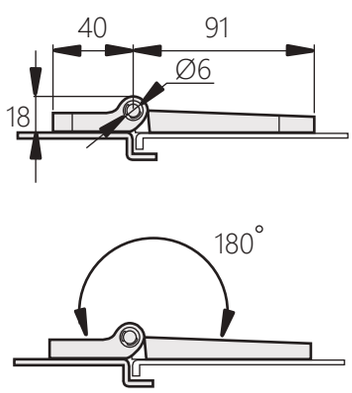

彈簧合頁

Spring Hinge

OH-236



商品介紹:

- 開啟門板後可自動回彈定位，
  預防工安產生可使門板保持關閉狀態。
- 材質:不鏽鋼或鋼板
- 表面處理:震動研磨
- 用途:電子設備外殼、工業機箱、工業設備

Product description:

- Open the door automatically rebound after positioning, prevention of work safety.
  Design to keep doors closed.
- Material: Stainless steel or steel
- Surface treatment: Vibration polish
- Uses: Electronics enclosures, industrial equipment, industrial machinery.

商品型號	材質
OH-236-1	不鏽鋼
OH-236-2	不鏽鋼
OH-236-3	不鏽鋼或鋼板
OH-236-4	不鏽鋼或鋼板
OH-236-5	不鏽鋼或鋼板
OH-236-6	不鏽鋼304

【OH-236-1】

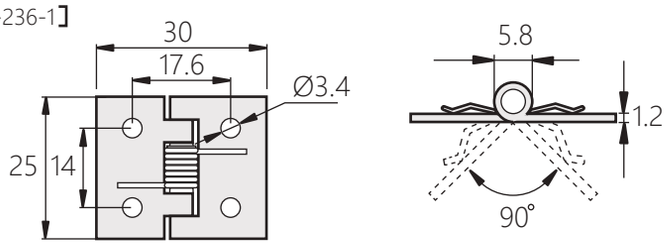

【OH-236-2】

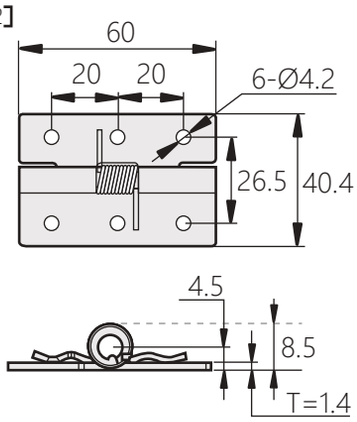

【OH-236-3】

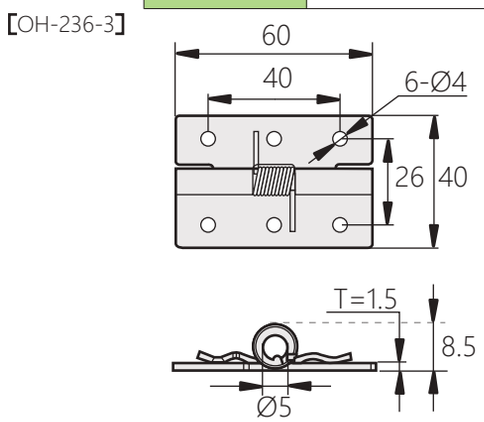

【OH-236-4】

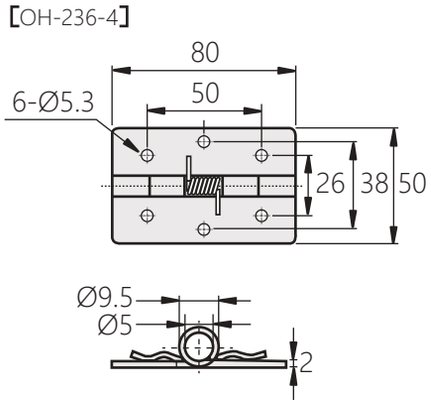

【OH-236-5】

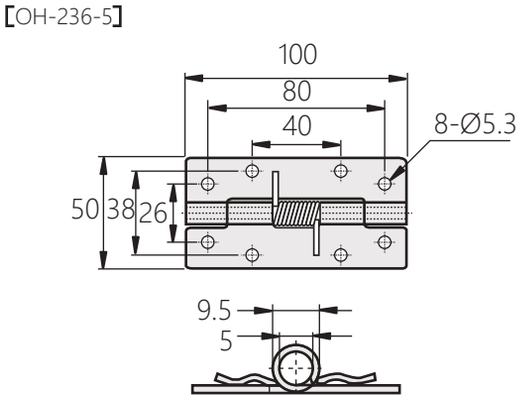

【OH-236-6】

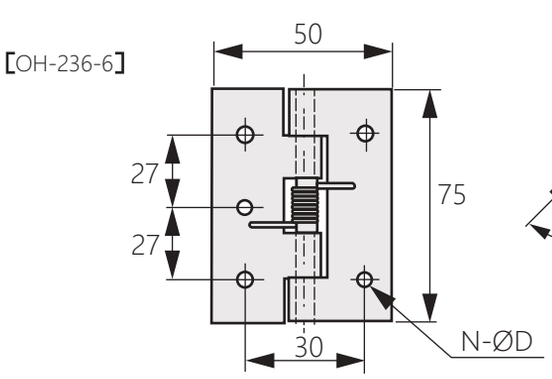

磁鐵拍門器

Constant torque Position Control Hinge

OH-714

CAD



商品介紹:

- 按壓開啟與關閉
  必要時可加裝門把手，以方便開啟
- 類別:單管、雙管
- 材質:ABS

Product description:

- Push to latch & unlatch Eliminates need for handles or knobs.
- Category: Single tube、Double tube
- Material: ABS

[OH-714-1]

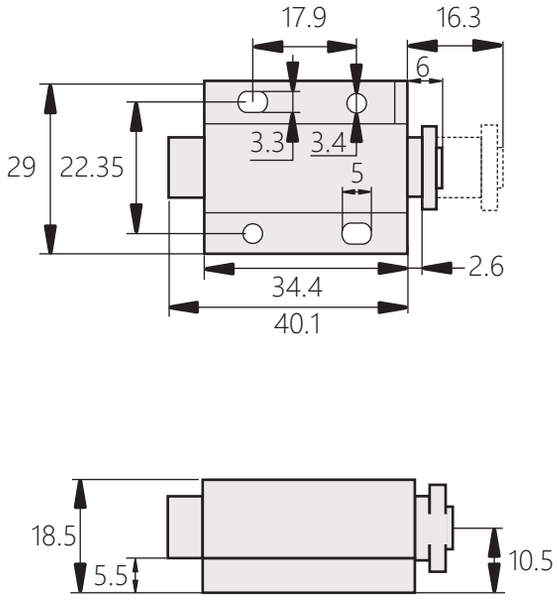

安裝示意圖

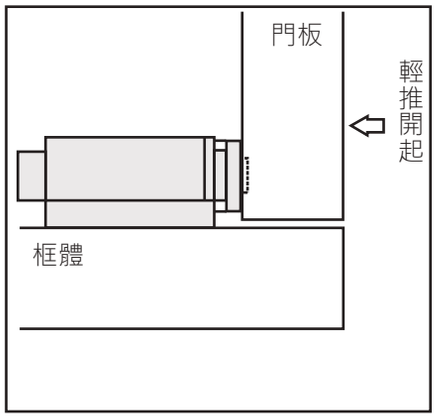

[OH-714-2]

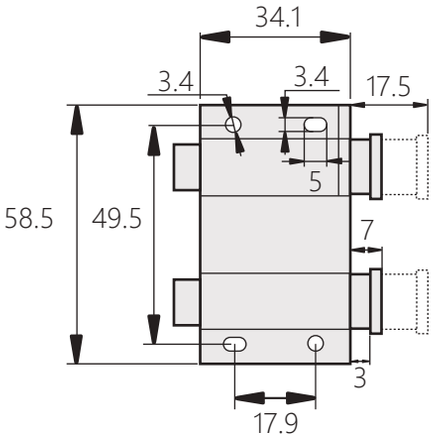

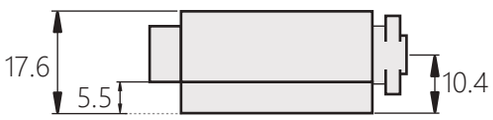

外露式合頁

Corner joint hinge

OH-117-1



商品介紹:

- 六個長圓孔安裝，方便調節及安裝變牢固
- 不鏽鋼拉絲蓋板，不鏽鋼軸
- 材質:鋅合金
- 表面處理:鍍亮鉻
- 安裝後表面無安裝痕跡
- 安裝時請調整位置後上緊螺絲

Product description:

- Six long round holes for easy adjustment and installation.
- Stainless steel brushed cover, stainless steel shaft.
- Material: Zinc alloy
- Surface treatment: Bright chrome plating
- No installation marks on the surface after installation.
- Please tighten the screws after adjusting the position during installation.

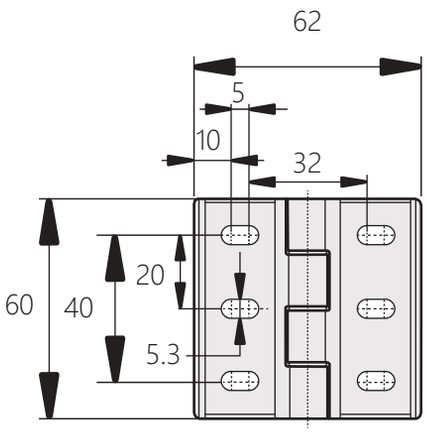

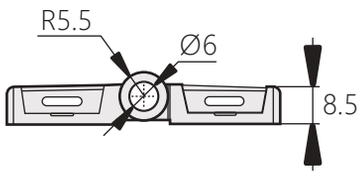

安裝示意圖

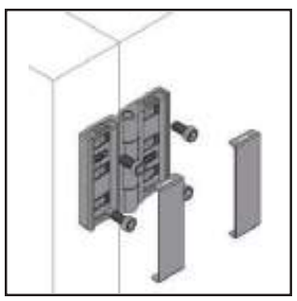

外露式合頁

Corner joint hinge

OH-117-2



商品介紹:

- 六個長圓孔安裝，方便調節及安裝變牢固
- 不鏽鋼拉絲蓋板，不鏽鋼軸
- 材質:鋅合金
- 表面處理:鍍亮鉻
- 安裝後表面無安裝痕跡
- 安裝時請調整位置後上緊螺絲

Product description:

- Six long round holes for easy adjustment and installation.
- Stainless steel brushed cover, stainless steel shaft.
- Material: Zinc alloy
- Surface treatment: Bright chrome plating
- No installation marks on the surface after installation.
- Please tighten the screws after adjusting the position during installation.

安裝示意圖

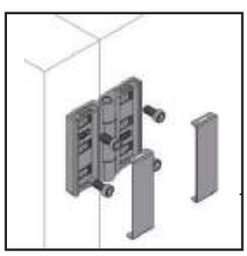

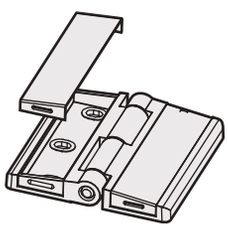

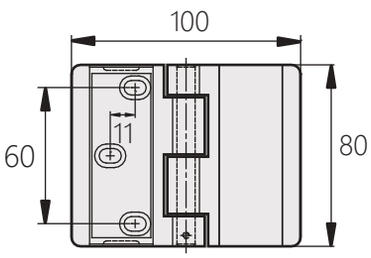

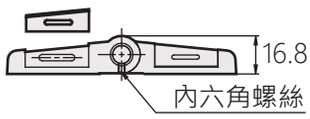

重承載型合頁

Corner joint hinge

OH-117-3



商品介紹:

- 配置墊圈，使鉸鏈無間隙，可防止裝上門板後因負載重量而產生的傾斜，適用於較重型的門板
- 材質:不鏽鋼、鋅合金
- 表面處理:主體-鏡面拋光，護蓋-髮絲拋光
- 用途:視設計情況使用

Product description:

- Dispose nylon washer, no interval on interval on the hinge, can prevent heavy door slope after installing.
- Material: Stainless steel, zinc alloy
- Surface treatment: Main Body-Mirror Surface buffing ; Cover-Hair-Line Surface Treatment.
- Use: Various cases from which design is use requested.

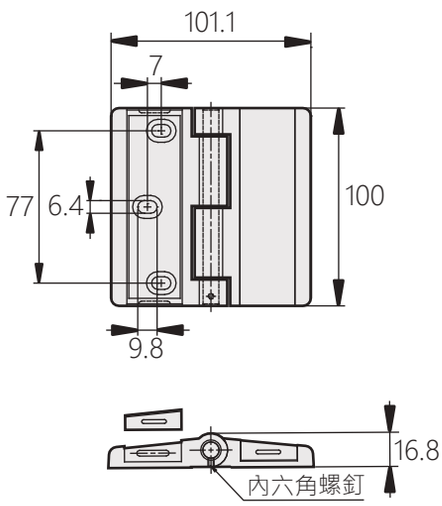

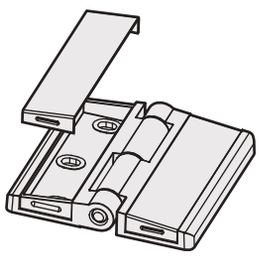

商品型號	材質
OH-117-3-C	鋅合金
OH-117-3-S	不鏽鋼

安裝示意圖

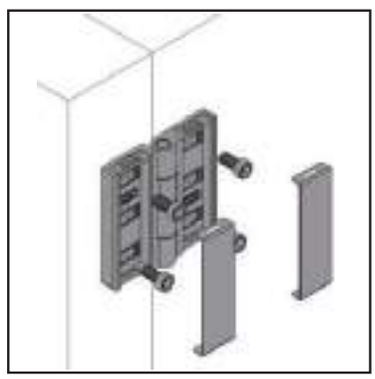

外露式合頁

Exposed Flat Hinge

OH-117-4





商品介紹:

- 橫豎孔安裝形式，更方便的調節門的密封程度
- 材質:鋅合金
- 表面處理:鍍亮鉻
- 用途:烤箱、恆溫恆濕箱、自動化設備等

Product description:

- Horizontal and vertical hole installation form, more convenient to adjust the degree of sealing of the door
- Material: Zinc alloy
- Surface treatment: Vibration Polish Finish
- Use: Oven, constant temperature and humidity chamber, automation equipment, etc.

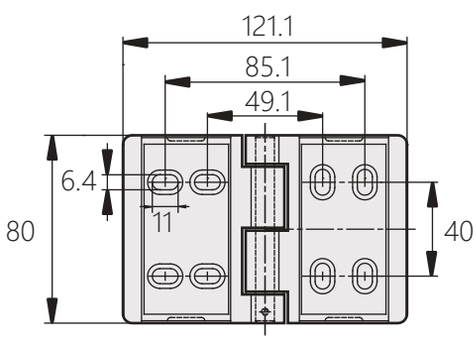

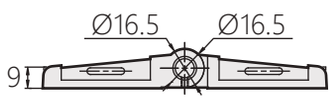

安裝示意圖

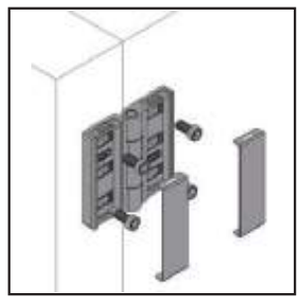

鋅合金動靜鉸鏈

OH-117-5

Zinc alloy dynamic and static hinge



商品介紹:

- 不鏽鋼蓋板，不鏽鋼軸
- 旋轉角度180°
- 材質:鋅合金
- 表面處理:噴砂鍍亮光鉻

Product description:

- Stainless steel cover, stainless steel shaft
- Rotation angle 180°
- Material: Zinc alloy
- Surface treatment: Sandblasted bright chrome plating

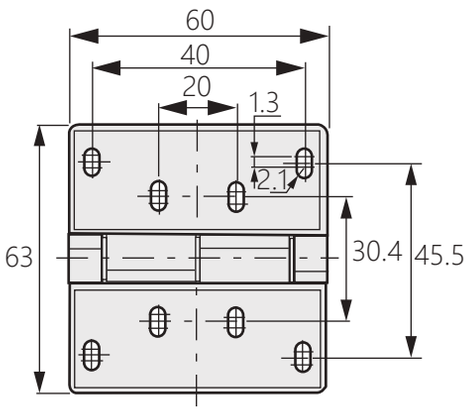

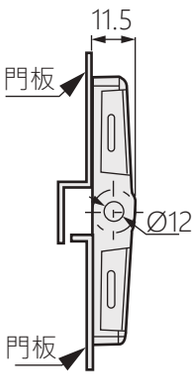

蓋板合頁

OH-117-6

Cover hinge



商品介紹:

- 軸心長圓孔設計，可滑動一定距離
- 不鏽鋼拉絲蓋板，無安裝痕跡
- 表面處理:拉絲拋光
- 操作:開門時，門會移動一定距離，使箱體內壓力洩壓，然後在完全打開門這樣可保證人員安全開啟門
- 材質:不鏽鋼
- 用途:工業工程、機械部品

Product description:

- Axial long round hole design, can slide a certain distance.
- Stainless steel barrier cover, no mounting traces.
- Surface treatment: Brushed polishing
- Operation: When the door is opened, the door will move a certain distance to relieve the pressure inside the box, and then the door can be opened completely to ensure the safety of the door.
- Material: Stainless steel
- Uses: Industrial engineering, mechanical parts.

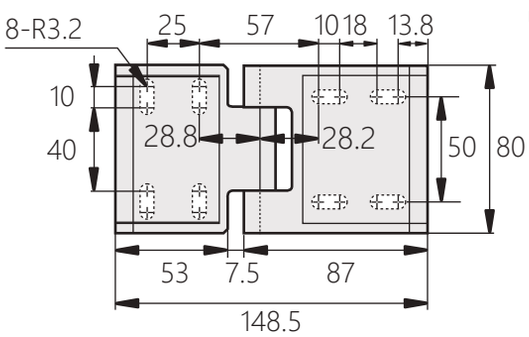

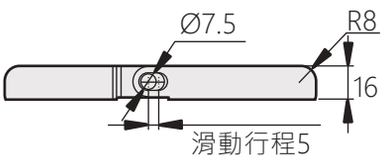

外露式限位合頁

Posistion Control Detent Hinge

OH-117-7



商品介紹:

- 六個長圓孔安裝，方便調節及安裝更牢固
- 不鏽鋼拉絲蓋板，不鏽鋼軸
- 安裝後表面無安裝痕跡
- 具有限位功能
- 材質:鋅合金
- 表面處理:珍珠鉻
- 備註:安裝時請調整位置後上緊螺絲
- 用途:烤箱、恆溫恆濕箱、自動化設備

Product description:

- Six long round holes for easy adjustment and firmer installationng.
- Stainless steel brushed cover, stainless steel shaft
- No installation marks on the surface after installation
- With limit function
- Specification: Zinc alloy
- Surface treatment: Pearl chrome
- Note: Please tighten the screws after adjusting the position during installation.
- Note: Please tighten the screws after adjusting the position during installation.

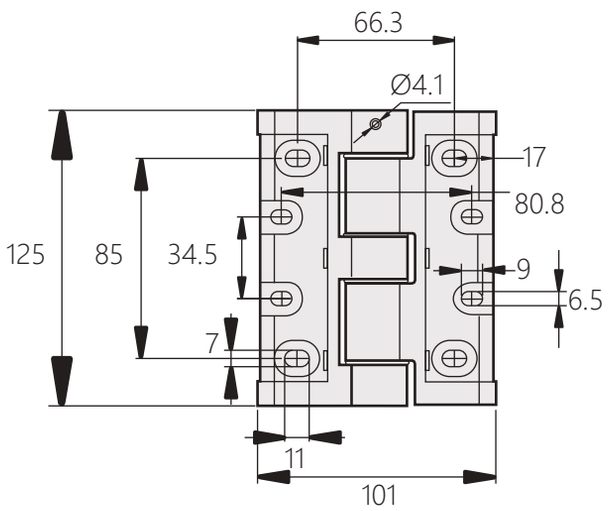

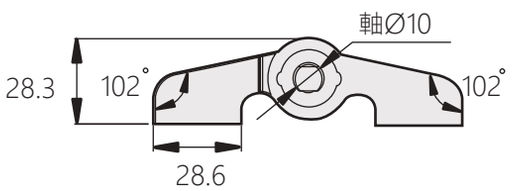

外露式調節合頁

Exposed Regulation Hinge

OH-117-8



商品介紹:

- 方便調節門的密封
- 不鏽鋼拉絲蓋板，安裝後表面無安裝痕跡
- 材質:鋅合金
- 表面處理:珍珠鉻
- 用途:環境試驗箱、大型烤箱、工業烘箱

Product description:

- Easy to adjust the seal of the door
- Stainless steel brushed cover, no mounting marks on the surface after installation.
- Material: Zinc alloy
- Uses: Environmental test chamber, large oven, industrial oven.

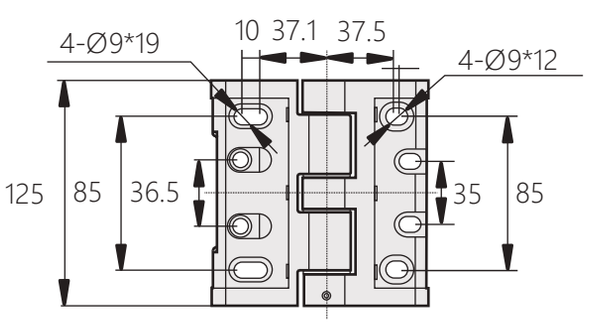

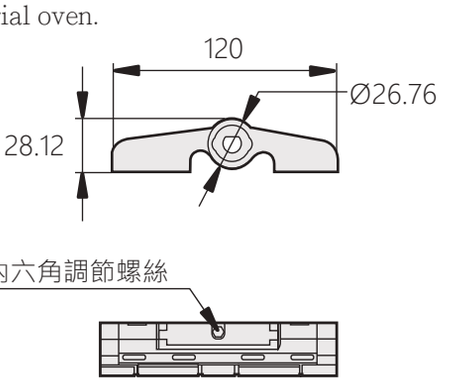

隱藏式合頁

OH-041

Concealed Hinge



商品介紹:

- 全不鏽鋼及鐵材質可選
- 左右兼用型
- 無孔型號為焊接安裝
- 材質:不鏽鋼、鐵
- 表面處理:振動研磨、鍍鎳
- 用途:機箱機櫃、網路機櫃、自動化設備

Product description:

- Available in all stainless steel and iron
- The shaft can be removed and replaced
- Non-porous model for welding installation
- Material: Stainless steel, iron
- Surface treatment: Vibration grinding, nickel plating
- Uses: Cabin cabinets, network cabinets, automation equipment.

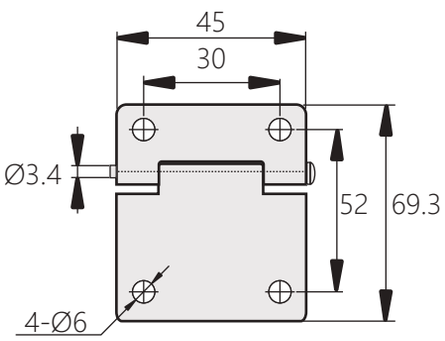

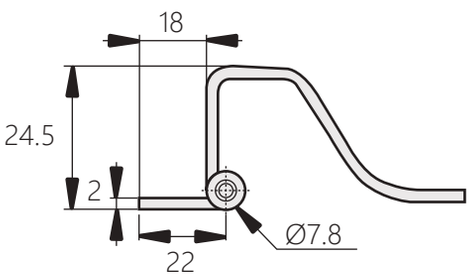

商品型號	材質
OH-041-1	鐵
OH-041-2	不鏽鋼

隱藏式合頁

OH-042

Concealed Hinge



商品介紹:

- 左右兼用型
- 無孔銲接式安裝
- 表面處理:振動研磨
- 材質:不鏽鋼(SUS304)
- 用途:電櫃、自動化設備、醫療設備等

Product description:

- Left and right
- Non-porous welded installation
- Surface treatment: Vibration grinding
- Material: Stainless steel (SUS304)
- Uses: Electric cabinets, automation equipment, medical equipment, etc.

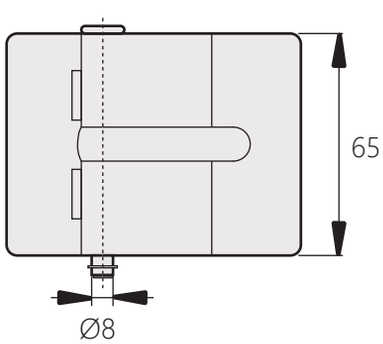

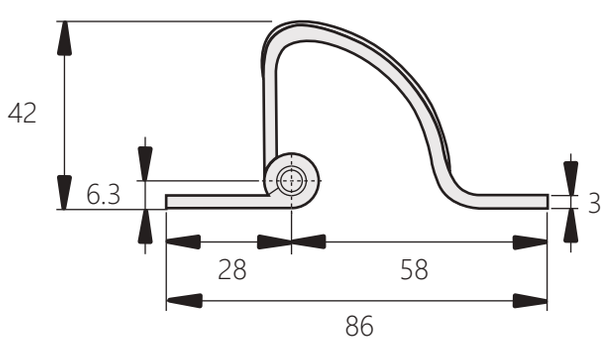

制動型合頁

Detent Hinge

OH-195



商品介紹:

- 防腐材料
- 使門板能開到預定角度，可省去為了保持定位而安裝附加零件的成本與勞力。
- 材質:塑鋼
- 用途:電子設備外殼、工業機箱、工業設備、展品/ 標誌

Product description:

- Corrosion-resistant materials
- Can hold doors open at predetermined angles and eliminate the cost and labor of installing additional components to maintain consistent positioning.
- Material: POM
- Uses: Electronics Enclosures, Industrial Equipment, Industrial Machinery, Exhibits/Signs.

［OH-195-1］

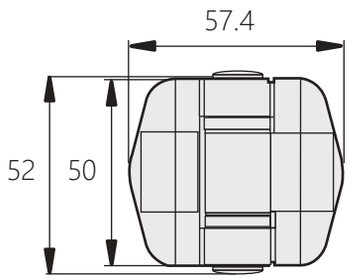

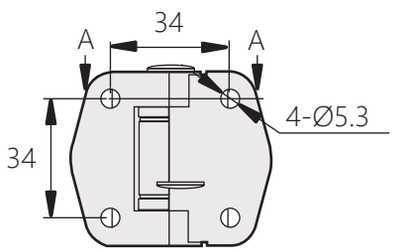

［剖面圖 A-A］

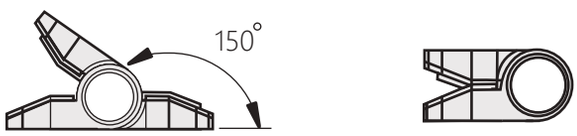

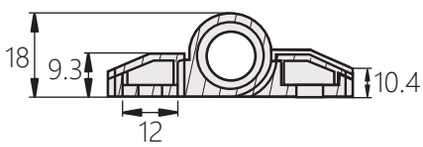

定位角度為 180° & 150° 兩段

［OH-195-2
OH-195-3
OH-195-4
OH-195-5］

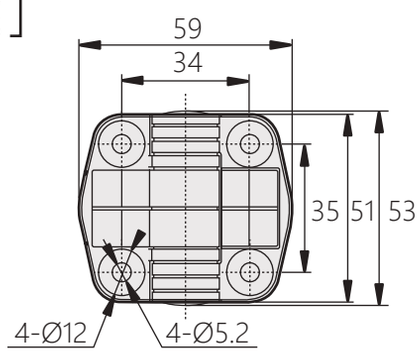

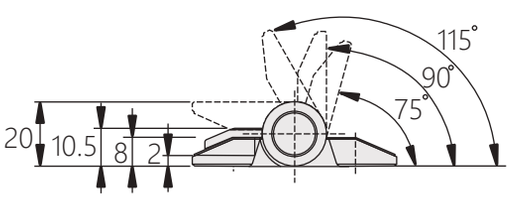

安裝示意圖

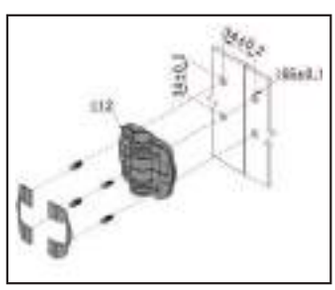

商品型號	限位角度
OH-195-1	180°、150°
OH-195-2	75°
OH-195-3	90°
OH-195-4	115°
OH-195-5	無限位

鋁合金蝶型合頁 OH-736

Aluminum Butt Hinge



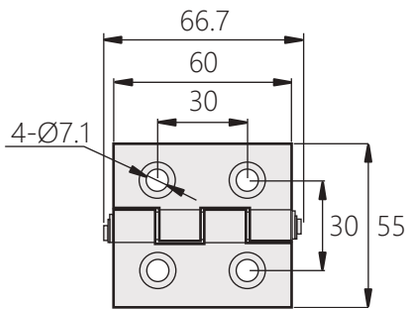

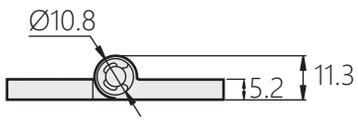

商品介紹:

- 配置墊圈，使鉸鏈無間隙，可防止裝上門板後因負載重量而產生的傾斜。
- 材質:主體 — 鋁合金，插銷 — 鐵
- 表面處理:陽極處理銀色、黑色電鍍
- 用途:不鏽鋼箱體、機械設備

Product description:

- The gasket is configured so that the hinge has no gaps to prevent tilting due to load weight after the door panel is attached.
- Material: Body — aluminum alloy, latch — iron
- Surface treatment: Anodized silver, black
- Uses: Stainless steel cabinet, mechanical equipment.

商品型號	顏色
OH-736-1	銀色
OH-736-2	黑色電鍍

鋁合金重承載型合頁 OH-208

Aluminum Alloy Heavy Duty Hinge



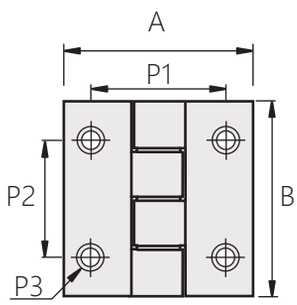

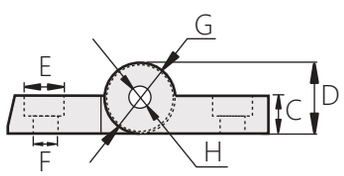

商品介紹:

- 配置墊圈，使鉸鏈無間隙，可防止裝上門板後因負載重量而產生的傾斜，適用於較重型的門板
- 材質:主體- 鋁合金、插銷- 不鏽鋼
- 表面處理:陽極處理黑色
- 用途:視設計情況使用

Product description:

- Configure the gasket so that the hinge has no gaps to prevent the door from being installed tilt due to load weight, suitable for heavy duty door panels.
- Material: Body - aluminum alloy, bolt - stainless steel
- Surface treatment: Anodized black
- Use: Use according to design conditions.

商品型號	A	B	C	D	E	F	G	H	P1	P2	P3
OH-208-1	70	90	10	19.5	10.5	6.5	18	6	47	72	M6
OH-208-2	70	75	10	19.5	10.5	6.5	18	6	47	54.5	M6
OH-208-3	70	50	10	19.5	10.5	6.5	18	6	47	30	M6
OH-208-4	40	50	6.5	13.5	9	5.5	13	6	26	30	M5
OH-208-5	40	30	6.5	13.5	9	5.5	13	6	26	16	M6

鋁製鉸鏈

Aluminum hinge

OH-845



商品介紹:

- 材質:鋁
- 表面處理:白色陽極,黑色陽極
- 最大開閉角度約為270°
- 除了OH-845-F86,
  OH-845-F6、OH-845-F8、OH-845-F開閉角度為190°
- 特殊用系列:OH-845-F系列
- 容許荷重是使用2pcs時的數值
- 用途:用於機櫃、機台等

Product description:

- Material: Aluminum
- Surface treatment: White anodizing, black anodizing
- A maximum opening and closing angle is about 270 °
- Other than OH-845-F6, OH-845-F8, OH-845-F opening and closing angle is 190 °
- Special series: OH-845-F series
- Allowable load is the value when using 2pcs
- Uses: For cabinets, machines, etc.

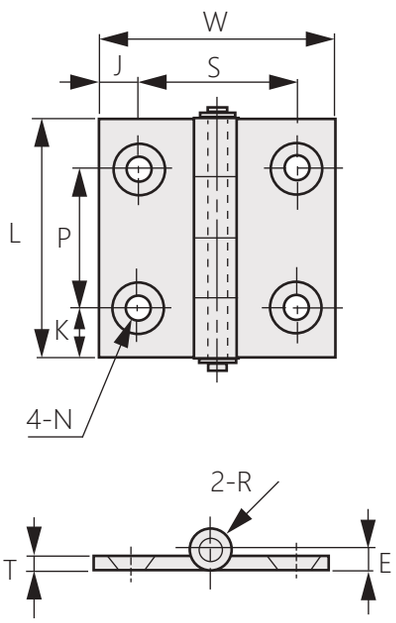

特殊型安裝示意圖

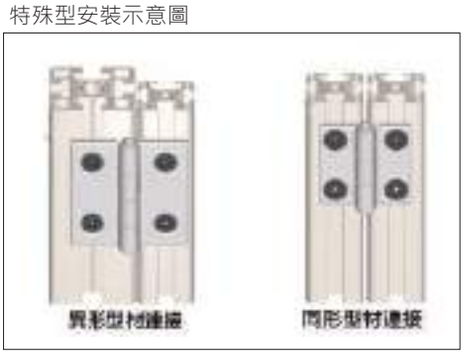

*此特殊用系列

商品型號 白色陽極	L	W	K	P	J	S	N 鑽孔	N 沉頭孔	T	E	R	容許荷重 KG	容許荷重 N
OH-845-F6-1	47	44.75	8.5	30	10.75	26.5	5.5	11	3.5	5.5	5.5	10	98
OH-845-F6-2							6.5	13					
OH-845-F8-1	63	54.25	13	37	15.25	31.5	5.5	11					
OH-845-F8-2							6.5	13					
OH-845-F-1		55.5			14	34	5.5	11					
OH-845-F-2							6.5	13					
OH-845-F86-1		62			12.5	37	6.5	13				15	147
OH-845-F86-2					11.5	39	6.5	13					

商品型號 黑色陽極	商品型號 白色陽極	L	W	K	P	J	S	N 鑽孔	N 沉頭孔	T	E	R	容許荷重 KG	容許荷重 N
OH-845-5B	OH-845-5W	47	36	11	25	7.5	21	5.5	11	3.5	5	5	10	98
OH-845-6B	OH-845-6W		48	8.5	30	8	32	6.5	13		5.5	5.5		
OH-845-8B	OH-845-8W	63	62	13	37	10	42							
OH-845-B	OH-845-W		80	10	43	16.5	47			4.5			15	147

長型鋁鉸鍊 OH-848

Long aluminum hinge



商品介紹:
- 材質:鋁合金
- 表面處理:陽極處理
- 容許荷重是使用2pcs時的數值

Product description:
- Material: Aluminum alloy
- Surface treatment: White anodizing, black anodizing
- Allowable load is the value when using 2pcs.

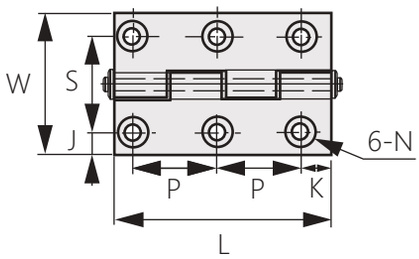

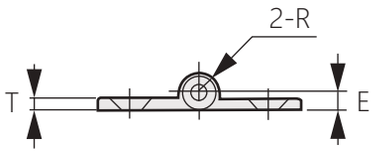

商品型號		L	W	K	P	J	S	N		T	E	R	容許荷重	
黑色	白色							鑽孔	沉頭孔				KG	N
OH-848-1B	OH-848-1W	66	36	8	25	7.5	21	5.5	11	3.5	5	5	15	147
OH-848-2B	OH-848-2W	78	48	9	30	8	32	6.5	13		5.5	5.5		
OH-848-3B	OH-848-3W	113	62	13.5	43	10	42							
OH-848-4B	OH-848-4W		80			16.5	47			4.5			23	220

限位蝶形鋁鉸鍊 OH-851

Limit butterfly aluminum hinge



商品介紹:
- 材質:鋁合金
- 表面處理:白色陽極
- 容許荷重是使用2pcs時的數值

Product description:
- Material: Aluminum alloy
- Surface treatment: White anodizing
- Allowable load is the value when using 2pcs.

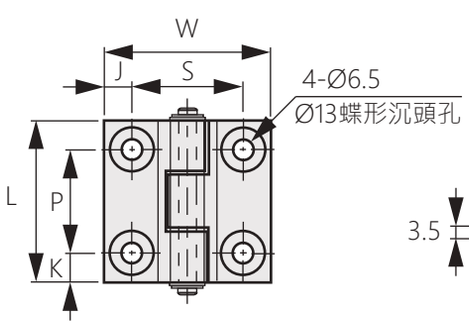

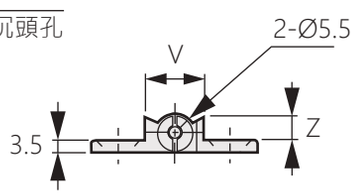

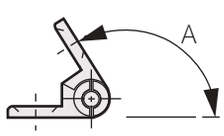

商品型號	A(角度)	L	W	K	P	J	S	V	Z	容許荷重	
										KG	N
OH-851-1	120	47	48	8.5	30	8	32	17	6.8	10	98
OH-851-2	135								5.4		
OH-851-3	150								4.2		
OH-851-4	120	63	62	13	37	10	42	21	7.3		
OH-851-5	135								5.8		
OH-851-6	150								4.5		

極低頭螺栓型鋁鉸鍊

OH-846

Very low head bolt type aluminum hinge



商品介紹:

- 最大開閉角度為180°
- 材質:鋁合金
- 表面處理:白色陽極
- 容許荷重是使用2pcs時的數值

Product description:

- Maximum opening and closing angle is 180 °
- Material: Aluminum alloy
- Surface treatment: White anodizing
- Allowable load is the value when using 2pcs.

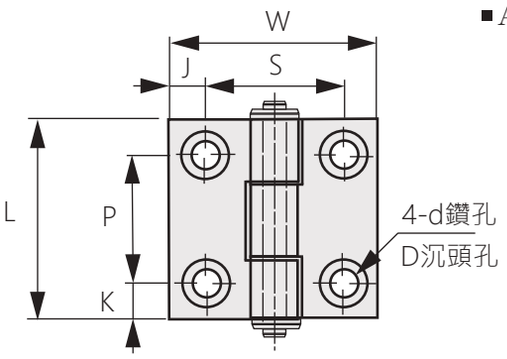

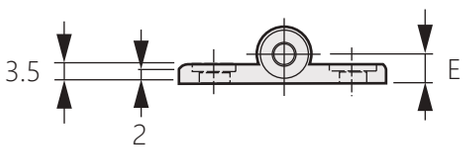

商品型號	L	W	K	P	J	S	d	D	E	容許荷重 KG	容許荷重 N
OH-846-1	47	36	11	25	7.5	21	5.5	10	5	10	98
OH-846-2		48	8.5	30	8	32	6.5	11	5.5		
OH-846-3	63	62	13	37	10	42					

短型鋁鉸鍊

OH-847

Short aluminum hinge



商品介紹:

- 材質:鋁合金
- 表面處理:陽極處理
- 容許荷重是使用2pcs時的數值

Product description:

- Material: Aluminum alloy
- Surface treatment: White anodizing, black anodizing
- Allowable load is the value when using 2pcs.

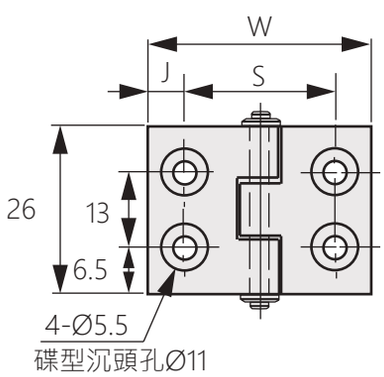

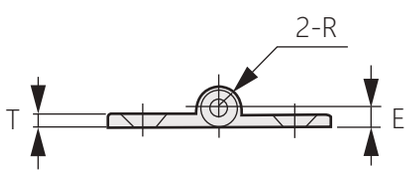

商品型號 黑色	商品型號 白色	W	J	S	T	E	R	容許荷重 KG	容許荷重 N
OH-847-1B	OH-847-1W	36	7.5	21	3.5	5	5	10	98
OH-847-2B	OH-847-2W	48	8	32		5.5	5.5		
OH-847-3B	OH-847-3W	62	10	42					
OH-847-4B	OH-847-4W	80	16.5	47	4.5			15	147

附突起鋁鉸鍊

OH-849

With raised aluminum hinge



商品介紹:

- 材質:鋁合金
- 表面處理:白色陽極
- 最大開閉角度約為190°
- 容許荷重是使用2pcs時的數值
- 具有突起設計，故安裝時不易偏移

Product description:

- Material: Aluminum alloy
- Surface treatment: White anodizing
- Maximum opening and closing angle is about 190 °
- Allowable load is the value when using 2pcs
- The convex design, it is not easy to produce lateral displacement during installation.

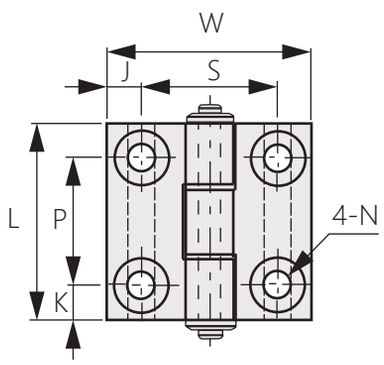

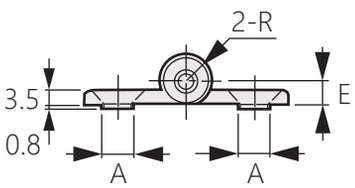

商品型號	L	W	K	P	J	S	N		E	A	R	容許荷重	
							鑽孔	碟型沉頭孔				KG	N
OH-849-1	47	36	11	25	7.5	21	5.5	11	5	5.5	5	10	98
OH-849-2		48	8.5	30	8	32	6.5	13	5.5	7.5	5.5		
OH-849-3	63	62	13	37	10	42				9.5			

旗式鉸鍊

OH-850

Flag hinge



商品介紹:

- 材質:鋁合金
- 表面處理:陽極處理
- 容許荷重是使用2pcs時的數值

Product description:

- Material: Aluminum alloy
- Surface treatment: Anodizing
- Allowable load is the value when using 2pcs.

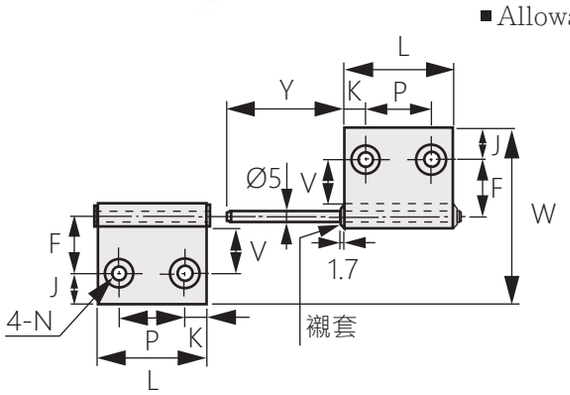

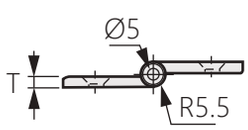

商品型號	L	W	K	P	J	F	V	N		T	Y	容許荷重	
								鑽孔	碟型沉頭孔			KG	N
OH-850-1	35	48	7.5	20	8	16	10.5	5.5	11	3.5	38.5	10	98
OH-850-2	40	62		25	10	21	15.5	6.5	13		43.5		
OH-850-3	50	80	10	30	14	26	20.5			4.5	53.5	15	147
OH-850-4					11.5	28.5	23						

鋁合金外露式平面合頁

Aluminum alloy exposed flat hinge

OH-135

CAD



商品介紹:
- 最大開啟角度180度
- 鉸鏈軸芯設計間隙，保證門板安裝精密度
- 開關門無聲音，更加環保
- 材質:鋁合金
- 表面處理:噴砂陽極
- 用途:LED檢測設備、半導體設備、自動化設備
- 備註:左右兼用

Product description:
- Maximum opening angle of 180 degrees
- Hinge shaft core design clearance to ensure door panel installation precision
- No sound when opening or closing the door, more environmentally friendly
- Material: Aluminum alloy
- Surface treatment: Sandblasted anode
- Uses: LED testing equipment, semiconductor equipment, automation equipment
- Note: left and right

[OH-135-2]

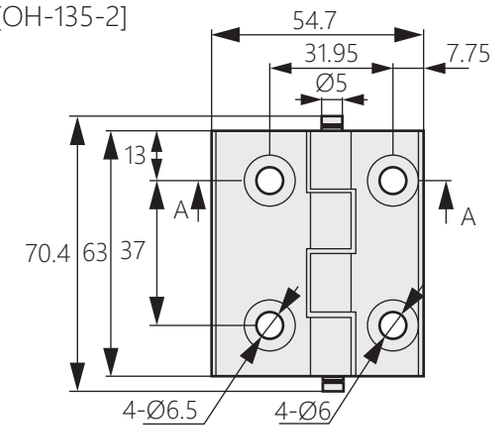

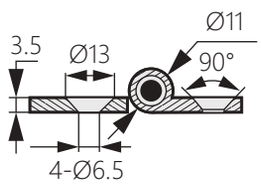

截面：A-A

[OH-135-1
OH-135-3]

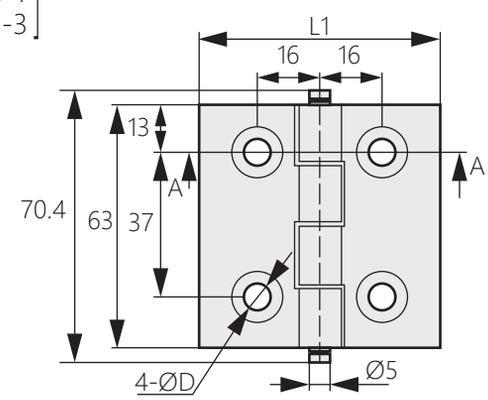

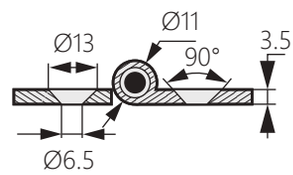

截面：A-A

[OH-135-4]

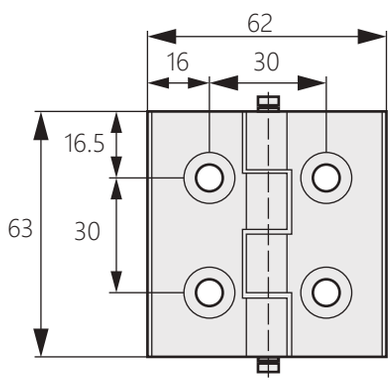

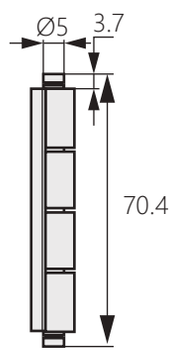

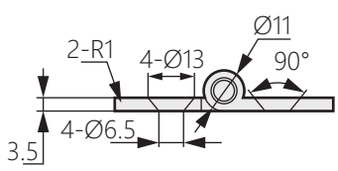

商品型號	L1	D
OH-135-1	47.4	6
OH-135-2		
OH-135-3	62	6.5
OH-135-4	62	6.5

平型鉸鏈

Flat hinge

OH-90



商品介紹:

- 材質:不鏽鋼(SUS304)
- 安裝方式:螺牙固定
- 容許荷重是使用2pcs時的數值
- 最大開閉角度約為275°
- 用途:機床、自動化設備、工業箱機等

Product description:

- Material: Stainless steel (SUS304)
- Installation method: Screw fixing
- Allowable load is the value when using 2pcs
- The maximum opening and closing angle is about 275°
- Uses: Machine tools, automation equipment, industrial box machines, etc.

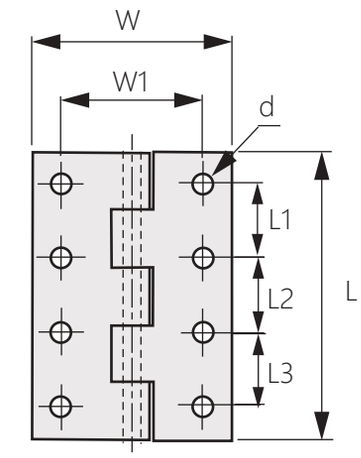

OH-90-1-1 OH-90-1-5
OH-90-1-2 OH-90-1-6
OH-90-1-3 OH-90-1-7
OH-90-1-4 OH-90-1-8

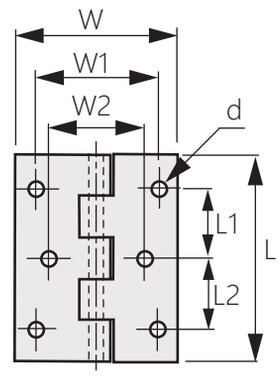

OH-90-2-1
OH-90-2-2
OH-90-2-3

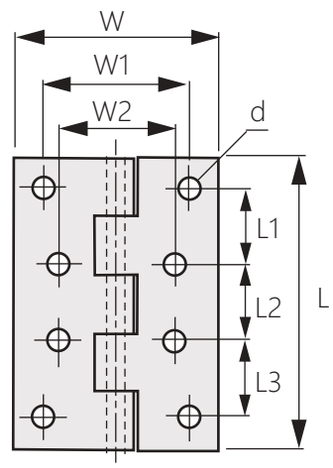

OH-90-3-1

商品型號	L	W	W1	W2	L1	L2	L3	C	C1	T	D	分割數	荷重(N)
OH-90-1-1	25	20	12		16			2	3.8	0.8	3.4	3	9.8
OH-90-1-2	30	20	12		22			2	3.8	0.8	3.4	3	9.8
OH-90-1-3	40	30	22		28			3	6.4	1.5	3.4	3	58.8
OH-90-1-4	50	30	22		36			3	6.4	1.5	4.5	5	68.6
OH-90-1-5	65	50	30		23	23		4	8.5	2	4.5	5	127.4
OH-90-1-6	75	50	30		27	27		4	8.5	2	5.5	5	147
OH-90-1-7	90	60	38		35	35		6	12.7	3	6.6	5	245
OH-90-1-8	100	60	38		26	26	26	6	12.7	3	6.6	5	294
OH-90-2-1	65	50	36	30	22	22		4	8.5	2	4.5	5	127.4
OH-90-2-2	75	50	36	30	26	26		4	8.5	2	5.5	5	147
OH-90-2-3	90	60	46	36	34	34		6	12.7	3	6.6	5	245
OH-90-3-1	100	60	46	36	26	26	26	6	12.7	3	6.6	5	294

不鏽鋼重承載型合頁

Heavy Duty Stainless Steel Butt Hinge

OH-737



商品介紹:

- 脫蠟鑄造，具有細緻的美觀表面，極密間隙，沙拉孔設計
- 在嚴苛的環境中提供出色的耐久性以及抗腐蝕能力
- 材質:不鏽鋼304
- 表面處理:鏡面拋光
- 用途:船舶、車輛、機械設備、廚房設備、屋外用設備

Product description:

- Dewaxing casting, with meticulous Beautiful surface, extremely tight gap, salad hole design.
- Provides excellent durability and corrosion resistance in harsh environments.
- Material: Stainless steel 304
- Surface treatment: Mirror Surface buffing
- Uses: Ships, Vehicles, Machinery Equipment, Kitchen equipment and outdoor equipment.

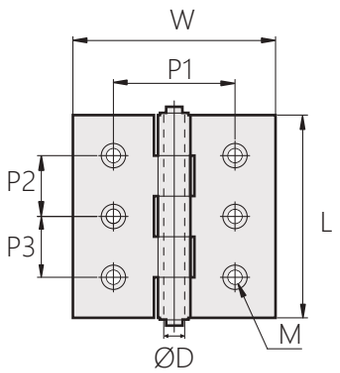

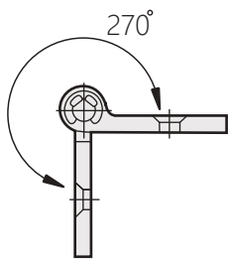

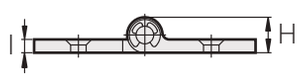

商品型號	ØD	H	L	W	P1	P2	P3	T	M	荷重(KG)
OH-737-1	8	16	100	100	60	30	30	6	M6	90
OH-737-2	8	16	75	75	50	40		6	M6	70
OH-737-3	6	14	65	65	40	35		5	M5	50
OH-737-4	6	14	50	50	35	20		5	M5	40

微型平面阻尼鉸鏈

Miniature Planar Damping Hinge

OH-220B



商品介紹:

- 阻尼值功能可將門停留在任意角度位置
- 材質:鋅合金（ZDC）
- 表面處理:黑色烤漆
- 用途:飲料機、醫療設備、商用廚房等
- 備註:左右兼用、可定制阻尼值0-3N/m

Product description:

- Damping function keeps the door at any angle
- Material: Zinc alloy (ZDC)
- Surface treatment: Black paint
- Uses: Beverage machines, medical equipment, commercial kitchens, etc.
- Note: Left and right,Customizable damping value: 0-3N / m

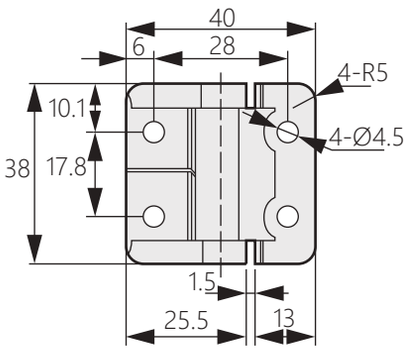

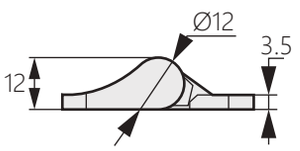

不鏽鋼重承載型合頁

OH-1064

Heavy Duty Stainless Steel Butt Hinge



商品介紹:

- 脫蠟鑄造，具有細緻的美觀表面，極密間隙，沙拉孔設計
- 在嚴苛的環境中提供出色的耐久性以及抗腐蝕能力。
- 材質:不鏽鋼316
- 表面處理:鏡面拋光
- 用途:船舶、車輛、機械設備、廚房設備、屋外用設備

Product description:

- Casting, with a fine aesthetic surface, a very close gap, the design of the salad hole or pan head screws.
- Provides excellent durability and corrosion resistance in harsh environments.
- Material: Stainless steel 316
- Surface treatment: Mirror Surface buffing
- Uses: Ships, Vehicles, Machinery,Equipment, Kitchen equipment and outdoor equipment.

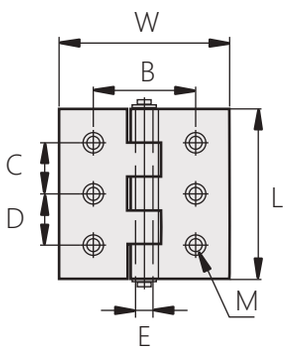

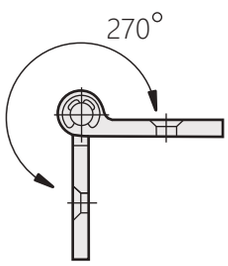

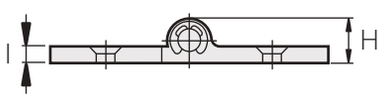

商品型號	L	W	I	B	C	D	E	H	M
OH-1064-1	100	100	6	60	30	30	8	16	6-M6
OH-1064-2	75	75	6	50	40		8	16	4-M6
OH-1064-3	65	65	5	40	35		6	14	4-M5
OH-1064-4	50	50	5	35	20		6	14	4-M5

快拆式塑膠合頁

OH-260

Plastic Lift off Hinge



商品介紹:

- 左右開門區分，適用於鋁型材箱體、半導體設備
- 材質:尼龍玻纖
- 用途:鋁型材箱體、半導體設備箱體

Product description:

- Open the door to the left and right, suitable for aluminum case, semiconductor equipment.
- Material: Nylon fiberglass
- Uses: Aluminum profile box, semiconductor Aequipment cabinet.

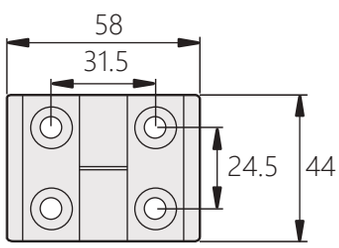

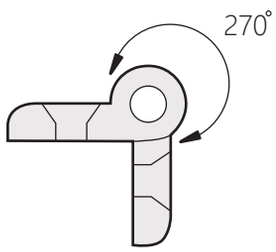

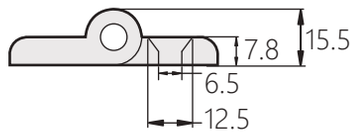

蝶形合頁

U Handle

OH-218

ZDC 鋅 CAD

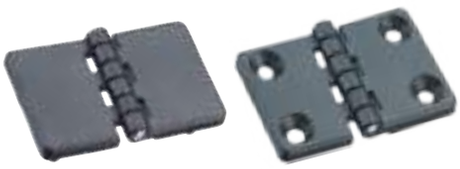

商品介紹:
- 材質:鋅合金
- 表面處理:黑色塗裝
- 用途:不鏽鋼箱體、環境設備箱

Product description:
- Material: Zinc alloy
- Surface treatment: Black coating
- Uses: Stainless steel cabinet, environmental equipment box.

[OH-218-1]

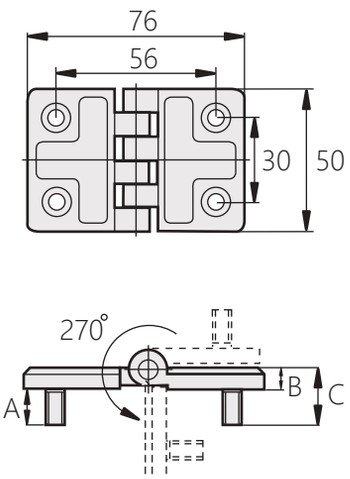

[OH-218-2]

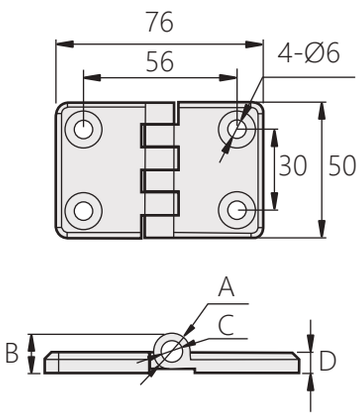

商品型號	A	B	C	D	備註
OH-218-1	14	6	20		螺柱型
OH-218-2	Ø10.3	11.5	Ø6	6	沉孔型

不鏽鋼重承載型合頁

Stainless steel heavy-duty hinge

OH-227

RoHS SUS 不鏽鋼 CAD



商品介紹:
- 材質:不鏽鋼
- 表面處理:黑色塗裝、拋砂面
- 用途:自動化設備、機箱機櫃、發電機組

Product description:
- Material: Stainless steel
- Surface treatment: Black、Sand surface
- Uses: Automation equipment, chassis cabinets, generator sets.

安裝示意圖

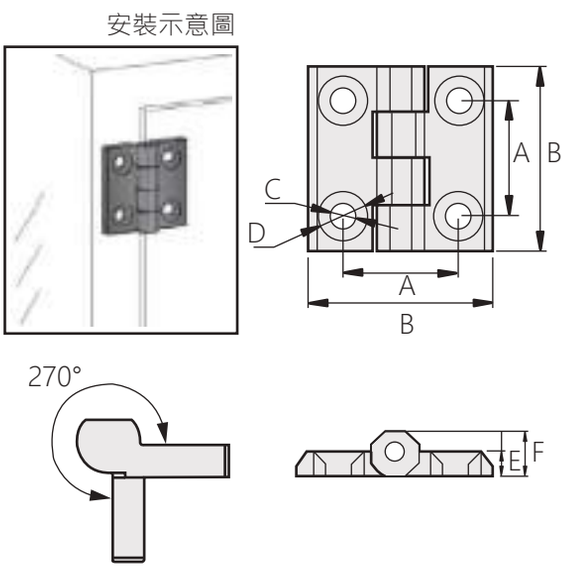

商品型號	顏色	A	B	C	D	E	F	荷重(KG)
OH-227-1-1	拋砂	36	60	8.4	16.5	8	14.5	60
OH-227-1-2	黑色							
OH-227-2-1	拋砂	30	50	6.3	12.3	6	12	50
OH-227-2-2	黑色							
OH-227-3-1	拋砂	25	40	5.2	10.2	5	9.7	45
OH-227-3-2	黑色							

外露式鉸鏈

OH-277

Butt Hing



商品介紹:

- 最大開啟角度180度
- 材質:鋅合金、不鏽鋼SUS304
- 表面處理:黑色烤漆、鍍亮鉻、鏡面拋光
- 用途:自動化設備、機箱機櫃、發電機

Product description:

- Maximum opening angle 180 degrees
- Material: Zinc alloy, stainless steel SUS304
- Surface treatment: Black paint, bright chrome, mirror finish.
- Uses: Automation equipment, chassis cabinets, generators.

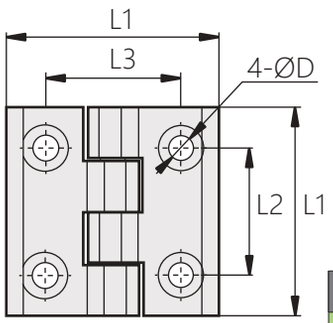

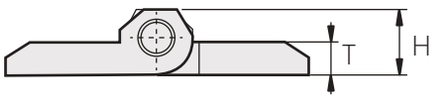

安裝示意圖



商品型號	材質	L1	L2	L3	T	H	D
OH-277-1-1	不鏽鋼	40	25	25	5	9	5.3
OH-277-1-2		50	30	30	6	12	7
OH-277-1-3		60	36	36	8	15	8.4
OH-277-2-1B	鋅合金(黑)	40	25	25.5	5.3	9.7	5.2
OH-277-2-1W	鋅合金(白)						
OH-277-2-2B	鋅合金(黑)	50	30	31.5	6.5	12	6.3
OH-277-2-2W	鋅合金(白)						
OH-277-2-3B	鋅合金(黑)	60	36	35	8	14	8.2
OH-277-2-3W	鋅合金(白)						

外露式鉸鏈

OH-3537

Exposed hinge



商品介紹:

- 最大開啟角度180度
- 材質:不鏽鋼SUS304
- 表面處理:震動研磨
- 用途:自動化設備、機箱機櫃、網路機櫃

Product description:

- Maximum opening angle 180 degrees
- Material: Zinc alloy, stainless steel SUS304
- Surface treatment: Black paint, bright chrome, mirror finish.
- Uses: Automation equipment, chassis cabinets, network cabinets.

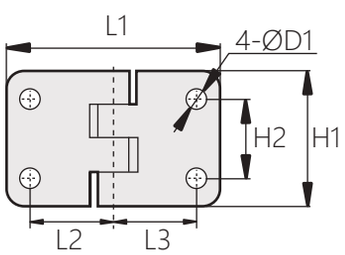

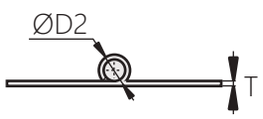

商品型號	L1	L2	L3	H1	H2	D1	D2	T
OH-3537-1	35	11.5	11.5	37	22.5	5.5	9	2
OH-3537-2	48	16	16	36	20	4		
OH-3537-3	60	23.5	23.5	38	23	5.5		1.4
OH-3537-4	54	24	14	50	34	4		2

蝶型合頁

U Handle

OH-2054-1



商品介紹:

- 材質:不鏽鋼脫蠟鑄造
- 表面處理:鏡面拋光
- 用途:工業工程、機械五金

Product description:

- Material: Stainless steel dewaxing casting
- Surface treatment: Mirror polishing
- Uses: Industrial engineering, mechanical hardware.

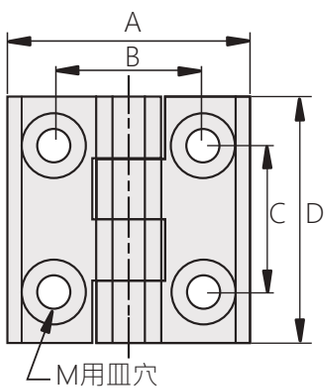

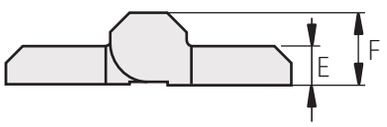

商品型號	A	B	C	D	E	F	M
OH-2054-1-1	60	36	36	60	8	15	8
OH-2054-1-2	50	30	30	50	6	11.5	6
OH-2054-1-3	40	25	25	40	5	9	5

蝶型合頁

Plastic Lift off Hinge

OH-2054-2



商品介紹:

- 材質:不鏽鋼
- 表面處理:拋砂面、黑色
- 用途:工業工程、機械五金

Product description:

- Material: Stainless steel
- Surface treatment: Sandblasted surface、 black
- Uses: Industrial engineering, mechanical hardware.

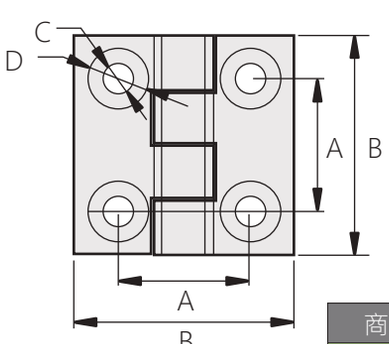

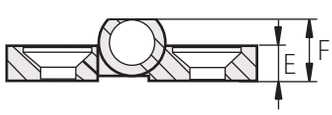

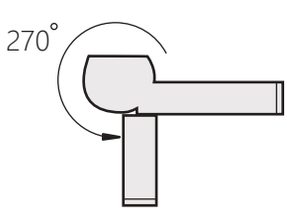

商品型號	顏色	A	B	C	D	E	F	荷重(KG)
OH-2054-2-1	拋砂面	36	60	8.4	16.5	8	14.5	60
OH-2054-2-2	黑色							
OH-2054-2-3	拋砂面	30	50	6.3	12.3	6	12	40
OH-2054-2-4	黑色							
OH-2054-2-5	拋砂面	25	40	5.2	10.2	5	9.7	30
OH-2054-2-6	黑色							

不鏽鋼扭矩鉸鏈

Stainless Steel Torque Hinge

OH-192



商品介紹:

- 可將門保持在任意角度，可以通過調節螺母改變扭矩值
- 阻尼部分採用墨墊，故不會產生金屬粉末和噪音
- 材質:不鏽鋼304
- 表面處理:震動研磨
- 用途:自動化設備、工業箱體、小型玻璃門等

Product description:

- Door can be held at any angle, change torque values by adjusting the nut.
- Damping part adopting graphite pad, without metal powders and noise.
- Material: Stainless steel 304
- Surface treatment: Vibration Ground
- Uses: Automation equipment, industrial box machine, small glass door.

[OH-192-1]

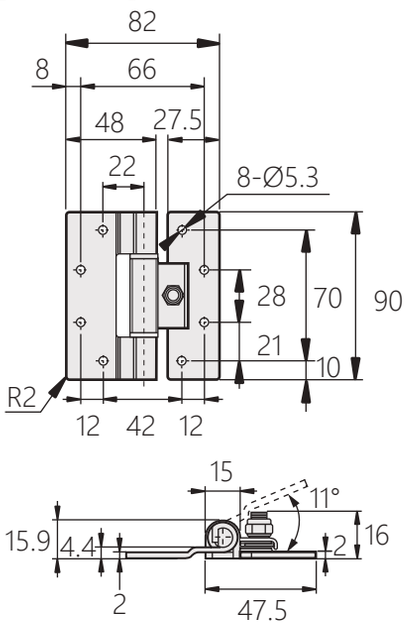

[OH-192-2]

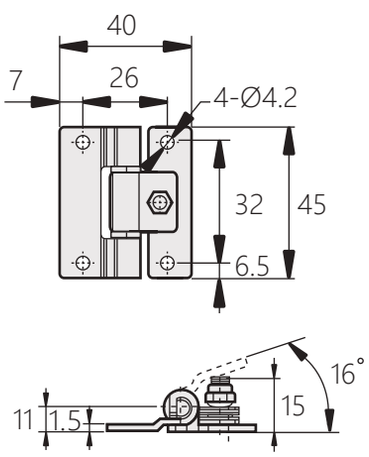

安裝示意圖

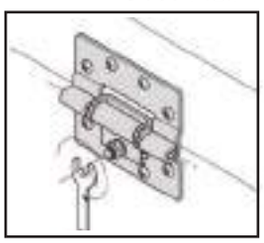

商品型號	額定負荷扭矩 (N.m)
OH-192-1	0-6
OH-192-2	0-2

不鏽鋼合頁

Stainless Steel Hinge

OH-2130



商品介紹:

- 材質:不鏽鋼304、316、201
- 表面處理:鏡光、拉絲
- 用途:交通車輛,工業設備

Product description:

- Material: Stainless steel 304, 316, 201
- Surface treatment: Mirror polishing, drawbench
- Uses: Traffic vehicles, industrial equipment.

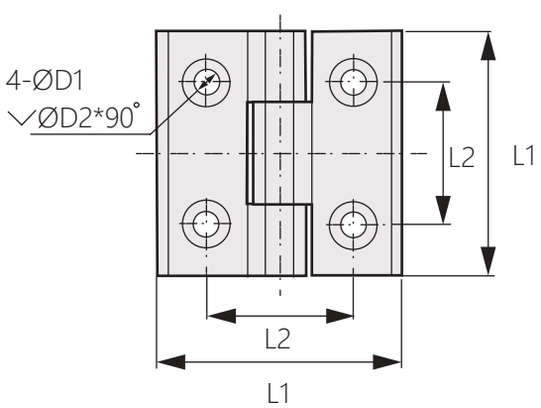

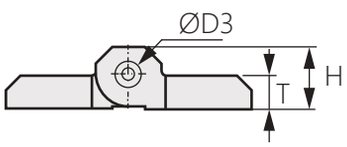

商品型號	L1	L2	H	D1	D2	D3	T
OH-2130-1	60	36	12.5	6.5	11.5	6	6
OH-2130-2	50	30	10.5	6.5	11.5	6	6
OH-2130-3	40	25	9	5.5	10	4	5

外露式鉸鏈

Flat hinge

OH-302



商品介紹:

- 左右兼用型
- 安裝方便快捷，最大開啟角度180度
- 材質:不鏽鋼(SUS304)、冷軋板
- 表面處理:鍍鋅、鍍鎳、震動研磨
- 用途:電櫃、電箱、工業箱體

Product description:

- Suitable for left and right hinging
- Easy and fast to install, low profile with 180 degree opening angle.
- Material: Cold rolled steet or stainless steel (SUS304)
- Surface treatment: Zinc plated, nickel plated, bright polishing
- Uses: Electric cabinet, electric box, industrial cabinet.



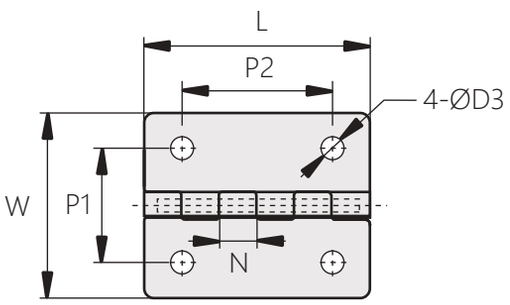

商品型號	材質	表面處理	結構	L	W	T	P1	P2	D1	D2	D3	N
OH-302-1-1	不鏽鋼	震動研磨	有孔	38	31	0.9	19	25.5	2.5	4.3	4	6.3
OH-302-2-1	冷軋板	鍍鎳	有孔						2.3			
OH-302-2-2		鍍鋅	無孔	37	32	1.2			3	5.6		9
OH-302-2-3			有孔				20	26			4.5	

不鏽鋼鉸鏈

Stainless steel hinge

OH-0217



商品介紹:

- 左右兼用型
- 最大開啟角度180度
- 大小邊設計，符合門板與門框的性能要求
- 材質:不鏽鋼(SUS304)
- 表面處理:拉絲拋光
- 用途:蒸汽櫃、廚櫃、工業烤箱等

Product description:

- Suitable for left and right hinging
- Low profile with 180 degree opening angle
- Large and small side design, suitable for the requirements of door panel and door frame
- Material: Stainless steel (SUS304)
- Surface treatment: Brushed polishing
- Uses: Steam cabinet, kitchen cabinet, industrial oven.

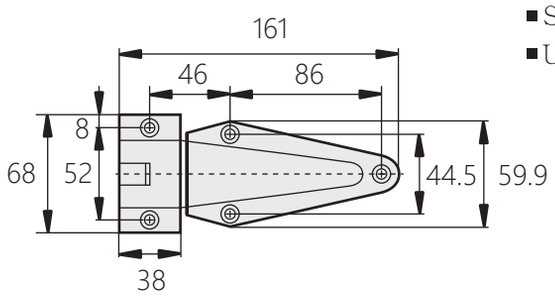

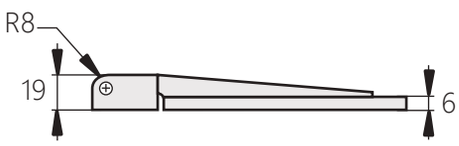

不鏽鋼鉸鏈 OH-0336

Stainless steel hinge



商品介紹:
- ■左右兼用型
- ■最大開啟角度180度
- ■大小邊設計，符合門板與門框的性能要求
- ■材質:不鏽鋼(SUS201)
- ■表面處理:拉絲拋光
- ■用途:蒸汽櫃、廚櫃、工業烤箱等

Product description:
- ■Suitable for left and right hinging
- ■Low profile with 180 degree opening angle
- ■Large and small side design, suitable for the requirements of door panel and door frame
- ■Material: Stainless steel (SUS201)
- ■Surface treatment: Brushed polishing
- ■Uses: Steam cabinet, kitchen cabinet, industrial oven.

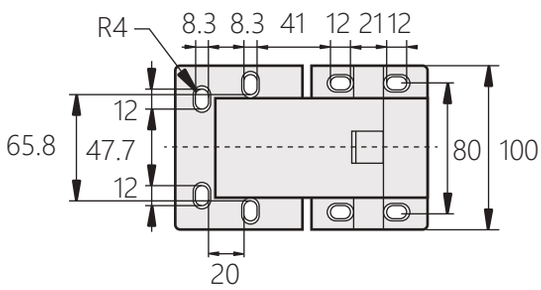

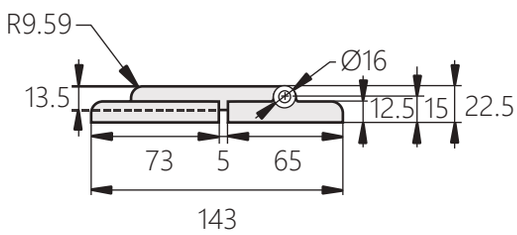

平面鉸鏈 OH-0337

Flat hinge



商品介紹:
- ■最大開啟角度180度
- ■小型鉸鏈，方便安裝於空間狹小的門板
- ■材質:冷軋鋼板(SPCC)
- ■表面處理:鍍藍鋅、鍍鎳
- ■用途:機箱機櫃、自動化設備等、小型機櫃

Product description:
- ■Low profile with 180 degree opening angle
- ■Small hinge, easy to install in the narrow space door panel
- ■Material: Cold rolled steel plate (SPCC)
- ■Surface treatment: Zinc blue plated, nickel plated
- ■Uses: Chassis cabinet, automation equipment, small cabinets.

[OH-0337-1]

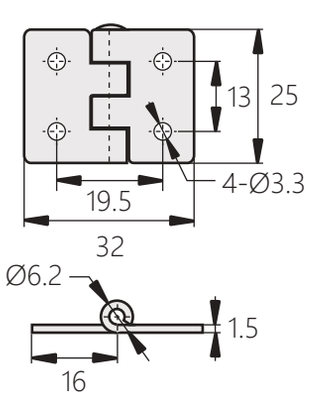

[OH-0337-2]

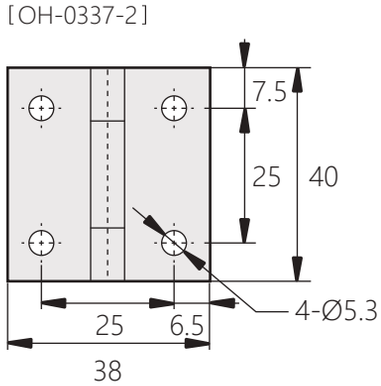

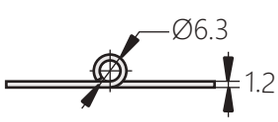

商品型號	表面處理
OH-0337-1	鍍藍鋅
OH-0337-2	鍍鎳

合頁鉸練

Hinge hinge

OH-3046



商品介紹:

- 材質:不鏽鋼304.316
- 表面處理:鏡光,拉絲
- 最大靜載荷:60KG
- 用途: 組裝房,機械設備,不鏽鋼門,豪華木門等, 旋轉角度0-180°

Product description:

- Material: Stainless steel 304.316
- Surface treatment: Mirror Poloshing, drawbench
- MAX Load weight: 60KG
- Use: Movable assembly room, mechanical equipment, Stainless steel doors, luxrious wood doors, etc. Angle of rotation is 0-180°.

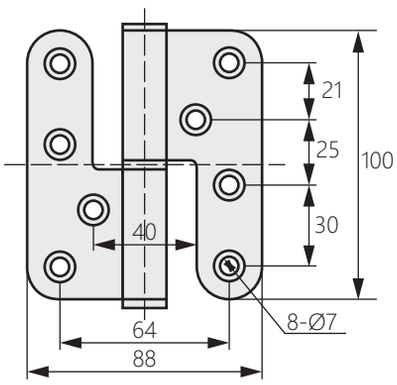

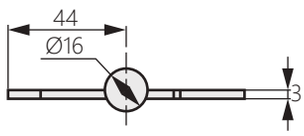

商品型號	方向
OH-3046L	左開
OH-3046R	右開

冷凍庫櫃門工業設備儀器加厚合頁

Hinge hinge

OH-3055



商品介紹:

- 材質:不鏽鋼304.316
- 表面處理:鏡光,拉絲
- 最大靜載荷:60KG
- 用途: 組裝房,機械設備,不鏽鋼門,豪華木門等, 旋轉角度0-180°

Product description:

- Material: Stainless Steel 304.316
- Surface treatment: Mirror Poloshing, drawbench
- MAX Load weight: 60KG
- Use: Movable assembly room, mechanical equipment, stainless steel doors, luxrious wood doors, etc. Angle of rotation is 0-180°.

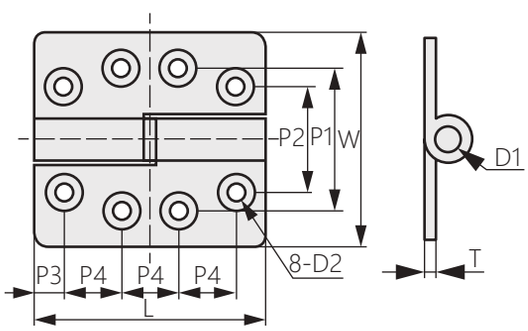

商品型號	L	W	T	P1	P2	P3	P4	D1	D2
OH-3055-1L/R	50	50	2	35	25	7	12	10	4.3
OH-3055-2L/R	65	60	2.5	40	30	8.5	16	12	5.3
OH-3055-3L/R	75	70	3	50	40	11	18	14	6.3

隱藏式合頁
OH-005

Concealed hinge



商品介紹:
- 轉動部分分兩塊先後開啟
- 隱藏式安裝
- 材質:鋅合金
- 表面處理:無光黑
- 用途:自動化設備、機箱機櫃、網路機櫃

Product description:
- The rotating part is opened in two pieces
- Hidden installation
- Material: Zinc alloy
- Surface treatment: Matt black
- Uses: Automation equipment, chassis cabinets, network cabinets.

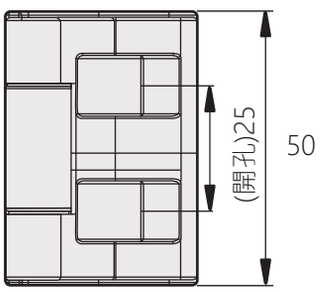

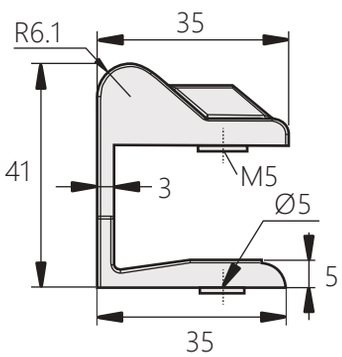

安裝示意圖

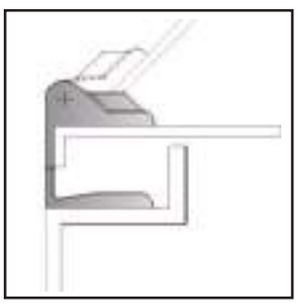

外露式合頁
OH-223

Exposed hinge



商品介紹:
- 大小邊鉸鏈、櫥櫃鉸鏈、凸門鉸鏈
- 大小邊設計，方便開啟和安裝
- 左右兼用型
- 材質:鋅合金
- 表面處理:黑色烤漆

Product description:
- Large and small hinges, cabinet hinges, Hinge door hinge
- Large and small design for easy opening and installation
- Left and right
- Material: Zinc alloy
- Surface treatment: Black paint

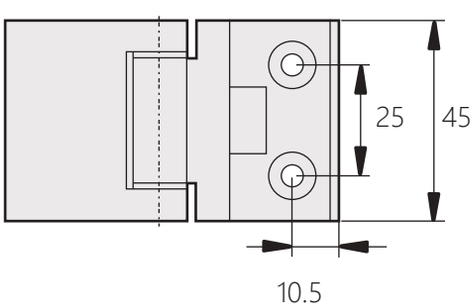

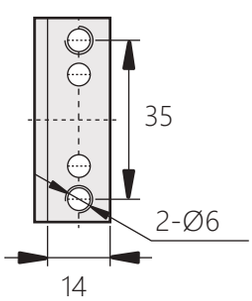

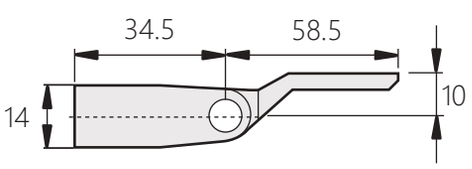

不鏽鋼鉸鏈 OH-506

Stainless steel hinge



商品介紹:
- 左右兼用型
- 最大開啟角度180度
- 材質:不鏽鋼(SUS201)
- 表面處理:拉絲拋光
- 用途:蒸汽櫃、廚櫃、工業烤箱等

Product description:
- Suitable for left and right hinging
- Low profile with 180 degree opening angle
- Material: Stainless steel (SUS201)
- Surface treatment: Brushed polishing
- Uses: Steam cabinet, kitchen cabinet, industrial oven.

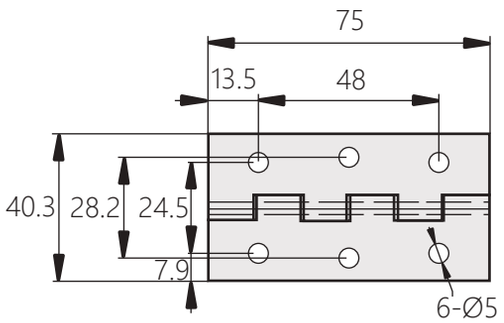

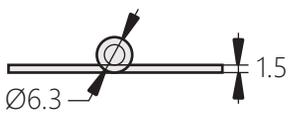

外露式鉸鏈 OH-222

Exposed hinge



商品介紹:
- 左右兼用型
- 最大開啟角度180度
- 材質:鋅合金(ZDC)
- 表面處理:噴無光黑
- 用途:電櫃、電箱、工業設備等
- 備註:安裝時需要將鉸鏈拆卸

Product description:
- Suitable for left and right hinging
- Low profile with 180 degree opening angle
- Material: Zinc Alloy (ZDC)
- Surface treatment: Matt black spray
- Uses: Electrical cabinet, electrical box, industrial equipment.
- Note: Need to disassemble the hinges when installing.

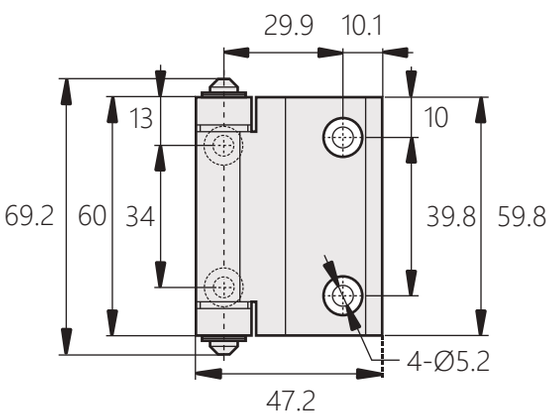

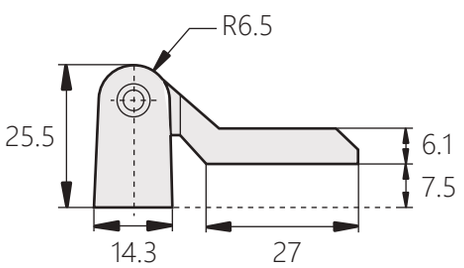

隱藏式合頁
Concealed Hinge

OH-040



商品介紹:
- 全不鏽鋼材質，大小邊設計，適合多種門板
- 左右開門兼用，兩種結構大小可選
- 材質:不鏽鋼
- 表面處理:振動研磨
- 安裝時請用M6螺絲或焊接安裝
- 用途:電箱、電櫃、小型機櫃等

Product description:
- All stainless steel, large and small design, suitable for a variety of door panels
- Open and use the door left and right, two structure sizes are optional
- Material: Stainless steel
- Surface treatment: Vibration grinding
- Install with M6 screws or soldering when installing
- Uses: Electric boxes, electric cabinets, small cabinets, etc.

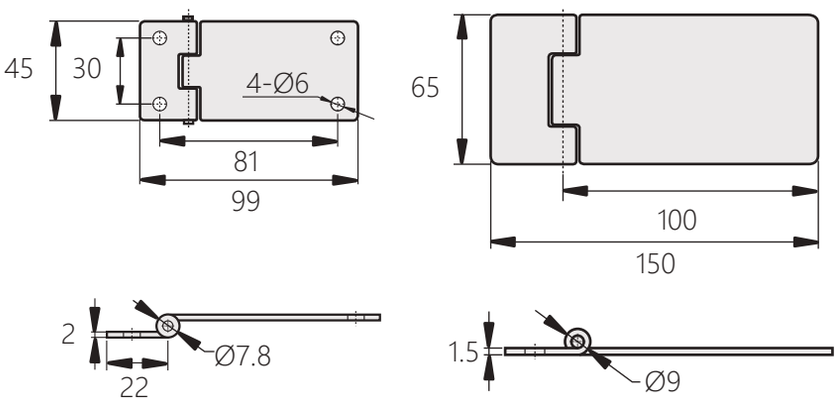

商品型號	規格
OH-040-1	有孔
OH-040-2	無孔

隱藏式合頁
Concealed Hinge

OH-045



商品介紹:
- 左右兼用型
- 可根據需要尺寸折彎
- 材質:冷軋鋼板
- 表面處理:鍍彩鋅
- 可訂製不鏽鋼材質
- 用途:機箱機櫃、電箱

Product description:
- Left and right
- Can be bent according to the size required
- Non-porous model for welding installation
- Surface treatment: Chrome plating
- Custom stainless steel
- Uses: Chassis cabinet, electric box.

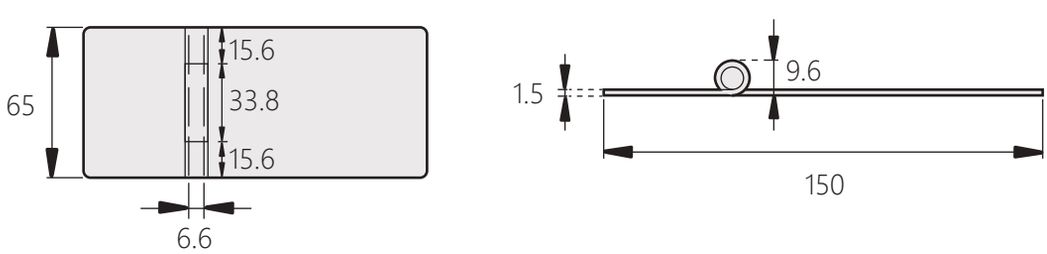

不鏽鋼小型合頁

Stainless Steel hinge-Mini Type

OH-735



商品介紹:

- 沖壓鉸鏈結構
  簡單集成和安裝簡便，無需額外成本
- 材質:不鏽鋼
- 表面處理:震動研磨
- 用途:電子設備外殼、工業機箱、工業設備、船舶

Product description:

- Stamped hinge construction
  Easy integration and simple installation without added cost
- Material: Stainless steel
- Surface treatment: Vibration polish finish
- Uses: Electronics Enclosures, Industrial Equipment, Industrial Machinery, Ship.

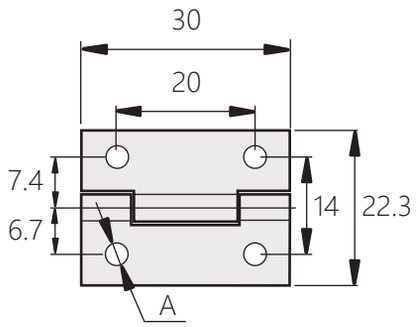

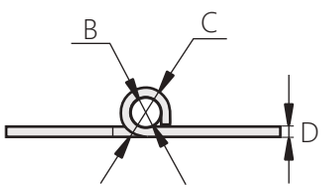

商品型號	A	B	C	D
OH-735	4×Ø3.0	Ø2.0	Ø4.0	0.8

微調式鋅合金快拆合頁

Adjustable Compression Lift-off Hinge

OH-255



商品介紹:

- 可微調整角度，使防水密封膠條能確實密封。並可輕鬆、快速且安全的將門卸下，無需使用任何的工具
- 材質:主體-鋅合金、螺絲-不鏽鋼
- 表面處理:黑色塗裝
- 用途:電子設備外殼、工業機箱、工業設備、食品機械

Product description:

- Inserted type.Double point hinges are available in right and left opening types.
- Material: Main body - zinc alloy, screw - stainless steel
- Surface treatment: Black coating
- Uses: Electronic equipment casing, industrial chassis, industrial equipment, food machinery.

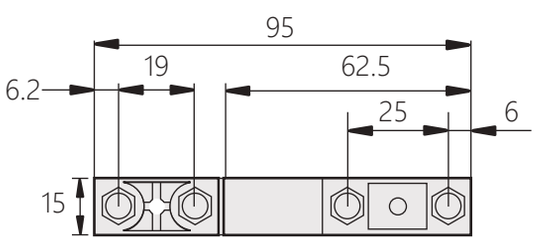

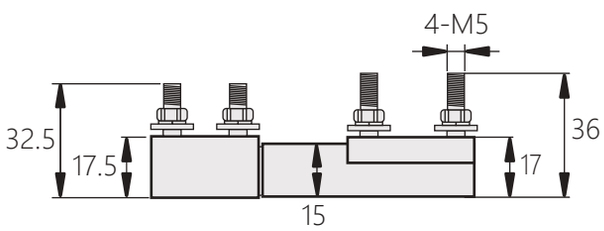

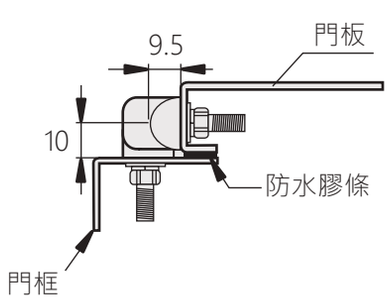

電箱拆卸鉸鏈

OH-033

Electric box removal hinge



商品介紹:

- 板材加厚，承載性能更佳
- 材質:鐵（SPCC）
- 表面處理:鍍藍鋅
- 用途:電箱、電櫃、小型機櫃
- 備註:配墊片增加耐磨性能

Product description:

- Thicker plates for better load carrying performance
- Material: Iron (SPCC)
- Surface treatment: Blue zinc plating
- Uses: Electric box, electric cabinet, small cabinet.
- Note: With gasket to increase wear resistance

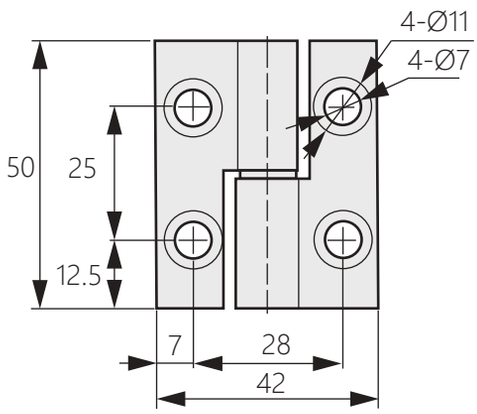

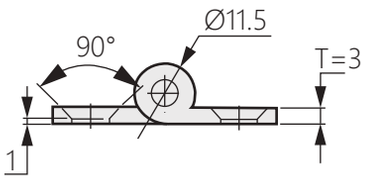

商品型號	方向
OH-033-L	左開
OH-033-R	右開

尼龍蝶型合頁

OH-401

Stainless Steel Hinge



商品介紹:

- 沖壓鉸鏈結構簡單集成和安裝簡便，無需額外成本
- 材質:不鏽鋼304
- 表面處理:震動研磨
- 用途:電子設備外殼、工業機箱、工業設備、船舶

Product description:

- Stamped hinge construction
  Easy integration and simple installation without added cost.
- Material: Stainless Steel 304
- Surface treatment: Vibration Polish Finish
- Electronics Enclosures, Industrial Equipment,Industrial Machinery, Ship.

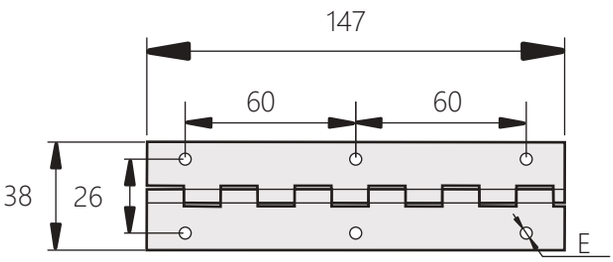

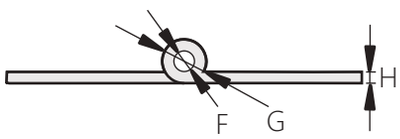

商品型號	E	F	G	H
OH-401	6×Ø4.2	Ø2.2	Ø4.7	1.2

外露式鉸鏈

Exposed hinge

OH-0221

ZDC 鋅 CAD



商品介紹:
- 六孔安裝，左右兼用型
- 最大開啟角度180度
- 材質:鋅合金(ZDC)
- 表面處理:無黑光
- 用途:機床、自動化設備、工業箱體等

Product description:
- Six holes installed, suitable for Left and right hinge
- Low profile with 180 degree opening angle
- Material: Zinc Alloy (ZDC)
- Surface treatment: Matt black
- Uses: Machine tool, automation equipment, industrial cabinet.

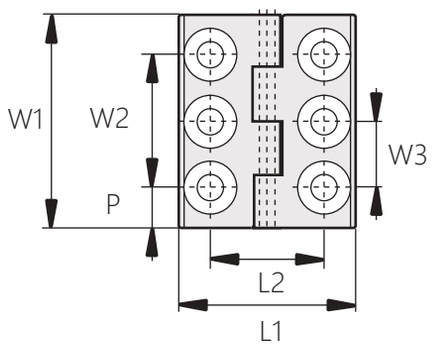



商品型號	L1	L2	W1	W2	W3	D	P	T
OH-0221-1	55	38	65	40	20	7	12.5	5.5
OH-0221-2	65	40	80	50	25	8.5	15	

隱藏式鉸鏈

Concealed Hinge

OH-193

RoHS SUS 不鏽鋼 CAD



商品介紹:
- 左右兼用型
- 最大開啟角度180度
- 材質:不鏽鋼(SUS304)
- 表面處理:震動研磨
- 用途:電櫃、自動化設備、醫療設備等
- 備註:帶有台階形式，適合有一定高度的門板

Product description:
- Suitable for Left and right hinge
- Low profile with 180 degree opening angle
- Material: Stainless steel (SUS304)
- Surface treatment: Vibratuib Ground
- Uses: Electric cabinet, automation equpment, medical equipment.
- Note: Suitable for a certain height of the door with step form.

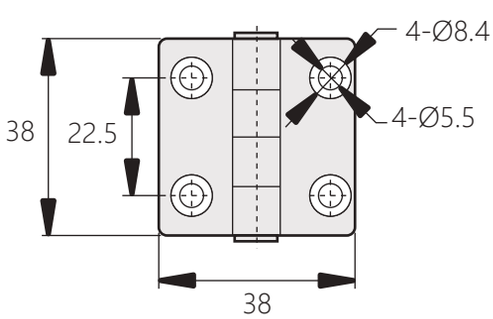

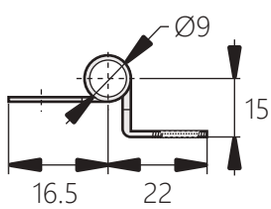

安裝示意圖

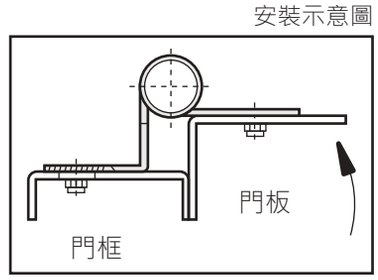

不鏽鋼轉角合頁

CORNER HINGES(With BEARINGS)

OH-1727



商品介紹:

- ■內裝軸承，轉動順暢
- ■適合開關劇烈的門
- ■左右兼用
- ■材質:不鏽鋼鑄件(SUS 304)
- ■表面處理: 鏡面拋光
- ■使用荷重:40Kg(縱向使用2個門時的參考重量)
- ■用途:冷凍冷藏庫、實驗設備、LED、烘烤設備、貨櫃車輛等中型門用

Product description:

- ■Built-in bearing for smooth rotation
- ■Suitable for switch violent doors
- ■Use both left and right
- ■Material: Stainless steel casting (SUS 304)
- ■Surface treatment: Mirror polishing
- ■Use load: 40Kg (reference weight when using 2 doors vertically)
- ■Uses: Freezer, laboratory equipment, LED, baking equipment,For medium-sized doors such as container vehicles.

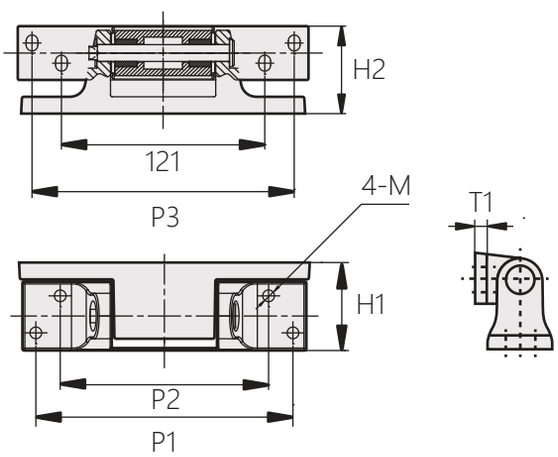

商品型號	P1	P2	P3	H1	H2	T1	M
OH-1727-1	204	146	169	50	62	9	8.5
OH-1727-2	153	124	156	52.3	52	10	6.5

快拆式合頁

Removable Lift Off Hinge

OH-207



商品介紹:

- ■門可快速且輕鬆地卸下，安裝簡單易明，節省成本
- ■材質:鋅合金
- ■表面處理:黑色塗裝、鍍鉻
- ■用途:電子設備外殼、工業機箱、工業設備、展品標誌

Product description:

- ■Quick, easy door removal
  Cost effective with simple, intuitive installation
- ■Material: Zinc Alloy
- ■Surface treatment: Black Powder Coated ; Electroplated With Chrome.
- ■Uses: Electronics Enclosures, Industrial Equipment, Industrial Machinery, Exhibit/Signs

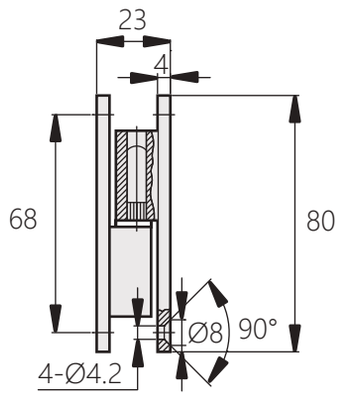

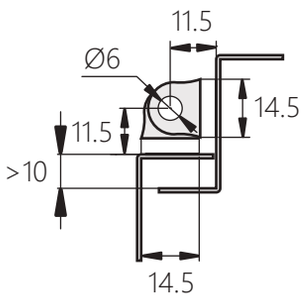

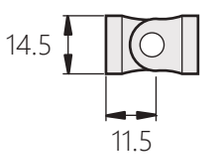

商品型號	表面處理
OH-207-1	黑色塗裝
OH-207-2	鍍鉻

轉角接合合頁

OH-2719

Corner joint hinge

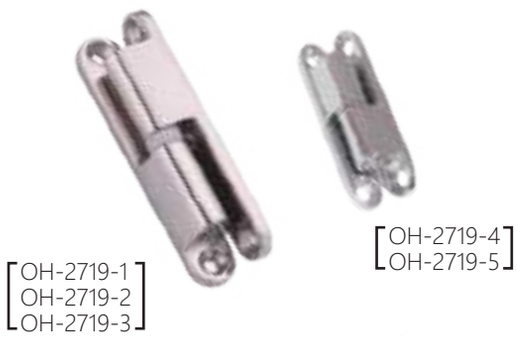

商品介紹:
- 材質:不鏽鋼脫蠟鑄造、鋅合金
- 表面處理:鏡面拋光
- 用途:冷藏冷凍庫、一般箱體等大型箱門用

Product description:
- Material: Stainless steel dewaxing casting, zinc alloy
- Surface treatment: Mirror polishing
- Uses: Large refrigerator doors, general cabinets, etc.

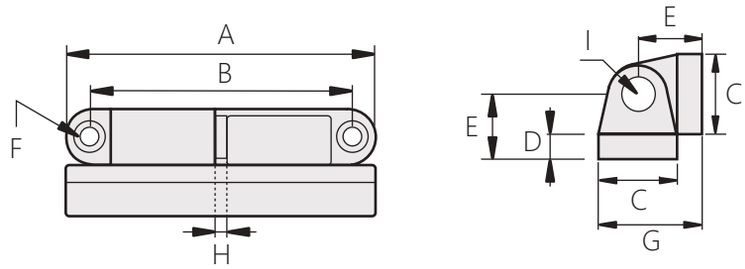

商品型號	材質	A	B	C	D	E	F	G	H	I
OH-2719-1	不鏽鋼	80	68	14.5	4.5	11.75	M4			
OH-2719-2	不鏽鋼	60	48	13	3	9.5	M4			
OH-2719-3	不鏽鋼	51	40	11	2.5	8	M3			
OH-2719-4	鋅合金	80	68	14	4		2-Ø4.2	19	2	R5
OH-2719-5	鋅合金	60	48	13	3		2-Ø4.2	15	2	R5

轉角接合合頁

OH-2715

Corner joint hinge



商品介紹:
- 材質:不鏽鋼脫蠟鑄造、鋅合金
- 表面處理:鏡面拋光
- 用途:冷藏冷凍庫、一般箱體等大型箱門用

Product description:
- Material: Stainless steel dewaxing casting, zinc alloy
- Surface treatment: Mirror polishing
- Uses: Large refrigerator doors, general cabinets, etc.

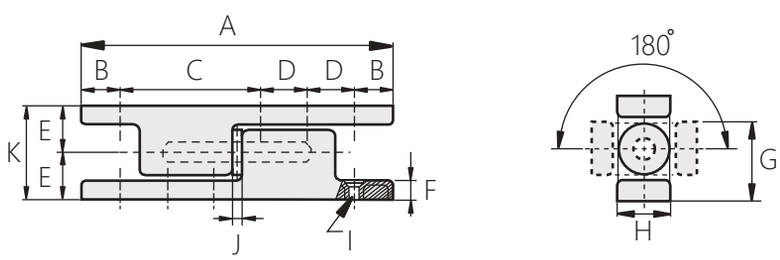

商品型號	材質	A	B	C	D	E	F	G	H	I	J	K
OH-2715-1	不鏽鋼	200	25	90	30	30	12	45	30	8-M6		
OH-2715-2	不鏽鋼	150	15	70	25	24.5	10	37	25	8-M6		
OH-2715-3	不鏽鋼	125	15	65	30	25	10.5	37.5	25	6-M6		
OH-2715-4	不鏽鋼	100	12.5	50	25	24.5	10	37	25	6-M6		
OH-2715-5	鋅合金	125	15	65	30	25	10		25	3Ø-6.5	4	50
OH-2715-6	鋅合金	150	15	70	25	24.5	10		25	4Ø-6.5	4	49

外露式鉸鏈

OH-231

Exposed hinge



商品介紹:

- 全開式，最大開啟角度大於270度
- 開啟時可以將門完全翻轉至側面
- 材質:不鏽鋼(SUS304)
- 表面處理:鏡面拋光
- 用途:動車餐車、烤箱、網路機櫃

Product description:

- Low profile with over 270 degree opening angle and opening fully.
- Door can be flipped to the side completely when installing.
- Material: Stainless steel (SUS304)
- Surface treatment: Mirror polishing
- Uses: Power dining car, oven, network cabinet.

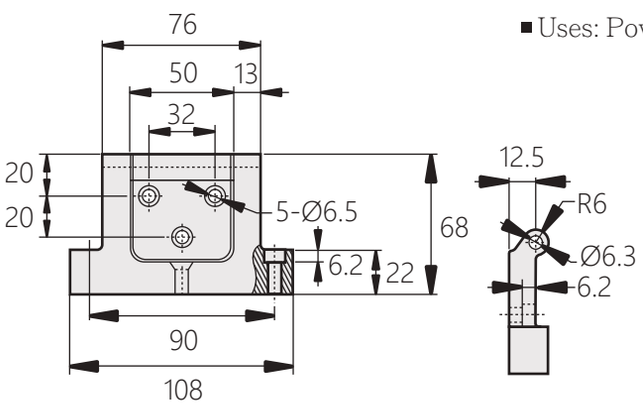

安裝示意圖

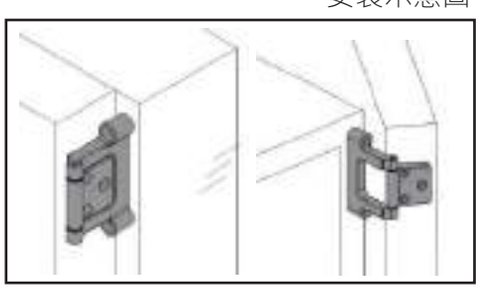

外露式鉸鏈

OH-234

Exposed hinge



商品介紹:

- 左右兼用
- 最大展開角度大於108度
- 適合冷庫凸門安裝
- 材質:不鏽鋼(SUS304)、鋅合金(ZDC)
- 表面處理:鏡面拋光或鍍亮鉻
- 用途:冷凍冷藏庫、廚房設備、工業烤箱

Product description:

- Suitable for left and right hinging
- Low profile with 180 degree opening angle
- Suitable for installation cam refrigerator door
- Material: Stainless steel (SUS304)、Zinc Alloy (ZDC)
- Surface treatment: Bright polishing, bright chrome plated
- Uses: Freezer, kitchen equipment, industrial oven.

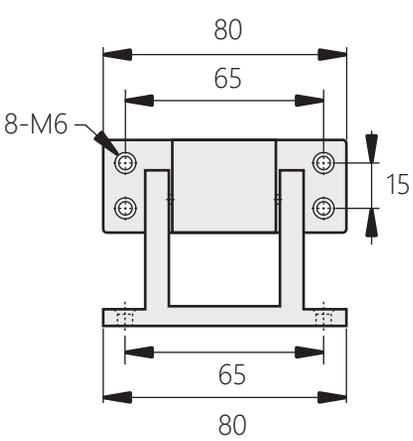

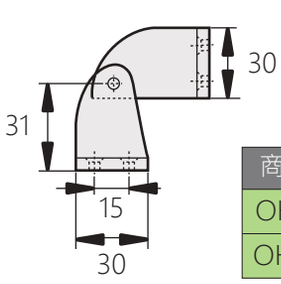

商品型號	材質
OH-234-1	不鏽鋼
OH-234-2	鋅合金

安裝示意圖

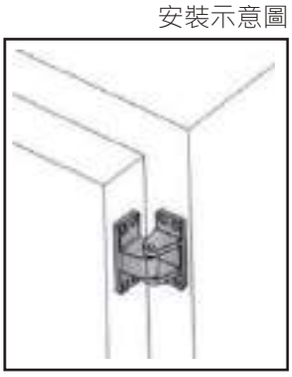

外露式合頁

Exposed Hinge

OH-225

ZDC 鋅 CAD



商品介紹:

- 安裝簡單易明，節省成本
  備多種樣式，適用於不同的應用需求
- 材質:鋅合金
- 表面處理:黑色塗裝
- 用途:電子設備外殼、工業機箱、工業設備

Product description:

- Cost effective with simple, intuitive installation
- Material: Zinc Alloy
- Surface treatment: Black Powder Coated
- Uses: Electronics enclosures, industrial equipment, industrial machinery.

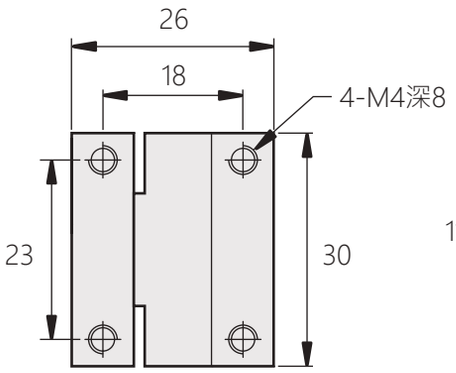

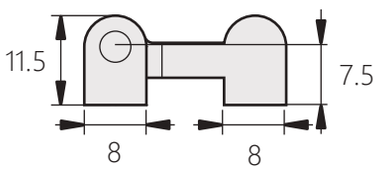

安裝示意圖

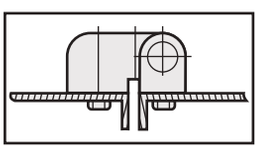

大型合頁

Butt Hinge

OH-2720

RoHS SUS 不鏽鋼 CAD



商品介紹:

- 材質:不鏽鋼304脫臘鑄造
- 表面處理:髮絲紋拋光
- 用途:冷藏冷凍庫、大型箱門用

Product description:

- Material: Stainless steel 304
- Surface treatment: Brushed polishing
- Uses: Refrigerated freezer, large box door.

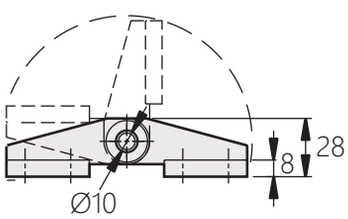

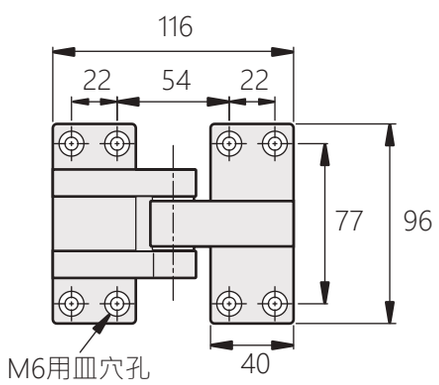

外露式合頁

Liff-off Offset Hinge

OH-229

ZDC 鋅 CAD



商品介紹:

- 大小邊設計，適合平門和門板整體凸出的門
- 材質:鋅合金
- 表面處理:黑色塗裝、亞光鉻
- 備註:安裝時螺絲從板內安裝
- 用途:機箱機櫃、網路機櫃、自動化設備

Product description:

- Large and small side design, suitable for the door of the flat door and the door panel
- Material: Zinc alloy
- Surface treatment: Black coating, matt chrome
- Uses: Chassis cabinets, network cabinets, automation equipment.
- Note: Screws are installed from the board during installation.

[OH-229-1
OH-229-2
OH-229-3
OH-229-4]

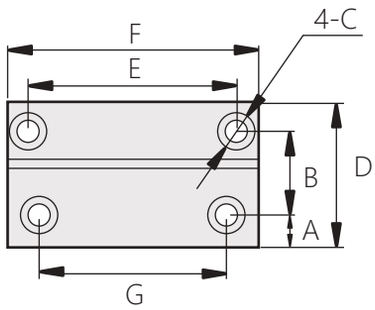

[OH-229-5
OH-229-6]

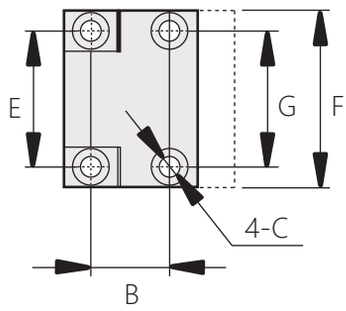

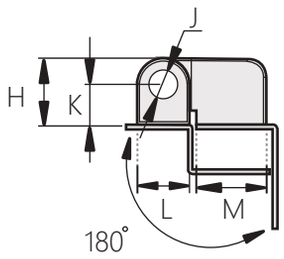

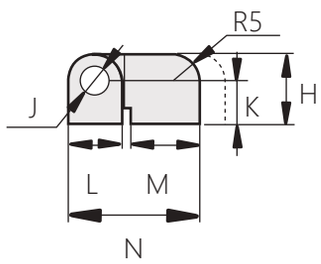

商品型號	顏色	A	B	C	D	E	F	G	H	J	K	L	M	N
OH-229-1	黑色	8	20	M5	35	50	60	45	18	8	11	14	18	
OH-229-2	亞光鉻													
OH-229-3	黑色	4	18.5	M4	27.5	22	30	22	13	5	8	10	14.5	
OH-229-4	亞光鉻													
OH-229-5	黑色		13			21		21					9	22
OH-229-6	黑色		18										15.5	28

外露式合頁

Liff-off Offset Hinge

OH-002

RoHS SUS不鏽鋼 ZDC鋅 CAD



商品介紹:

- 承重性良好，適用於凸門安裝
- 為了適應不同門厚，鉸鍊孔設計為長圓孔可調節
- 材質:鋅合金、不鏽鋼
- 表面處理:黑色噴砂或鍍亮鉻
- 用途:烤箱、恆溫恆濕箱、自動化設備

Product description:

- Good load bearing, suitable for convex door installation.
- In order to adapt to different door thicknesses, the hinge hole is designed to be adjustable for longround holes.
- Material: Zinc alloy, Stainless steel
- Surface treatment: Black sandblasting or bright chrome plating
- Uses: Oven, constant temperature and humidity box, automation equipment.

[OH-002W]
[OH-002B]

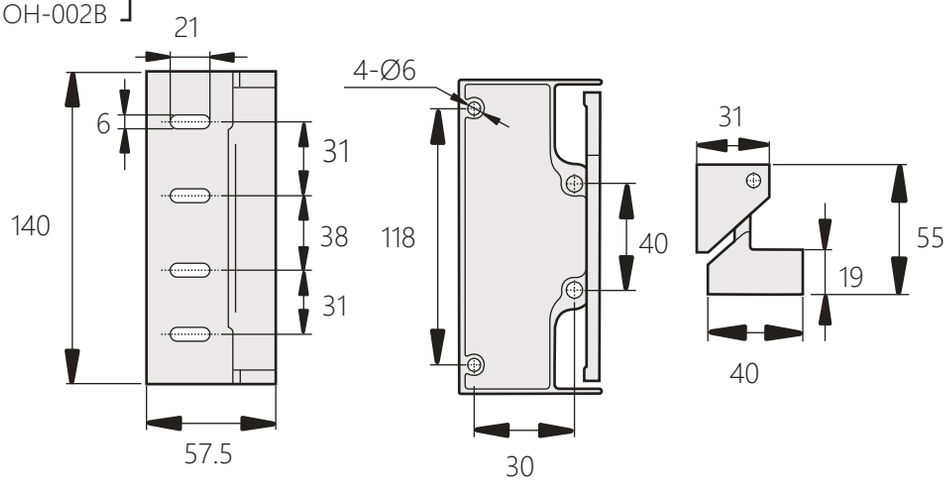

商品型號	材質
OH-002S	不鏽鋼
OH-002W	鋅合金
OH-002B	鋅合金

[OH-002S]



安裝示意圖

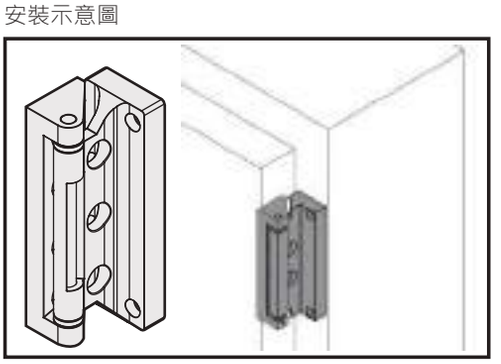

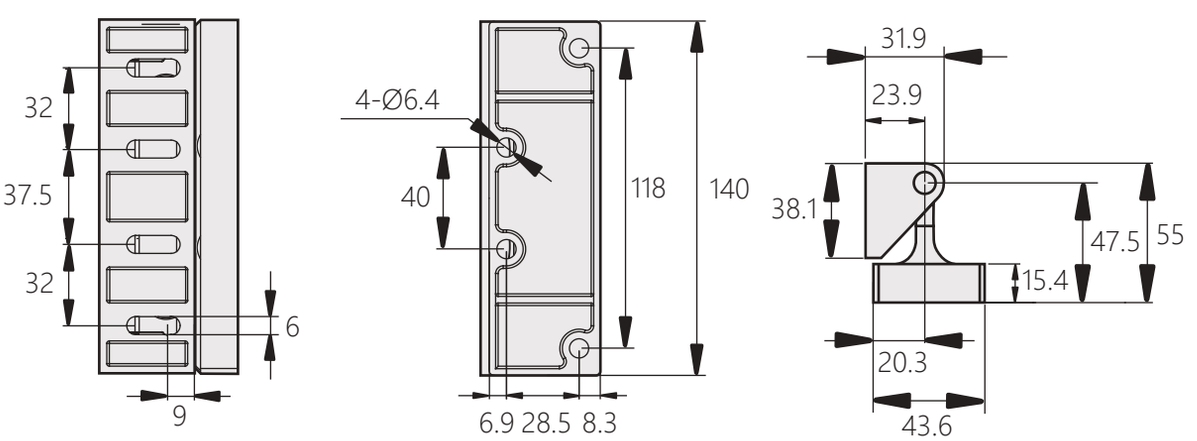

外露式合頁
Exposed Hinge

OH-230

ZDC 鋅 CAD



商品介紹:
- 安裝快捷方便，輕鬆開啟
- 左右開門兼用
- 表面處理:鍍亮鉻
- 材質:鋅合金
- 用途:機箱機櫃、電氣櫃、工業箱體等

Product description:
- Quick and easy to install, easy to open
- Open the door left and right
- Surface treatment: Bright chrome plating
- Material: Zinc alloy
- Uses: Chassis cabinets, electrical cabinets, industrial cabinets, etc.

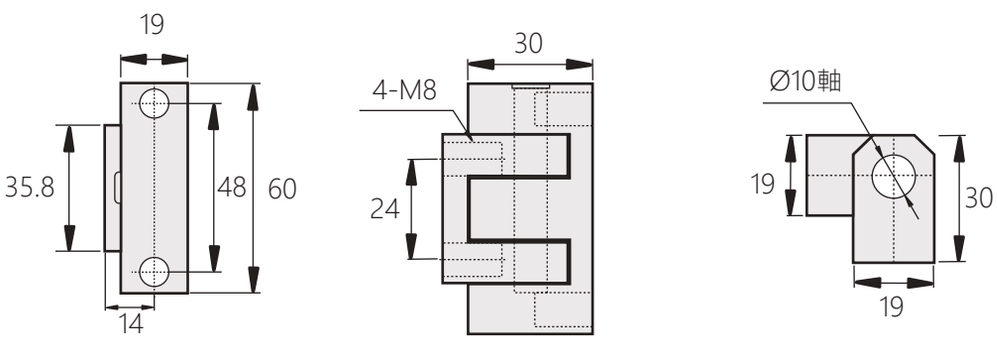

不鏽鋼彈簧小型合頁
Aluminum Pin Type Hinge

OH-250

CAD



商品介紹:
- 材質:本體- 鋁合金、插銷- 不鏽鋼
- 表面處理:陽極處理銀色
- 用途:電子設備外殼、工業機箱、工業設備、食品機械

Product description:
- Material: Body -Aluminum Pin-stainless steel
- Surface treatment: Anodize Finish Sliver
- Uses: Electronics Enclosures, Industrial Equipment, Industrial Machinery, Food Equipment.

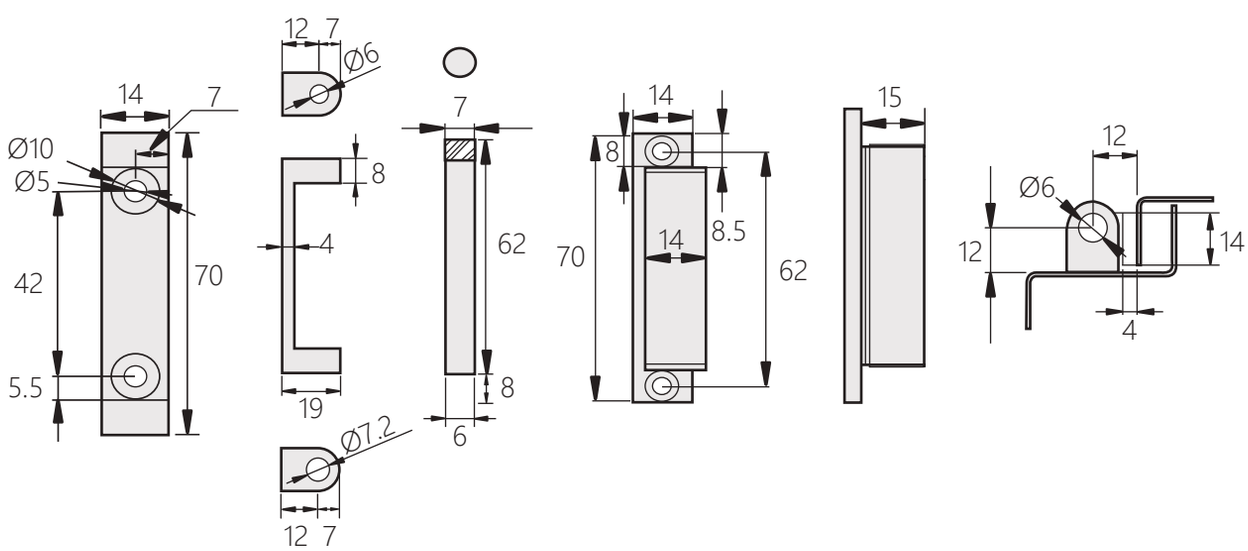

外露式合頁

Exposed Hinge

OH-213



商品介紹:
- 鉸鍊有三個螺柱，可兩兩相對轉動
- 材質:鋅合金
- 表面處理:鍍亮鉻
- 左右開門兼用
- 用途:自動化設備、機箱機櫃、網路機櫃

Product description:
- The hinge has three studs that can be rotated in pairs
- Material: Zinc alloy
- Surface treatment: Bright chrome plating
- Open the door left and right
- Uses: Automation equipment, chassis cabinets, network cabinets.

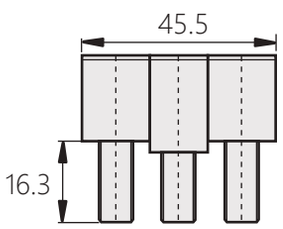

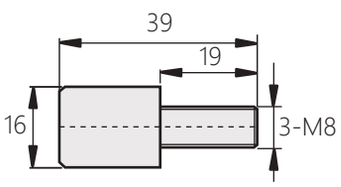

安裝示意圖

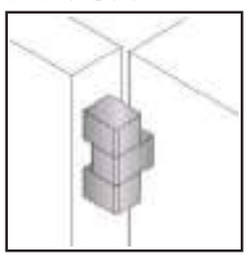

外露式合頁

Exposed Hinge

OH-228



商品介紹:
- 安裝時從螺絲板內安裝
- 材質:鋅合金
- 表面處理:無光黑或鍍亮鉻
- 用途:電箱、服務機器機櫃、小型機櫃

Product description:
- Installed from the screw plate during installation
- Material: Zinc alloy
- Surface treatment: Matt black or bright chrome
- Uses: Electric box, service machine cabinet, small cabinet.

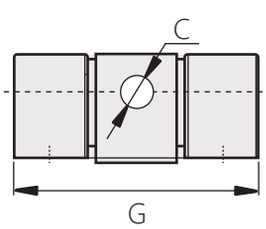

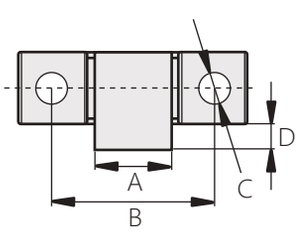

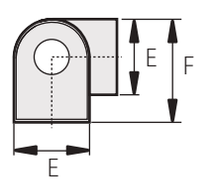

商品型號	表面處理	A	B	C	D	E	F	G
OH-228-1	無光黑	20	43	6	5	16	22	63
OH-228-2	無光黑	15	32			14	19	45
OH-228-3	鍍亮鉻	20	43			16	22	63
OH-228-4	鍍亮鉻	15	32			14	19	45

外露式合頁

Exposed Hinge

OH-211



商品介紹:

- 鉸鍊有三個螺柱，可兩兩相對轉動
- 材質:鋅合金
- 表面處理:鍍亮鉻
- 左右開門兼用
- 用途:自動化設備、機箱機櫃、網路機櫃

Product description:

- The hinge has three studs that can be rotated in pairs.
- Material: Zinc alloy
- Surface treatment: Bright chrome plating
- Open the door left and right
- Uses: Automation equipment, chassis cabinets, network cabinets.

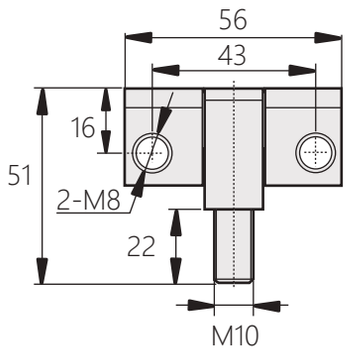

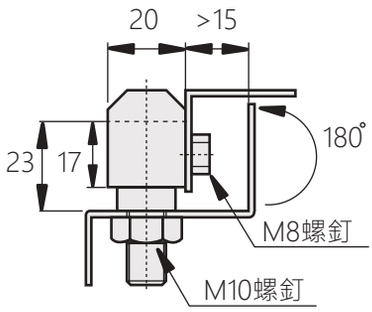

安裝示意圖

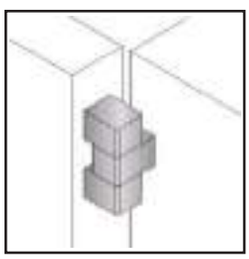

外露式合頁

Exposed Hinge

OH-212

商品介紹:

- 左右兼用型
- 表面處理:黑色烤漆或鍍亮鉻
- 用途:自動化設備、機箱機櫃、小型工業設備

Product description:

- Left and right
- Surface treatment: Black paint or bright chrome
- Uses: Automation equipment, chassis cabinets, small industrial equipment.



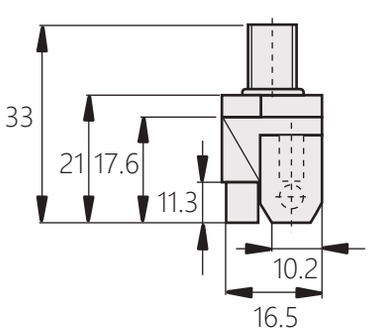

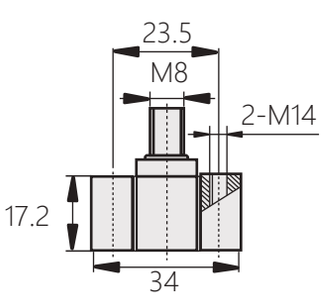

安裝示意圖

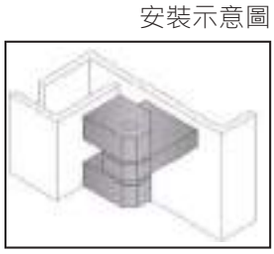

商品型號	顏色
OH-212-1	黑色
OH-212-2	鍍亮鉻

快拆式合頁

Quick release hinge

OH-204



商品介紹:

- 拆卸合頁，方便安裝
- 材質:鋅合金
- 表面處理:黑色烤漆或鍍亮鉻
- 用途:電箱、電櫃、小型機櫃

Product description:

- Disassemble the hinge for easy installation
- Material: Zinc alloy
- Surface treatment: Black paint or bright chrome
- Uses: Electric box, electric cabinet, small cabinet

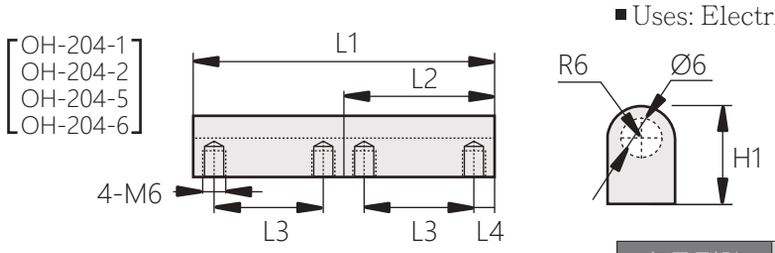

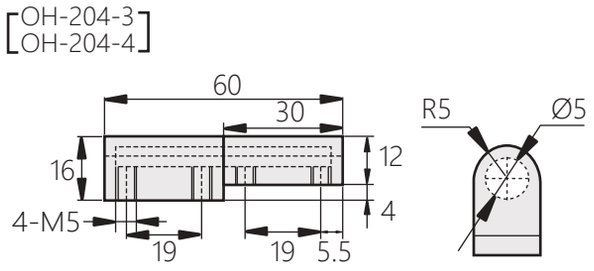

商品型號	顏色	L1	L2	L3	L4	H1
OH-204-1	黑色	80	40	29	5.5	16
OH-204-2	鍍亮鉻					
OH-204-3	黑色	60	30	19	5.5	16
OH-204-4	鍍亮鉻					
OH-204-5	黑色	50	25	13	6	16
OH-204-6	鍍亮鉻					

拆卸合頁

Datachable Hinge

OH-2022



OH-2022-1　　OH-2022-2

商品介紹:

- 內置半圓調節塊，可調節門的壓緊程度
- 可拆卸，左右開門兼用
- 材質:鋅合金、不鏽鋼
- 表面處理:黑色烤漆、拋光
- 用途:機箱機櫃、電氣櫃、工業箱體等

Product description:

- Built-in semi-circular adjustment block to adjust the tightness of the door.
- Removable, left and right to open the door
- Material: Zinc alloy, stainless steel
- Surface treatment: Black paint, polished
- Uses: Chassis cabinets, electrical cabinets, industrial cabinets, etc.

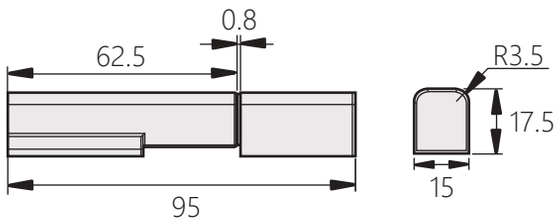

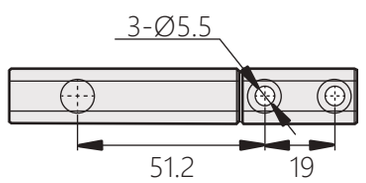

商品型號	材質
OH-2022-1	鋅合金
OH-2022-2	不鏽鋼

安裝示意圖

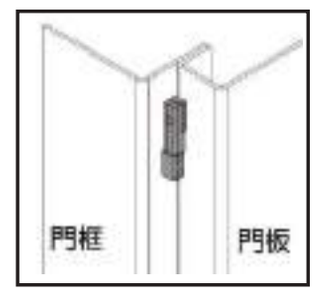

不鏽鋼快拆式合頁

Stainless Steel Lift-off Hinges

OH-205



商品介紹:

- 拆卸合頁，方便安裝
- 材質:不鏽鋼304
- 表面處理:鏡面拋光、拉絲拋光
- 用途:電箱、電櫃、小型機櫃

Product description:

- Disassemble the hinge for easy installation
- Material: Stainless steel
- Surface treatment: Mirror polishing, brush polishing
- Uses: Electric box, electric cabinet, small cabinet.

[OH-205-1]

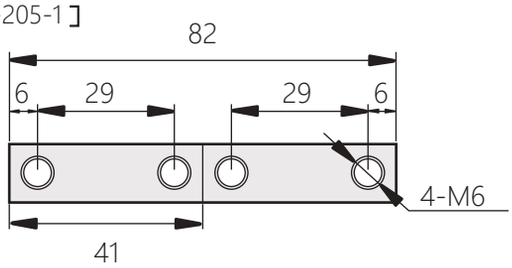

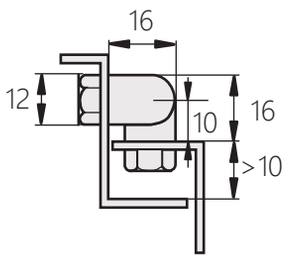

安裝示意圖

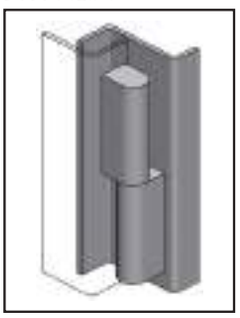

[OH-205-2]

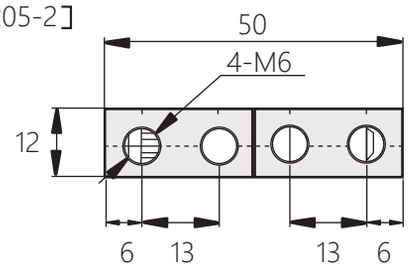

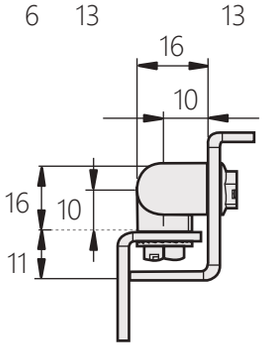

[OH-205-3]

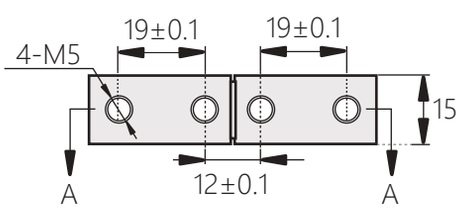

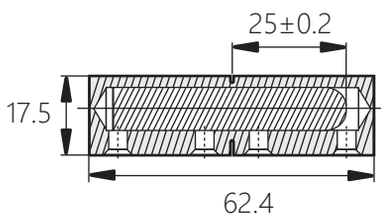

[剖面圖A-A]

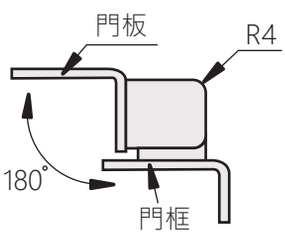

[OH-205-4]

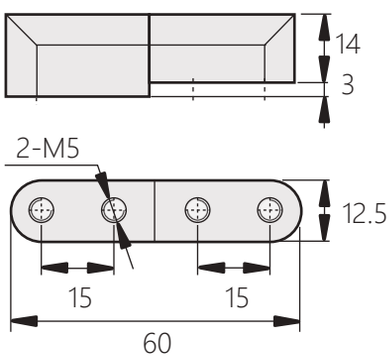

[OH-205-5]

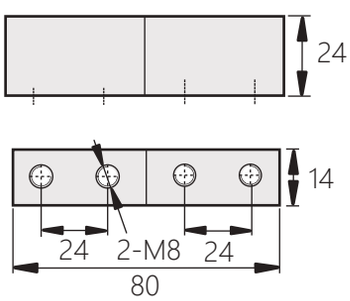

商品型號	表面處理
OH-205-1	鏡面拋光
OH-205-2	鏡面拋光
OH-205-3	拉絲拋光
OH-205-4	拉絲拋光
OH-205-5	拉絲拋光

快拆式合頁

Stainless steel butterfly hinge

OH-203

ZDC 鋅 CAD



商品介紹:

- ■屬插入式鉸鏈，雙鉸鏈有左開門，右開門之區分
- ■材質:鋅合金
- ■表面處理:黑色塗裝
- ■用途:食品製造、工業機箱、工業設備、機床、醫療設備

Product description:

- ■Inserted type.Double point hinges are available in right and left opening types.
- ■Material: Zinc alloy
- ■Surface treatment: Black coating
- ■Uses: Food manufacturing, industrial chassis, industrial equipment, machine tools, medical equipment.

[OH-203-1-L]
[OH-203-2-L]

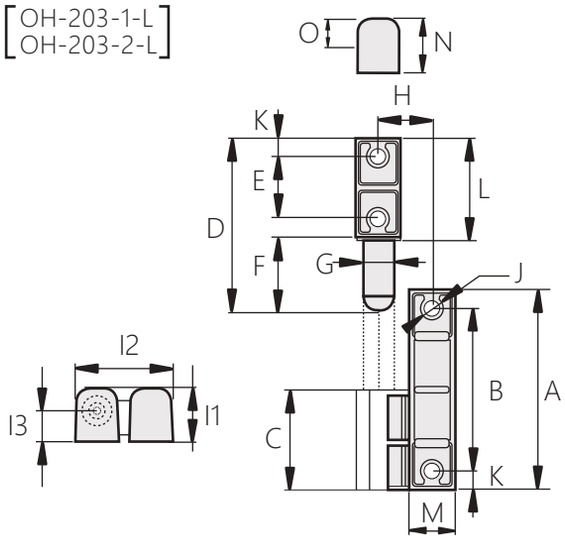

[OH-203-1-R]
[OH-203-2-R]

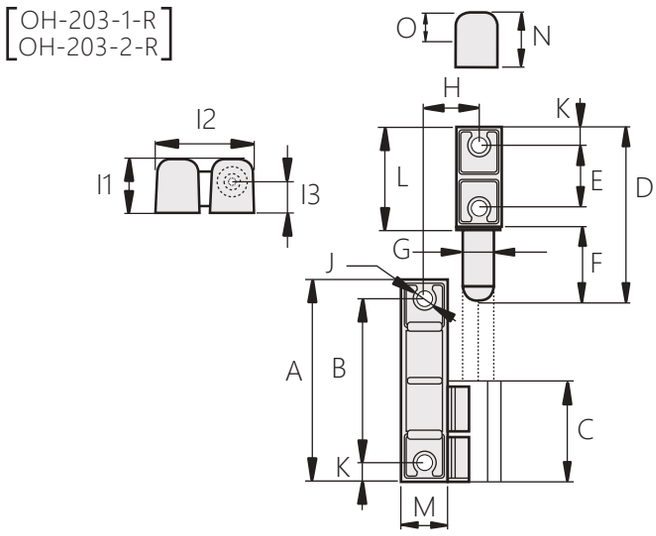

商品型號	A	B	C	D	E	F	G	H	I1	I2	I3	J	K	L	M	N	O
OH-203-1-L/R	63	50.8	31	54.7	19	23.8	9.5	17	17.2	31.5	10	4-M5					
OH-203-2-L/R	63.5	50.8	31.3		19		10.2	17.5	17.5	32.5	10	4-M5	6.2	31.3	15	17.5	10

[OH-203-3]

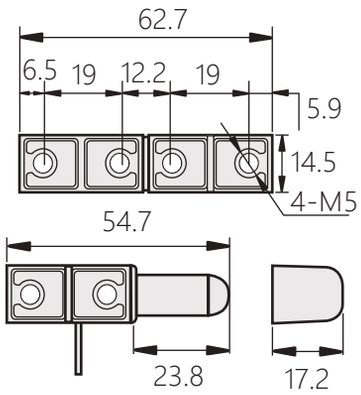

[OH-203-4]

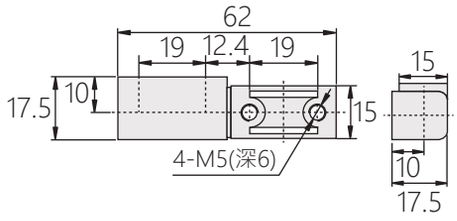

[OH-203-5]
[OH-203-6]

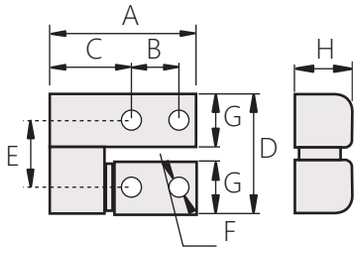

商品型號	A	B	C	D	E	F	G	H
OH-203-5-L	25	9	13	20.6	11.3	4-M4		10
OH-203-5-R	25	9	13	20.6	11.3	4-M4		10
OH-203-6-L	25.5	9	13	20.5	12.5	4-M4	9.4	10
OH-203-6-R	25.5	9	13	20.5	12.5	4-M4	9.4	10

冷凍合頁

OH-733

Refrigerator Hinge



商品介紹:

- 凸門結構設計，適合安裝於凸門的箱體
- 帶鉸鍊蓋，安裝後無安裝痕跡
- 左右開門兼用
- 材質:鋅合金
- 表面處理:鍍亮鉻
- 用途:冷凍冷藏庫、廚房設備、冷凍設備

Product description:

- Convex door structure design, suitable for mounting in the door of the convex door.
- With hinged cover, no mounting marks after installation.
- Open the door left and right
- Material: Zinc alloy
- Surface treatment: Bright chrome plating
- Uses: Freezer, kitchen equipment, refrigeration equipment.

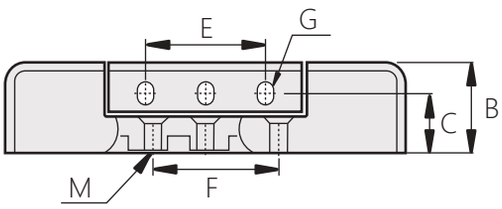

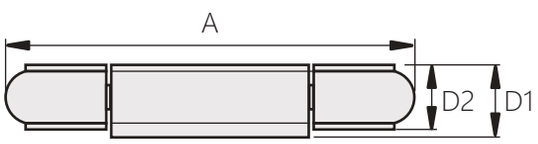

商品型號	A	B	C	D1	D2	E	F	G	M
OH-733-1	127	32	21	22	18	42	44	3-8×6螺孔	3-M6螺孔
OH-733-2	125	36	25						3-M5螺孔
OH-733-3	95	36	25						3-M6螺孔

冷凍合頁

OH-730

Refrigerator Hinge



商品介紹:

- 適合凸門安裝
- 左右兼用型
- 材質:鋅合金
- 表面處理:鍍亮鉻
- 用途:電箱、服務機器機櫃、小型機櫃

Product description:

- Suitable for convex door installation
- Left and right
- Material: Zinc alloy
- Surface treatment: Bright chrome plating
- Uses: Electric box, service machine cabinet, small cabinet.

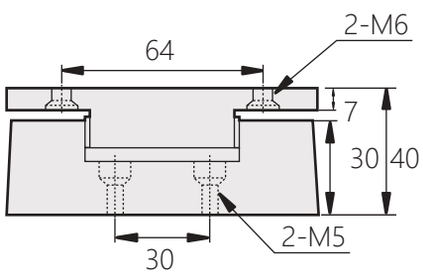

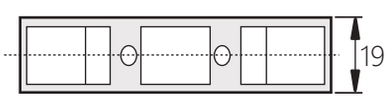

冷凍合頁

Refrigerator Hinge

OH-731

ZDC 鋅 CAD



商品介紹:

- 開門時可以提升的結構設計
- 軸可拆掉換方向安裝
- 安裝時請使用沉頭螺絲
- 材質:鋅合金
- 表面處理:鍍亮鉻
- 用途:冷凍冷藏庫、廚房設備、冷凍設備

Product description:

- Convex door structure design, suitable for mounting in the door of the convex door.
- The shaft can be removed and replaced
- Use countersunk screws when installing
- Material: Zinc alloy
- Surface treatment: Bright chrome plating
- Uses: Freezer, kitchen equipment, refrigeration equipment.

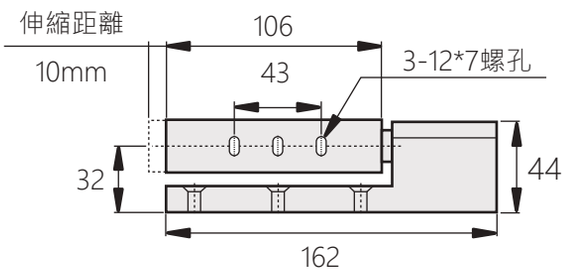

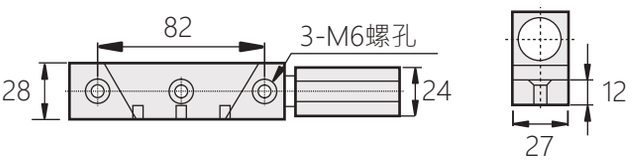

冷凍合頁

Refrigerator Hinge

OH-732

ZDC 鋅 CAD



商品介紹:

- 凸門結構設計，適合安裝於凸門的箱體
- 帶鉸鍊蓋，安裝後無安裝痕跡
- 左右開門兼用
- 材質:鋅合金
- 表面處理:鍍亮鉻
- 用途:冷凍冷藏庫、廚房設備、冷凍設備

Product description:

- Convex door structure design, suitable for mounting in the door of the convex door.
- With hinged cover, no mounting marks after installation
- Open the door left and right
- Material: Zinc alloy
- Surface treatment: Bright chrome plating
- Uses: Freezer, kitchen equipment, refrigeration equipment.

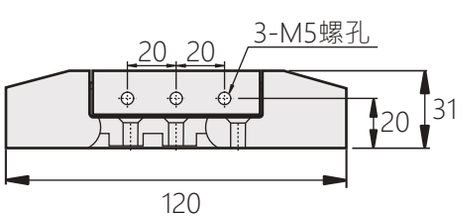

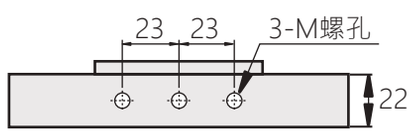

轉角型冷凍庫門合頁

OH-130

Corner type freezer door Hinge



商品介紹:
- ■材質:鋅合金
- ■表面處理:鍍鉻
- ■用途:廚房設備、醫療設備

Product description:
- ■Material: Zinc alloy
- ■Surface treatment: Chrome plating
- ■Uses: Kitchen equipment, medical equipment

[OH-130-1]

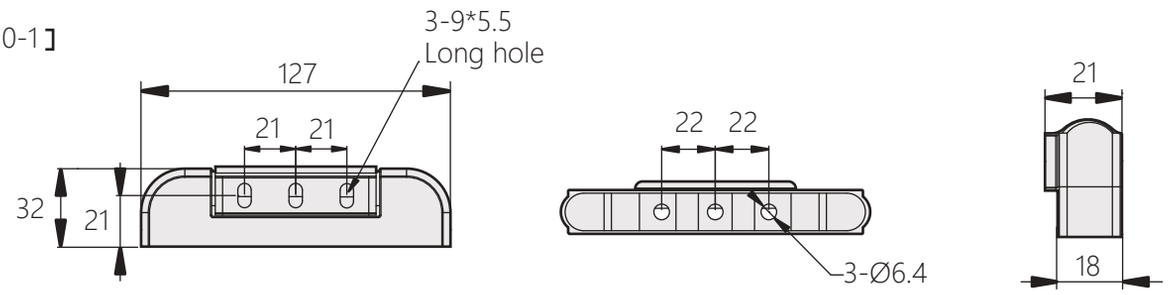

[OH-130-2]

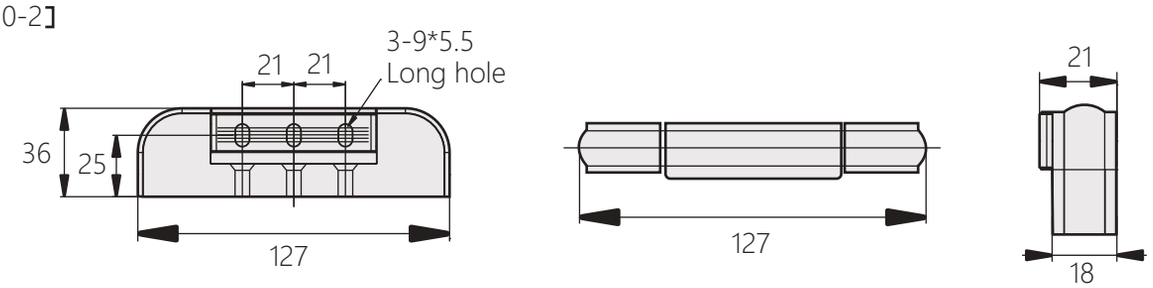

冷凍庫門鉸鏈

OH-712

Freezer Leaf Hinge



商品介紹:
- ■材質:鋅合金 (ZDC)
- ■表面處理:鍍鉻

Product description:
- ■Material: Zinc Alloy (ZDC)
- ■Surface treatment: Electroplated With Chrome

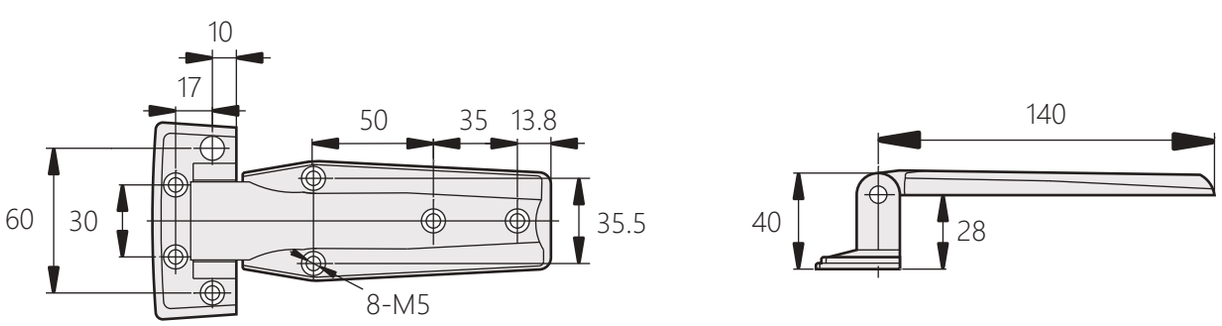

升降式鉸鏈

Lifting Hinge

OH-215



OH-215-L　　OH-215-R

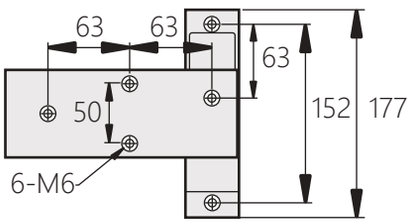

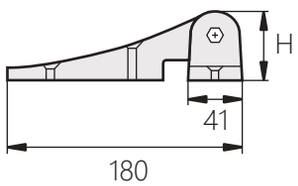

商品介紹:

- 門開啟的同時會被抬高
- 材質:鋅合金(ZDC)
- 表面處理:鍍亮鉻
- 用途:冰櫃、冷庫設備的門等
- 備註:商品有分左邊及右邊，下單時請留意型號

Product description:

- Door can beraised up when opening
- Material: Zinc Alloy (ZDC)
- Surface treatment: Bright chrome plating
- Uses: Freezers, cold storage equipment
- Note: The product has left and right sides. Please pay attention to the model when ordering.

商品型號		備註	高度H
左邊	右邊		
OH-215-1-1L	OH-215-1-1R	不帶彈簧	50
OH-215-1-2L	OH-215-1-2R		65
OH-215-2-1L	OH-215-2-1R	帶彈簧	50
OH-215-2-2L	OH-215-2-2R		65

冷凍庫鉸鏈

Refrigerator Hinge

OH-0210



商品介紹:

- 軸可以拆卸安裝
- 六孔安裝，增加安裝的牢固性
- 魚鰭式限位設計，最大開啟角度90度
- 材質:鋅合金(ZDC)
- 表面處理:鍍亮鉻
- 用途:機箱機櫃、電氣櫃、工業箱體等
- 備註:安裝時使用M5沉頭螺絲

Product description:

- Shaft can be detachable installation
- Six holes installation, more solid
- Fin limit design, low profile with 90 degree
- Material: Zinc Alloy (ZDC)
- Surface treatment: Bright chrome plating
- Uses: Chassis cabinet, electrical cabinet, industrial cabinet.
- Note: Use M5 countersunk head screws when installing.

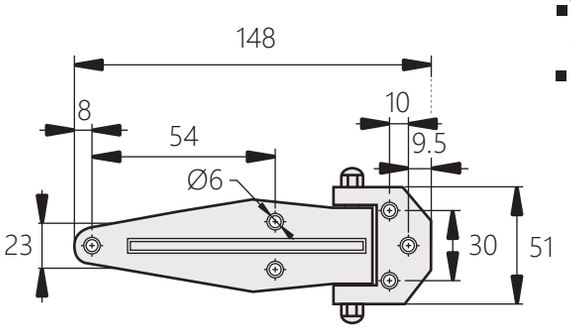

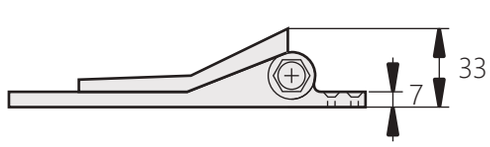

不鏽鋼重承載型鉸鏈

OH-14282

Heavy Duty Stainless Steel Hinge



商品介紹:

- 在嚴苛的環境中提供出色的耐久性以及抗腐蝕能力。配置墊圈，使鉸鏈無間隙，可防止裝上門板後因負載重量而產生的傾斜，適用於較重型的門板。
- 材質:不鏽鋼304 ; 墊圈:PA66
- 表面處理:鏡面拋光
- 用途:貨櫃中大型門扇、工業工程五金用

Product description:

- Provides superior durability and corrosion-resistance in demanding environments.
  Dispose PA66 washer, no tolerance on this hinge, can prevent door slope after install.
- Material: Stainless steel (SUS304); steel washer: PA66
- Surface treatment: Mirror polishing
- Uses: Large door leaf in container, industrial engineering hardware.

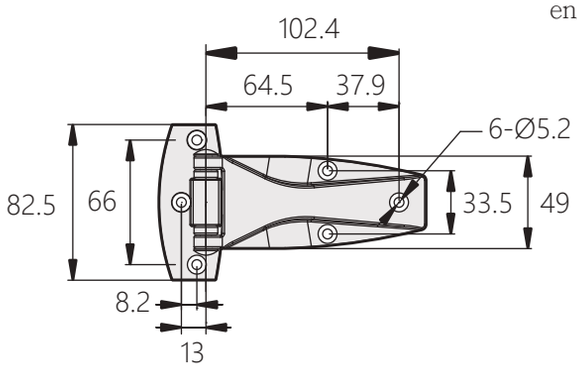

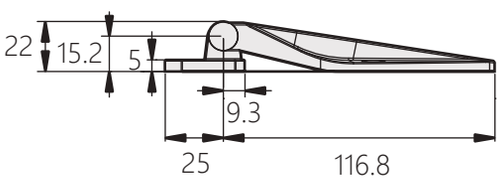

大型合頁

OH-2065

Large Hinge



商品介紹:

- 材質:不鏽鋼 304脫臘鑄造
- 表面處理:鏡面拋光
- 用途:貨櫃中大型門扇、工業工程五金用

Product description:

- Material: Stainless steel 304 plate stamping
- Surface treatment: Mirror polishing
- Uses: Large door leaf in container, industrial engineering hardware.

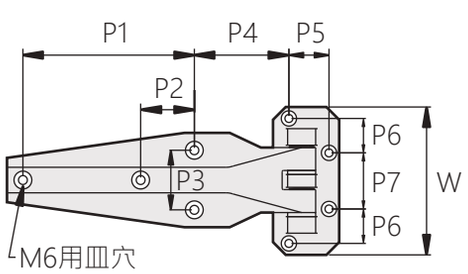

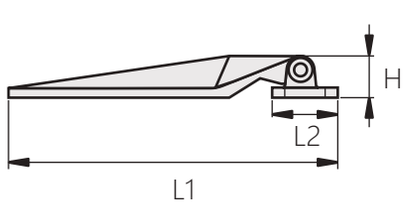

商品型號	L1	L2	W	H	P1	P2	P3	P4	P5	P6	P7
OH-2065-1	193.5	42	116	33	92.5		43	62.5	21.5	33.5	33
OH-2065-2	261	52			134.7	42.2	46.75	74.3	31.5	27	34

不鏽鋼鉸鏈

OH-0215

Refrigerator Hinge



商品介紹:

- 左右兼用型
- 90度限位設計，最大開啟角度90度
- 大小邊設計，符合門板與門框的性能要求
- 材質:不鏽鋼(SUS201)
- 表面處理:拉絲拋光
- 用途:蒸汽櫃、廚櫃、工業烤箱等

Product description:

- Suitable for left and right hinging
- 90 degree limit design, low profile with 90 degree opening angle.
- Large and small edge design, meeting the performance requirements of door panels and door frames
- Material: Stainless steel (SUS201)
- Surface treatment: Brushed polishing
- Uses: Steam cabinets, kitchen cabinets, industrial ovens, etc.

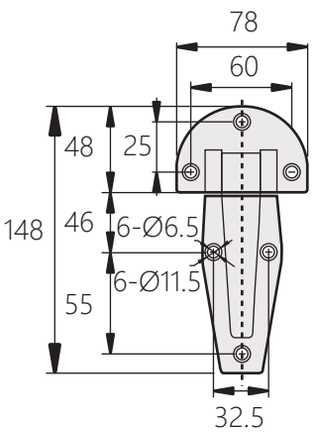

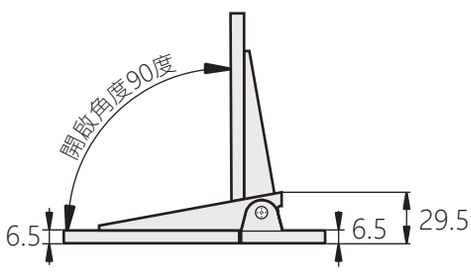

不鏽鋼平面鉸鏈

OH-331

Stainless steel flat Hinge



商品介紹:

- 全不鏽鋼材質八孔安裝，更加牢固
- 最大開啟角度180度
- 材質:不鏽鋼(SUS304)
- 表面處理:震動研磨
- 用途:機箱機櫃、網絡機櫃、自動化設備等

Product description:

- Pure stainless steel with eight-hole installation, more solid.
- Low profile with 180 degree opening angle
- Material: Stainless steel (SUS304)
- Surface treatment: Vibration grinding
- Uses: Chassis cabinets, network cabinets, automation equipment, etc.

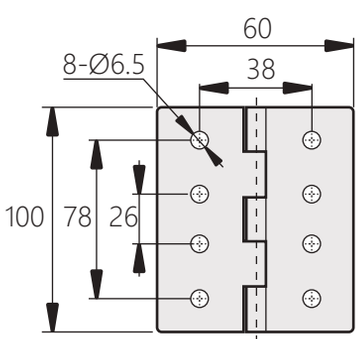

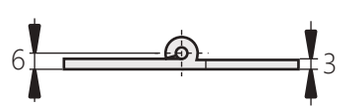

不鏽鋼鉸鏈 OH-0216

Stainless steel hinge



商品介紹:

- 左右兼用型
- 最大開啟角度180度
- 大小邊設計，符合門板與門框的性能要求
- 材質:不鏽鋼(SUS201)
- 表面處理:拉絲拋光
- 用途:蒸汽櫃、廚櫃、工業烤箱等

Product description:

- Suitable for left and right hinging
- Low profile with 180 degree opening angle
- Large and small side design, suitable for the requirements of door panel and door frame
- Material: Stainless steel (SUS304)
- Surface treatment: Brushed polishing
- Uses: Steam cabinet, kitchen cabinet, industrial oven.

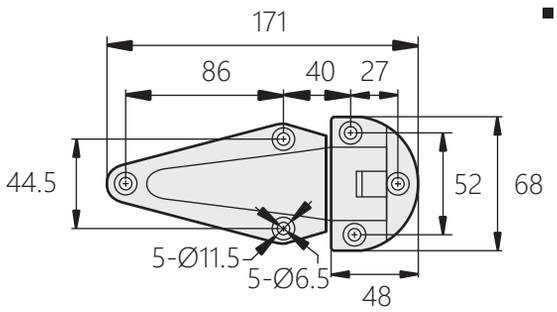

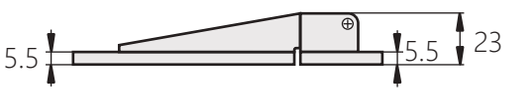

不鏽鋼鉸鏈 OH-217

Stainless Steel Hinge



商品介紹:

- 左右兼用型
- 長方形設計，適合高度位較窄的門
- 材質:不鏽鋼(SUS304)
- 表面處理:鏡面拋光
- 用途:機床、自動化設備、工業箱機等

Product description:

- Suitable for left and right hinging
- Rectangular design, suitable for height position of narrow door
- Material: Stainless steel (SUS304)
- Surface treatment: Mirror polishing
- Uses: Machine tool, automation equipment, industrial cabinet.

[OH-217-1]

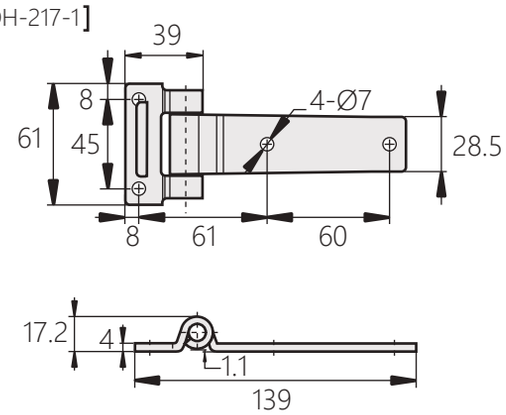

[OH-217-2]

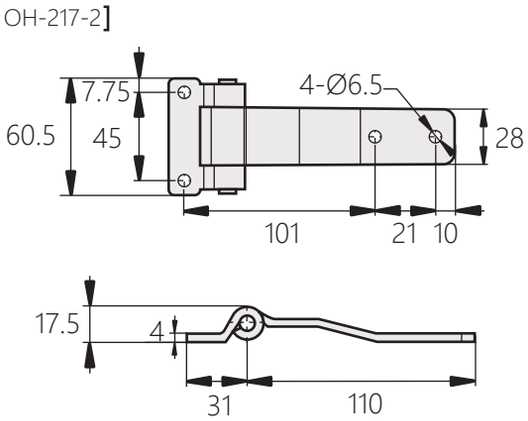

不鏽鋼鉸鏈

OH-0213

Stainless steel hinge



商品介紹:
- 左右兼用型
- 最大開啟角度135度
- 大小邊設計，符合門板與門框的性能要求
- 材質:不鏽鋼(SUS201)
- 表面處理:拉絲拋光
- 用途:蒸汽櫃、廚櫃、工業烤箱等

Product description:
- Suitable for left and right hinging
- Low profile with 135 degree opening angle
- Large and small side design, suitable for the requirements of door panel and door frame.
- Material: Stainless steel (SUS201)
- Surface treatment: Wiredrawing polishing
- Uses: Steam cabinet, kitchen cabinet, industrial oven.

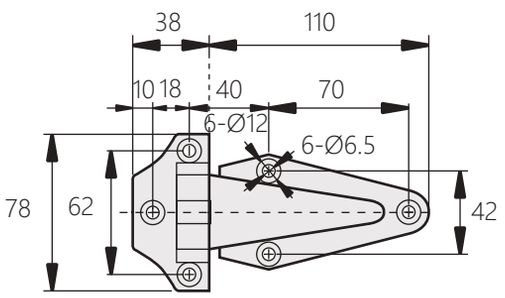

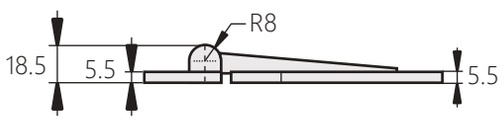

不鏽鋼鉸鏈

OH-0214

Stainles steel hinge



商品介紹:
- 左右兼用型
- 最大開啟角度180度
- 全不鏽鋼實心鑄造，承重性強
- 材質:不鏽鋼（SUS304）
- 表面處理:鏡面拋光
- 用途:重型設備、烤箱、試驗箱

Product description:
- Left and right
- Low profile with 180 degree opening angle
- Pure stainless steel solid casting, strong load bearing performance
- Material: Stainless steel (SUS304)
- Surface treatment: Mirror polishing
- Uses: Heavy equipment, oven, test chamber.

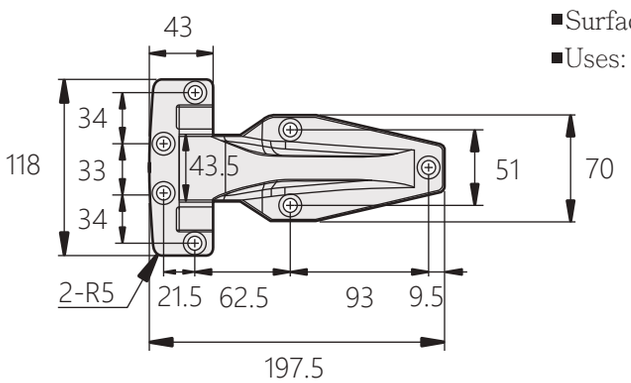

安裝示意圖

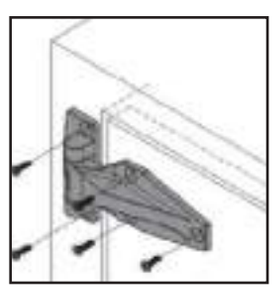

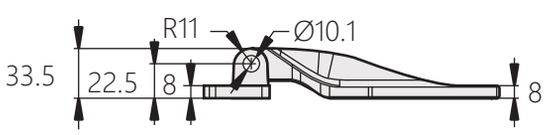

隱藏式鉸鏈 OH-0218

Hidden hinge



[OH-0218-1] [OH-0218-2]

商品介紹:

- ■最大開啟角度180度
- ■材質:鋅合金（ZDC）
- ■表面處理:鍍亮鉻
- ■用途:建築冷藏庫、廚房設備、冷庫設備
- ■備註:安裝時請使用沉頭螺絲

Product description:

- ■Maximum opening angle of 180 degrees
- ■Material: Zinc alloy (ZDC)
- ■Surface treatment: Bright chrome plating
- ■Uses: Building refrigerators, kitchen equipment, cold storage equipment
- ■Note: Please use countersunk screws when installing

[OH-0218-1]

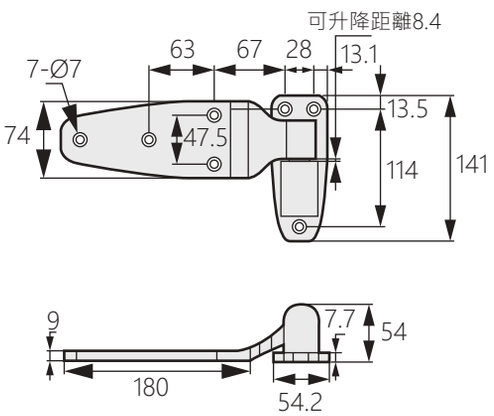

[OH-0218-2]

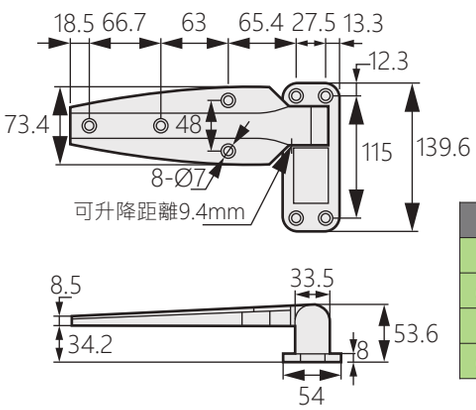

商品型號	方向
OH-0218-1L	左開
OH-0218-1R	右開
OH-0218-2L	左開
OH-0218-2R	右開

自動回位鉸鏈 OH-0219

Automatic return hinge



商品介紹:

- ■最大開啟角度180度
- ■材質:鋅合金（ZDC）
- ■表面處理:鍍亮鉻
- ■用途:建築冷藏庫、廚房設備、冷庫設備
- ■備註:安裝時請使用沉頭螺絲

Product description:

- ■Maximum opening angle of 180 degrees
- ■Material: Zinc alloy (ZDC)
- ■Surface treatment: Bright chrome plating
- ■Uses: Building refrigerators, kitchen equipment, cold storage equipment
- ■Note: Please use countersunk screws when installing

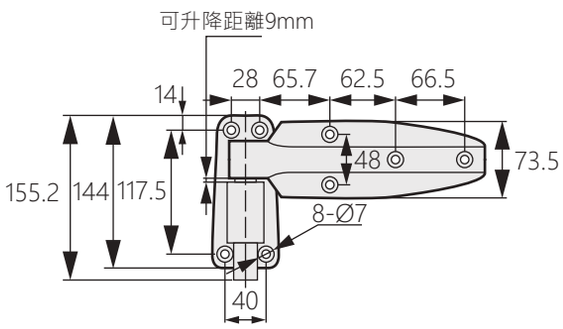

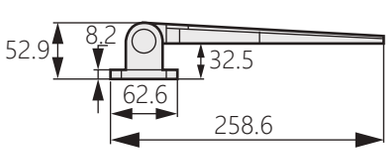

商品型號	方向
OH-0219L	左開
OH-0219R	右開

不鏽鋼內鉸鏈

OH-3019

Stainless steel concealed hinge



商品介紹:

- 材質:不鏽鋼304、316
- 表面處理:鏡光、拉絲
- 用途:不鏽鋼機櫃內門，旋轉角度0-90°

Product description:

- Material: Stainless steel 304. 316
- Surface treatment: Mirror polishing, drawbench
- Uses: Internal door of equipment cabinet. Angle of rotation is 0-90° .

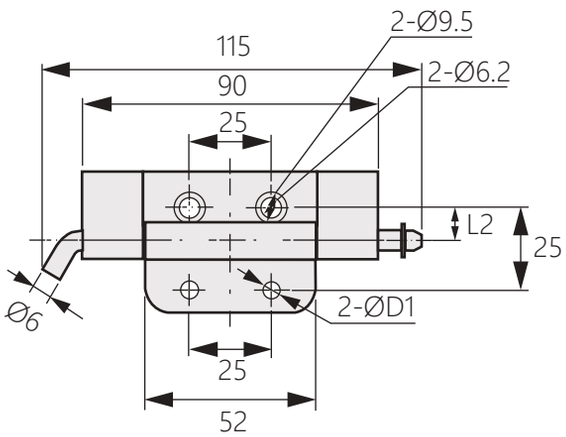

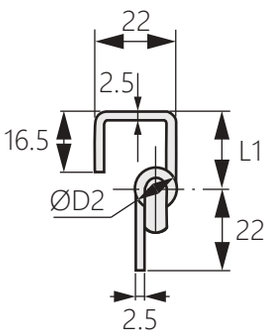

商品型號	D1	D2	L1	L2	備註
OH-3019-1	5.5	11	21	10	
OH-3019-2	5.5	11	21	10	軸緊配
OH-3019-3	5.5	12	21	10	
OH-3019-4	5.2*8	11	22	11	

冷凍庫可調式門鉸鍊

OH-1460

Freezer adjustable door hinge



商品介紹:

- 材質:不鏽鋼304、鋅合金
- 用途:冷凍冷藏庫、廚房設備、冷庫設備

Product description:

- Material: Stainless steel 304, zinc Alloy (ZDC)
- Uses: Cold storage freezer, kitchen equipment, cold storage equipment.

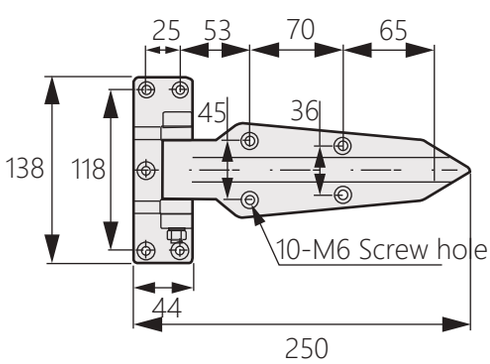



商品型號	材質	安裝高度
OH-1460-1-1	不鏽鋼	32-50
OH-1460-1-2		32-60
OH-1460-1-3		32-70
OH-1460-2-1	鋅合金	32-50
OH-1460-2-2		32-60
OH-1460-2-3		32-70

冷凍庫鉸鏈

OH-0211

Refrigerator Hinge



商品介紹:

- 軸可以拆卸安裝
- 六孔安裝，增加安裝的牢固性
- 最大開啟角度90度
- 材質:鋅合金(ZDC)
- 表面處理:鍍亮鉻
- 用途:機箱機櫃、電氣櫃、工業箱體等

Product description:

- The shaft can be removed for installation
- Six-hole mounting for increased installation robustness
- Low profile with 90 degree opening angle
- Material: Zinc Alloy (ZDC)
- Surface treatment: Bright chrome plating
- Uses: Chassis cabinets, electrical cabinets, industrial cabinets, etc.

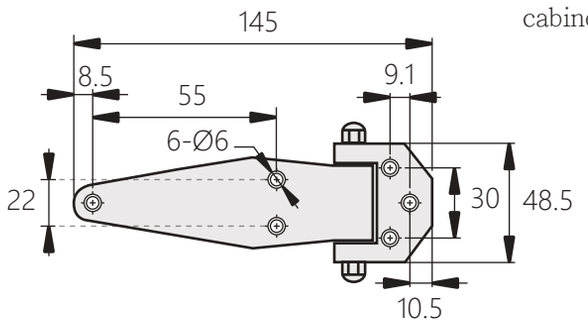

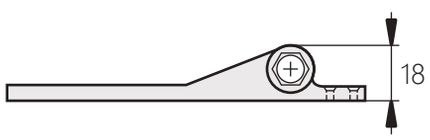

蓋型鉸鏈

OH-178

Lid hinge

商品介紹:

- 安裝螺絲被外罩遮蔽，不影響外觀
- 動作範圍為270°
- 材質:鉸鍊本體-鋅合金(ZDC),外罩-不鏽鋼(SUS304)
- 表面處理:鉸鍊本體-鍍珍珠鉻
- 用途:造型設計的各種框體

Product description:

- The mounting screws are shielded by the outer cover and do not affect the appearance.
- The range of motion is 270°
- Material: Hinge body-zinc alloy (ZDC), outer cover-stainless steel (SUS304)
- Surface treatment: Hinge body-pearl chrome plating
- Uses: Various frames of styling design



未加安裝蓋時

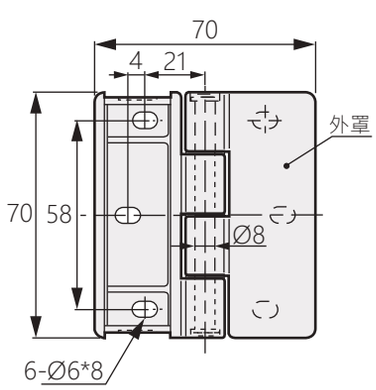

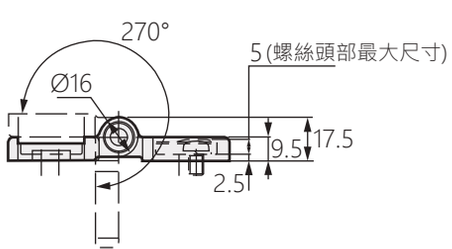

商品型號	L	W	(H)	P1	P2	P3	d
OH-178-1	100	90	6	7	24.5	77	Ø6.5*10
OH-178-2	60	90	5	14	21	42	Ø4.5*6
OH-178-3	80	70	5	4	21	58	Ø6*8

隱藏式鉸鏈

Concealed hinge

OH-055



商品介紹:
- 隱藏式安裝
- 左右兼用
- 材質:鋅合金(ZDC)
- 表面處理:納米噴塗
- 用途:機箱機櫃、網絡機櫃、電箱

Product description:
- Hidden installation
- Use both left and right
- Material: Zinc Alloy (ZDC)
- Surface treatment: Nano spray
- Uses: Chassis cabinet, network cabinet, electric box

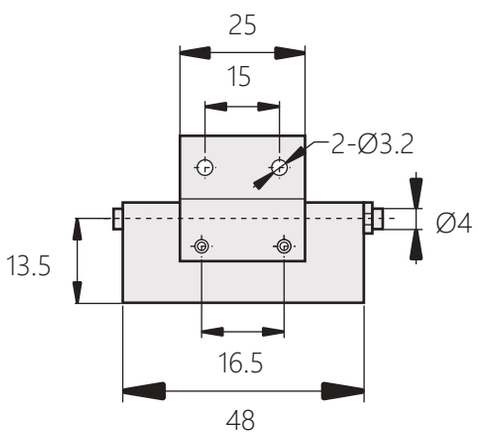

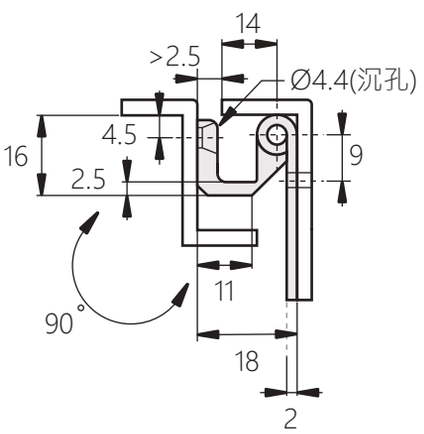

隱藏式鉸鏈

Concealed Hinge

OH-056



商品介紹:
- 隱藏式焊接安裝
- 最大開啟角度120度
- 材質:鋅合金(ZDC)
- 表面處理:鍍白鋅
- 用途:機箱機櫃、電氣櫃、工業箱體
- 備註:一端焊接安裝

Product description:
- Concealed welded installation
- Low profile with 120 degree opening angle
- Material: Zinc Alloy (ZDC)
- Surface treatment: White zinc plating
- Uses: Chassis cabinet, electrical cabinet,industrial cabinet.
- Note: One end can be welded to install.

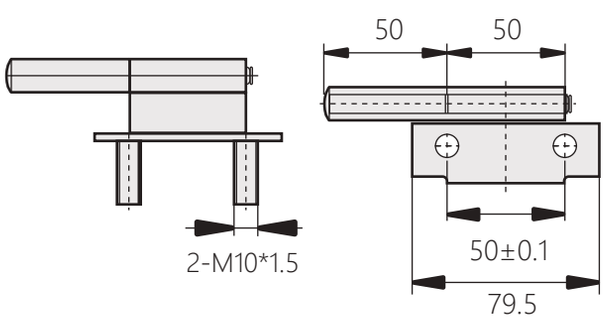

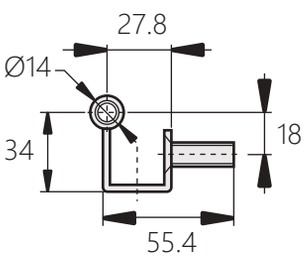

安裝示意圖

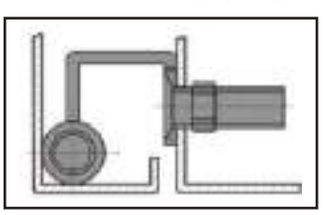

隱藏式鉸鏈
Concealed Hinge

OH-057



商品介紹:
- 左右兼用
- 隱藏式鉸鏈，從板內安裝
- 安裝時軸可以抽出，安裝完畢將軸打入固定
- 一端焊接式安裝
- 材質:冷軋鋼板(SPCC)
- 表面處理:鍍白鋅
- 用途:機箱機櫃、電氣櫃、工業箱體等

Product description:
- Suitable for left and right hinging
- Concealed hinge, installed from inside of the board
- Shaft can be with drawn, throw into and fix after installing.
- One end welded installation
- Material: Cold rolled steel (SPCC)
- Surface treatment: White zinc plating
- Uses: Chassis cabinets, electrical cabinets, industrial cabinets, etc.

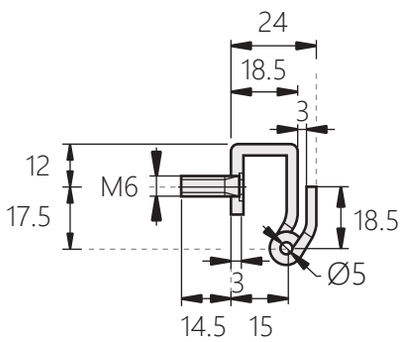

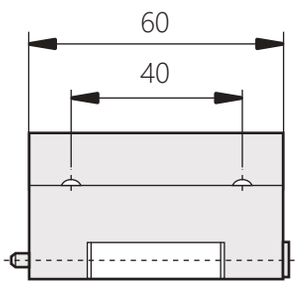

隱藏式鉸鏈
Concealed Hinge

OH-206



商品介紹:
- 最大開啟角度180度
- 調換軸的穿入方向可實現左右兼用
- 材質:不鏽鋼(SUS304)
- 表面處理:震動研磨
- 用途:機箱機櫃、自動化設備等

Product description:
- Low profile with 180 degree opening angle
- Exchange shaft throw detection suitable for left and right using.
- Material: Stainless steel (SUS304)
- Surface treatment: Vibration grinding
- Uses: Chassis cabinets, automation equipment, etc.

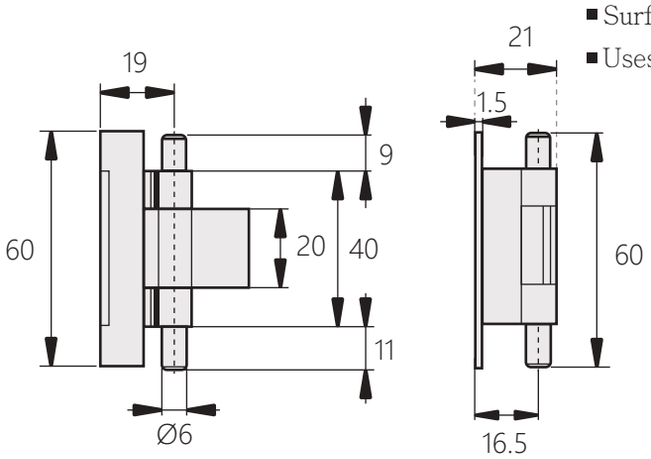

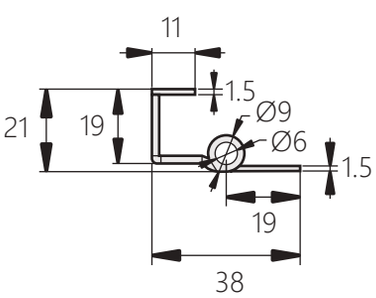

動靜鉸鏈

Dynamic and static hinge

OH-061



商品介紹:

- 左右開門兼用
- 最大開啟角度180度
- 材質:鋅合金(ZDC)
- 表面處理:亞光鉻
- 用途:機箱機櫃、電箱、電櫃

Product description:

- Suitable for left and right hinging
- Low profile with 180 degree opening angle
- Material: Zinc Alloy (ZDC)
- Surface treatment: Matt chrome
- Uses: Chassis cabinet, electric box, electric cabinet.

安裝示意圖

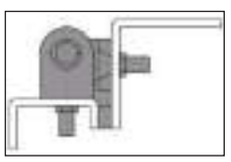

[OH-061-1]

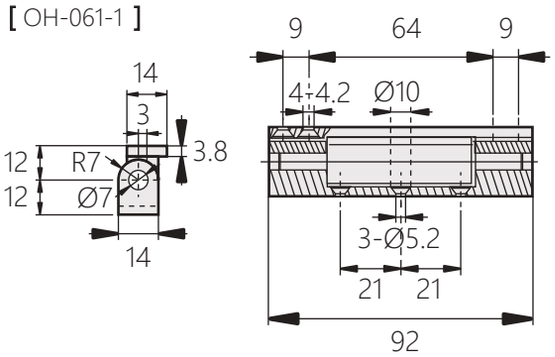

[OH-061-2]

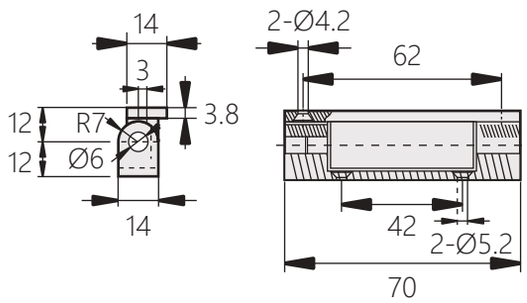

隱藏式鉸鏈

Concealed Hinge

OH-059



商品介紹:

- 左右開門兼用
- 隱藏式安裝
- 安裝時軸可以抽出，安裝完畢將軸插入
- 材質:冷軋鋼板(SPCC)
- 表面處理:鍍白鋅、鍍彩鋅
- 用途:機箱機櫃、電氣櫃、工業箱體等

Product description:

- Suitable for left and right hinging
- Hidden installation
- The shaft can be pulled out during installation and the shaft is inserted after installation.
- Material: Cold rolled steel plate (SPCC)
- Surface treatment: Vibration grinding
- Uses: Chassis cabinets, electrical cabinets, industrial cabinets, etc.

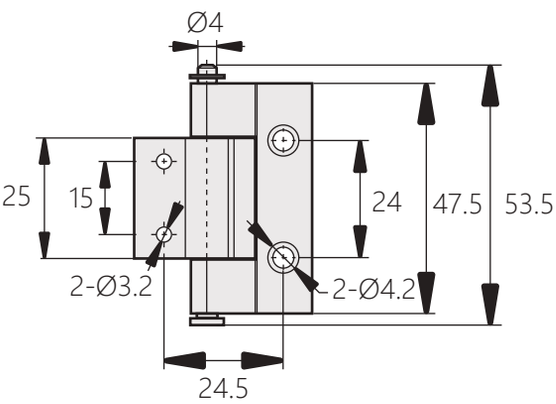

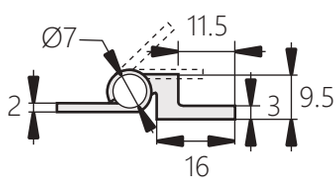

商品型號	表面處理
OH-059-1	鍍白鋅
OH-059-2	鍍彩鋅

隱藏式拆卸鉸鏈

Concealed removable hinge

OH-036



商品介紹:

- 左右兼用
- 可拆卸安裝
- 材質:不鏽鋼(SUS304)
- 表面處理:震動研磨
- 用途:機箱機櫃、網絡機櫃、自動化設備
- 備註:大小邊設計

Product description:

- Suitable for left and right hinging
- Detachable type with pure stainless steel
- Material: Stainless steel (SUS304)
- Surface treatment: Vibratuib Ground
- Uses: Chassis cabinet, network cabinet, automation equiment.
- Note: Large and small size design.

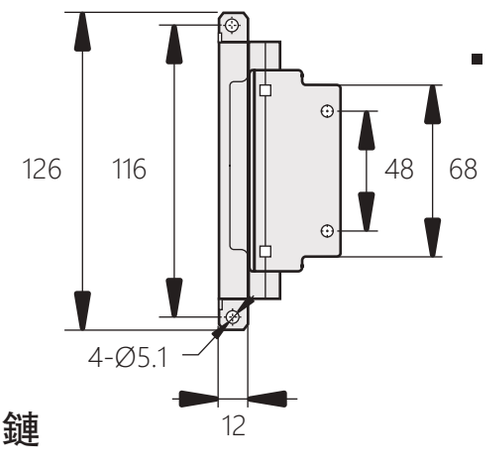

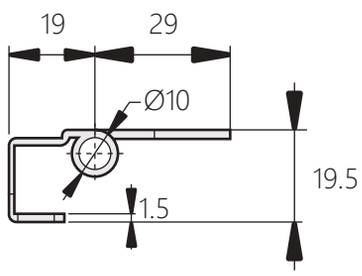

隱藏式鉸鏈

Concealed Hinge

OH-054



商品介紹:

- 左右開門兼用
- 隱藏式鉸鏈，從板內安裝
- 安裝時軸可以抽出，安裝完畢將軸插入用卡簧鎖緊
- 一端焊接式安裝
- 材質:冷軋鋼板(SPCC)
- 表面處理:鍍白鋅
- 用途:機箱機櫃、電氣櫃、工業箱體等

Product description:

- Suitable for Left and right hinge
- Concealed hinge, installed from inside of the board.
- Shaft can be with drawn when installing, insert shaft and latch with jump ring after finish installation.
- One end can be welded to install
- Material: Cold rolled steel (SPCC)
- Surface treatment: White zinc plating
- Uses: Chassis cabinets, electrical cabinets,industrial cabinets.

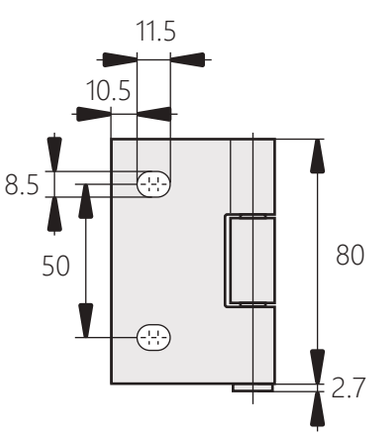

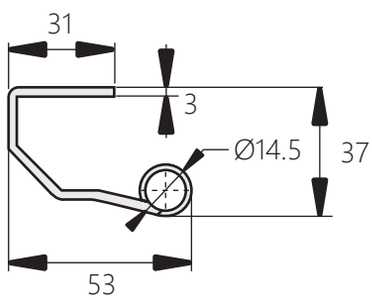

隱藏式拆卸鉸鏈 OH-037

Concealed removal hinge



商品介紹:
- 材質:鐵（SPCC）
- 表面處理:鍍白鋅
- 用途:機箱機櫃、網絡機櫃、自動化設備
- 備註:T形設計，承受性能更強

Product description:
- Material: Iron(SPCC)
- Surface treatment: White zinc plating
- Uses: Chassis cabinets, network cabinets, automation equipment.
- Note: T-shaped design, stronger bearing performance.

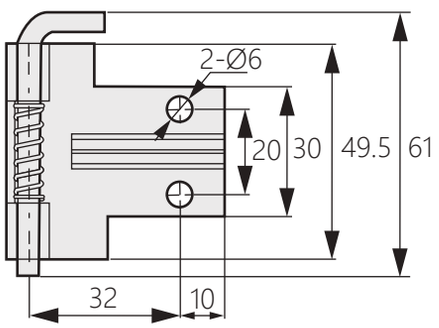

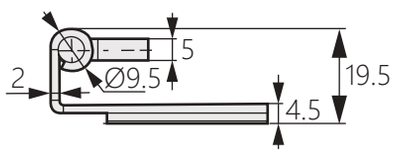

鑄鋼外露式可調節鉸鏈 OH-047

Cast steel exposed adjustable hinge



商品介紹:
- 大小邊設計，承重性更佳
- 材質:鑄鋼（SPCC）
- 表面處理:鍍彩鋅
- 用途:大型機箱機櫃、自動化設備、工業設備等

Product description:
- Big and small sides design, better bearing capacity
- Material: Cast steel (SPCC)
- Surface treatment: Color zinc plating
- Uses: Large-scale cabinets, automation equipment, industrial equipment, etc.

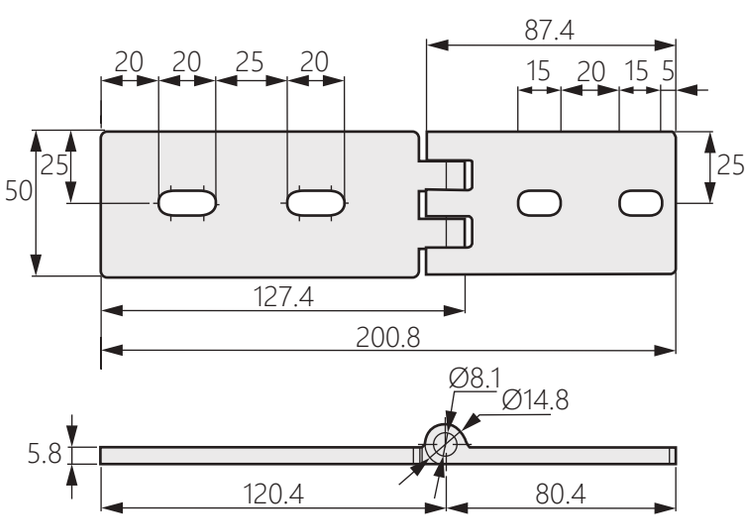

隱藏鉸鏈

OH-058

Hidden hinge



商品介紹:

- 隱藏式鉸鏈，從板內安裝
- 安裝時軸可以抽出，安裝完畢將軸打入固定
- 一端焊接式安裝
- 材質:冷軋鋼板(SPCC)
- 表面處理:鍍白鋅
- 用途:機箱機櫃、電氣櫃、工業箱體等
- 備註:左右開門兼用

Product description:

- Concealed hinges, installed from inside the board
- The shaft can be pulled out during installation, and the shaft will be fixed after installation
- One-side welding installation
- Material: Cold rolled steel plate (SPCC)
- Surface treatment: White zinc plating
- Uses: Chassis cabinets, electrical cabinets, industrial cabinets, etc.
- Note: Open both left and right doors

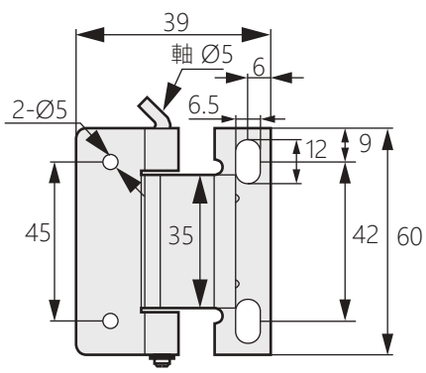

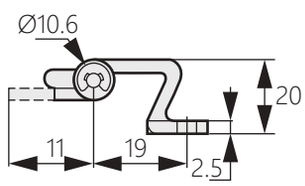

隱藏式鉸鏈

OH-080

Hidden hinge



商品介紹:

- 最大開啟角度90度
- 材質:鐵(SPCC)
- 表面處理:鍍藍鋅
- 用途:自動化設備、機櫃等
- 備註:左右開門兼用

Product description:

- Maximum opening angle of 90 degrees
- Material: Iron (SPCC)
- Surface treatment: Blue zinc plating
- Uses: Automation equipment, cabinets, etc.
- Note: Open both left and right doors

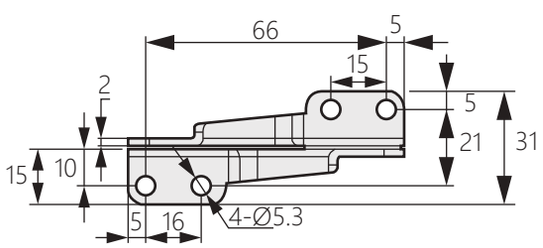

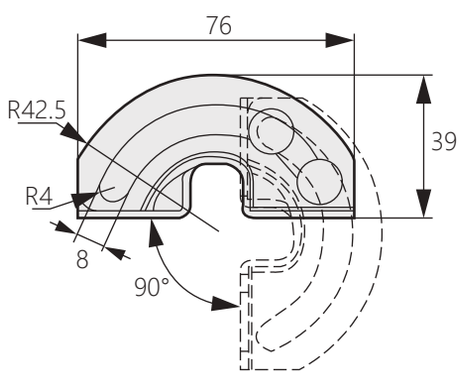

不鏽鋼冷凍庫鉸鏈門

OH-053

Stainless steel freezer hinge door



商品介紹:

- 凸門安裝，多種安裝高度及型號可選
- 最大開啟角度180度
- 材質:不鏽鋼（SUS304）
- 表面處理:拉絲拋光
- 用途:冷庫門、工業箱體等
- 備註:左右兼用型

Product description:

- Convex door installation, various installation heights and models are available
- Maximum opening angle of 180 degrees
- Material: Stainless steel (SUS304)
- Surface treatment: Brushed and polished
- Use: Cold storage doors, industrial cabinets, etc.
- Note: Left and right

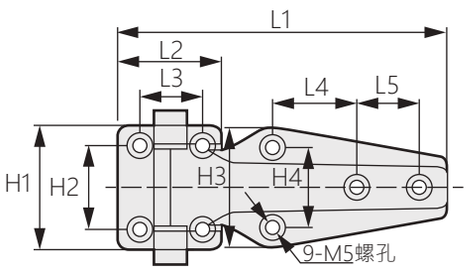

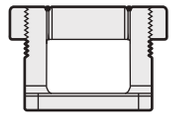

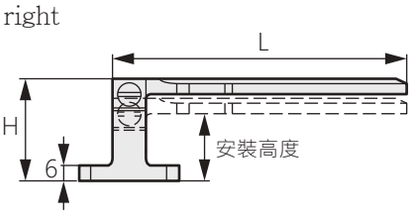

商品型號	H	H1	H2	H3	H4	L	L1	L2	L3	L4	L5	安裝高度
OH-053-1	38	46	31	44.5	29	108	121.5	38	23.5	31	23	24.5-32
OH-053-2	45.5	58	42	57.3	38.4	151	166	45	29	35	38	32-38
OH-053-3	57.5	64	48	57.3	39	158.5	175	49	32	37.5	44	50-38

隱藏可拆鉸鏈

OH-2810

Hidden removable hinge



商品介紹:

- 厚度僅1.5mm，屬於伸縮型鉸鏈
- 運用在門板上下端可拆式用途，也可作為門栓
- 材質:SUS304不鏽鋼、鋼材-鍍鋅
- 表面處理:震動亮面、黑色

Product description:

- The thickness is only 1.5mm, which is a telescopic hinge
- Used in the detachable use of the lower end of the door panel, can also be used as a door bolt
- Surface treatment: Shock bright surface, black
- Material: SUS304 stainless steel, steel-galvanized

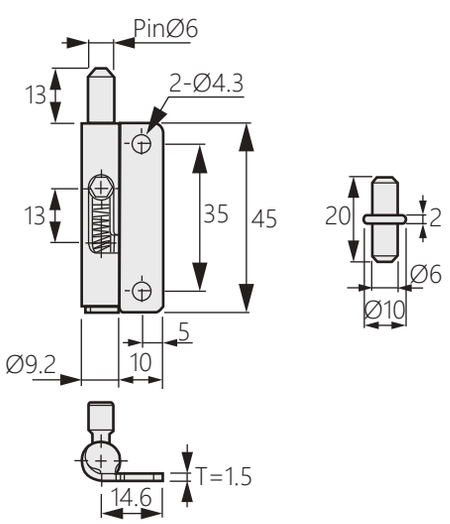

商品型號	型式	材質	表面處理	L	W	T
OH-2810-L	左開	304不鏽鋼	震動亮面	45	19.2	1.5
OH-2810-R	右開					
OH-2810-2-1L	左開	鋼材	黑色			
OH-2810-2-1R	右開					
OH-2810-2-2L	左開		鍍鋅			
OH-2810-2-2R	右開					

尼龍蝶型合頁

OH-265

Plastic Butt Hinge



商品介紹:

- ■安裝簡單易明，節省成本
- ■材質:尼龍玻璃纖維
- ■用途:電子設備外殼、工業機箱、工業設備、展品/ 標誌

Product description:

- ■Cost effective with simple, intuitive installation
- ■Material: PA
- ■Uses: Electronics enclosures, industrial equipment, industrial machinery, exhibits/signs.

【OH-265-1】

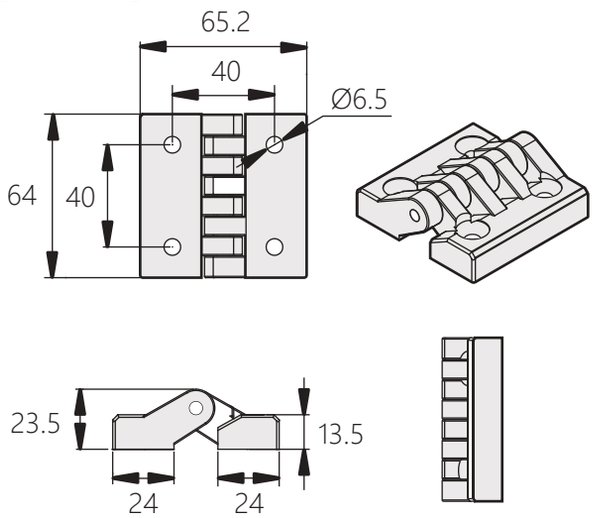

【OH-265-2】

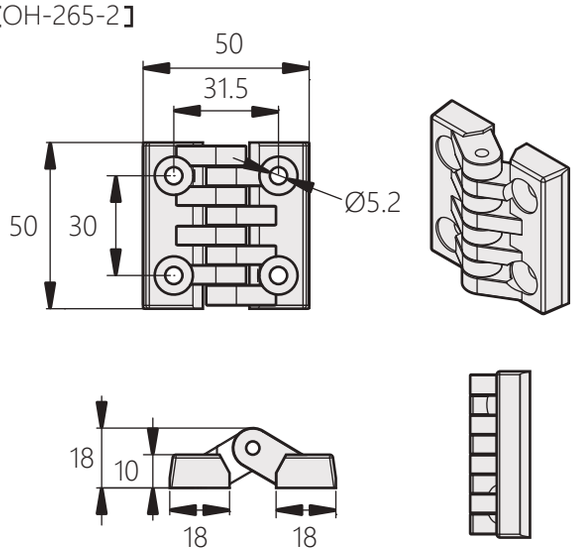

隱藏式合頁

OH-257

Concealed Door Removal Hinges



商品介紹:

- ■從門板正面看不見合頁，因而可以設計出防水性能更佳且外表美觀的箱體
- ■材質:不鏽鋼304、鋼鐵
- ■用途:電子設備外殼、工業機箱、工業設備、食品機械

Product description:

- ■It is not seen on the door surface.It can be used to design a cabinet with beautiful appearance as well as waterproof.
- ■Material: Stainless steel 304 ; Steel
- ■Uses: Electronics enclosures, industrial equipment, industrial machinery, exhibits/signs.

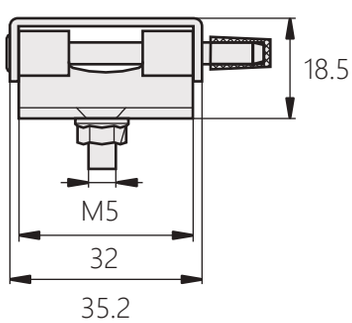

安裝示意圖

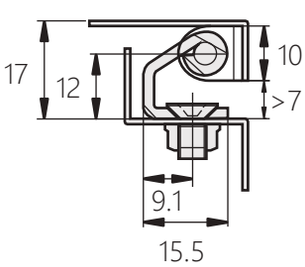

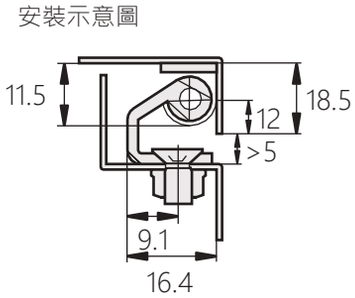

商品型號	材質
OH-257-1	不鏽鋼
OH-257-2	鋼鐵

內裝鉸鏈

Built-in hinge

OH-2408



商品介紹:

■ 材質:不鏽鋼304、 鋼材

Product description:

■ Material: Stainless steel 304, Steel

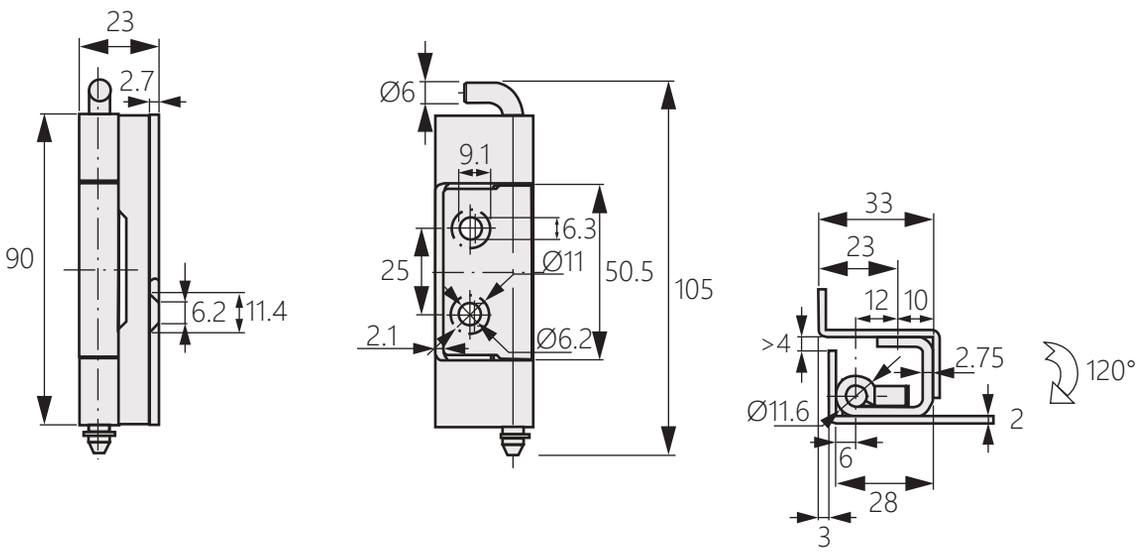

〔OH-2408-1〕

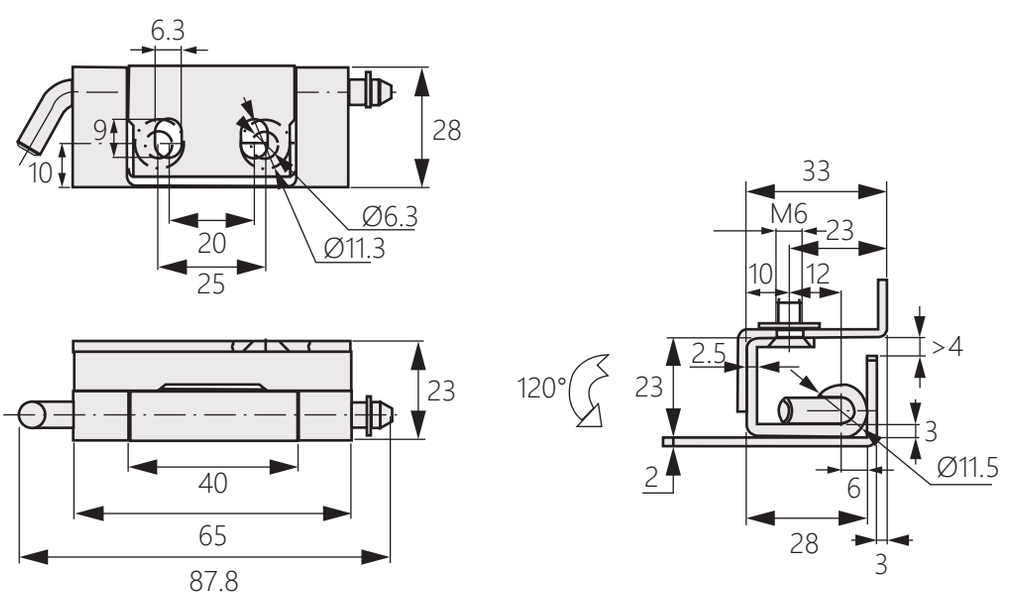

〔OH-2408-2〕

內裝鉸鏈

Built-in hinge

OH-2408

商品介紹:

■ 材質:不鏽鋼304、 鋼材

Product description:

■ Material: Stainless steel 304, Steel

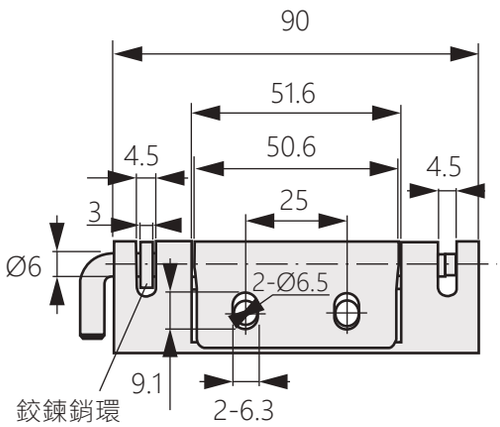

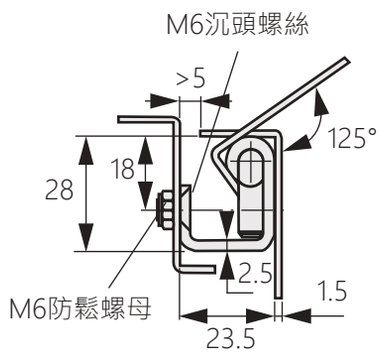

〔OH-2408-3〕

商品型號	
不鏽鋼	鐵
OH-2408-1-S	OH-2408-1-ST
OH-2408-2-S	OH-2408-2-ST
OH-2408-3-S	OH-2408-3-ST

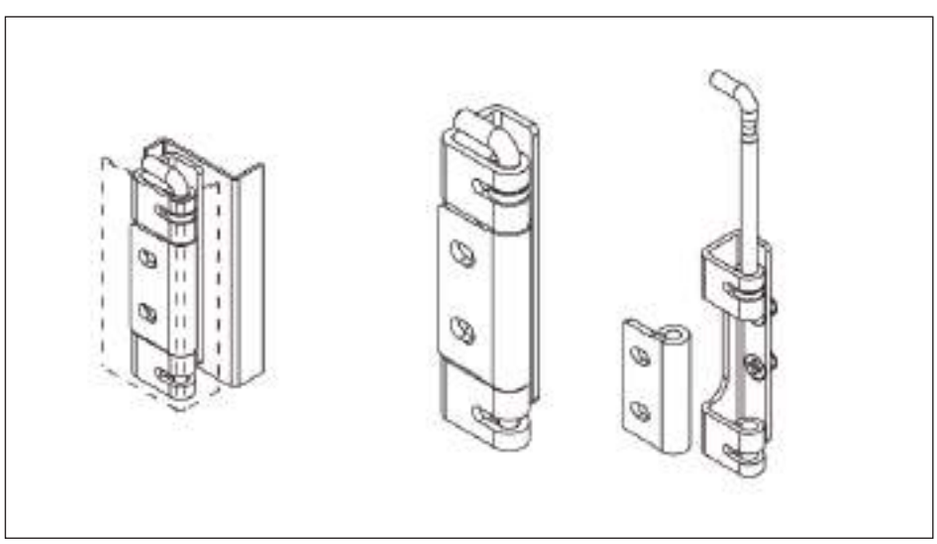

隱藏式鉸鍊

Hidden hinge

OH-201



商品介紹:
- 材質:鋅合金
- 固定片:鋼鐵、不鏽鋼
- 表面處理:黑色電著處理

Product description:
- Material: Stainless steel
- Swing leaf: Steel, stainless steel
- Surface treatment: Black powder coated

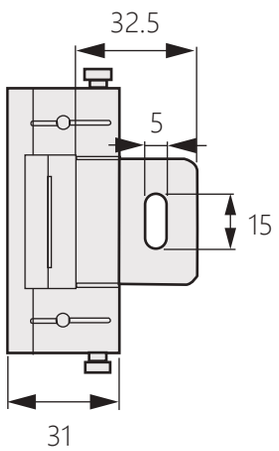

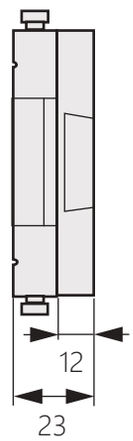

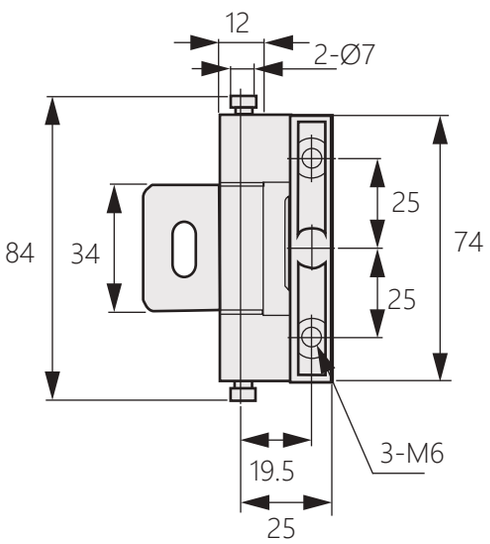

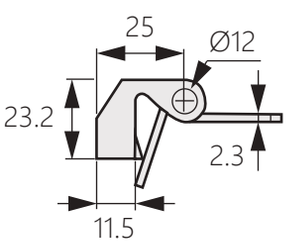

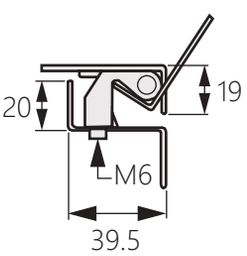

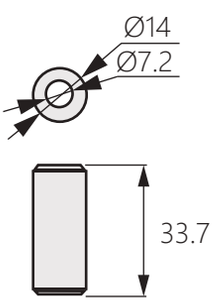

商品型號	材質
OH-201-1	鉸練主體
OH-201-ST	鐵製活動片
OH-201-S	不鏽鋼活動片
OH-201-3	套管附件

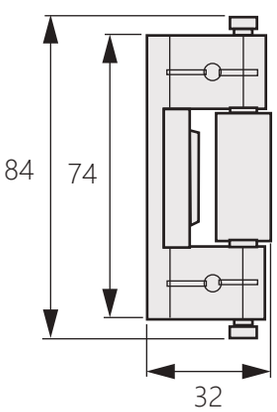

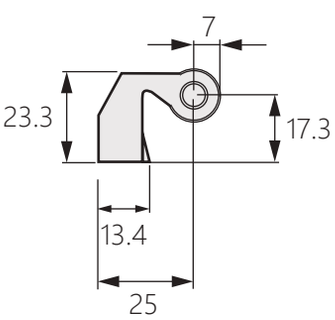

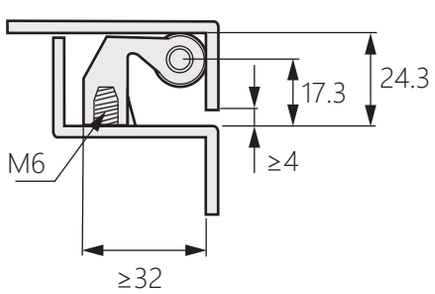

隱藏式鉸鏈

Hidden hinge

OH-202



商品介紹:

- 安裝時軸可以抽出，安裝完畢軸插入緊固
- 一端焊接式安裝
- 材質:鋅合金(ZDC)、冷軋鋼板(SPCC)
- 表面處理:黑色烤漆和鍍白鋅
- 用途:機箱機櫃、電氣櫃、工業箱體等
- 備註:左右開門兼用

Product description:

- The shaft can be pulled out during installation, and the shaft can be inserted and tightened after installation.
- One-side welding installation
- Material: Zinc alloy (ZDC), cold rolled steel plate (SPCC)
- Surface treatment: Black paint and white zinc plating
- Uses: Chassis cabinets, electrical cabinets, industrial cabinets, etc.
- Note: Open both left and right doors

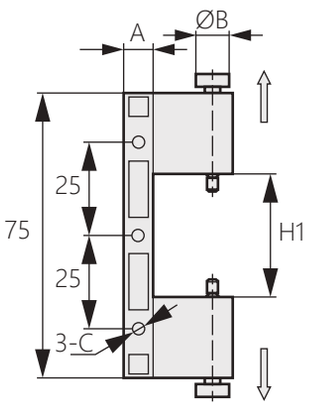

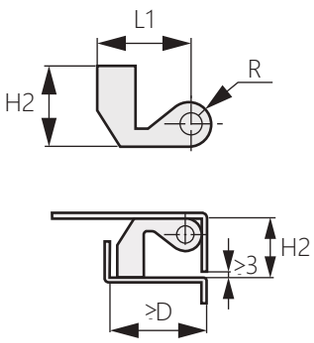

安裝圖

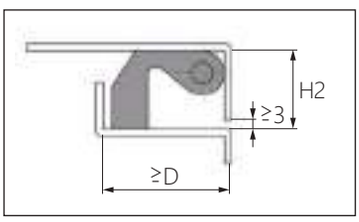

商品型號	H1	H2	L1	A	B	C	D	R
OH-202-1	32	18.5	20.5	8	5.3	M4	> 25	5
OH-202-2	35	24	25	11	7	M5	> 33	6

鋅合金鉸鏈-螺柱嵌入型

Zinc alloy hinge-stud embedded type

OH-226



商品介紹:

- 螺柱型
- 材質: 鋅合金
- 表面處理: 黑色塗裝
- 軸:不鏽鋼304

Product description:

- Stud type
- Material: Zinc alloy
- Surface treatment: Black paint
- Shaft: Stainless steel 304

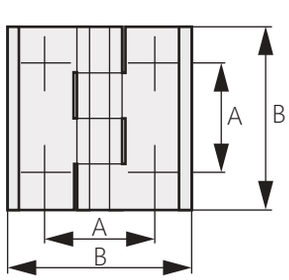

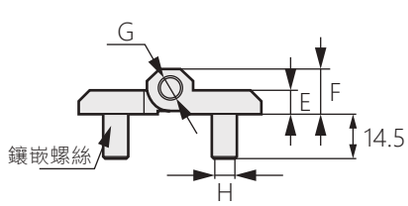

商品型號	A	B	E	F	G	H
OH-226-1	36	60	8	15	8	M8
OH-226-2	30	50	6	11.5	6	M6
OH-226-3	25	40	5	9	4	M5

隱藏式合頁

Concealed Door Removal Hinge

OH-256



商品介紹:

- 門可快速且輕鬆地卸下
- 安裝簡單易明，節省成本
- 隱藏式安裝硬件，確保外觀簡約且富專業感
- 材質:鋼鐵、不鏽鋼
- 用途:電子設備外殼、工業機箱、工業設備、展品/ 標誌、醫療設備

Product description:

- Doors can be removed quickly and easily
- Easy to install and save costs
- Concealed mounting hardware ensures a simple and professional look.
- Material: Steel, stainless steel
- Uses: Electronic equipment casing, industrial chassis, industrial equipment, exhibits / signs, medical equipment.

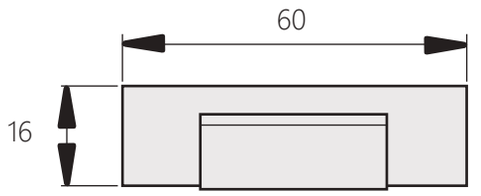

開孔尺寸

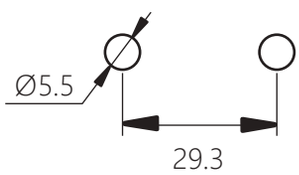

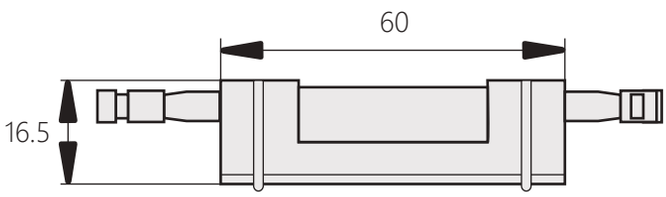

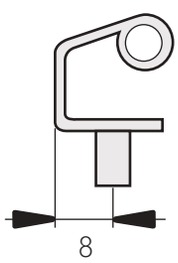

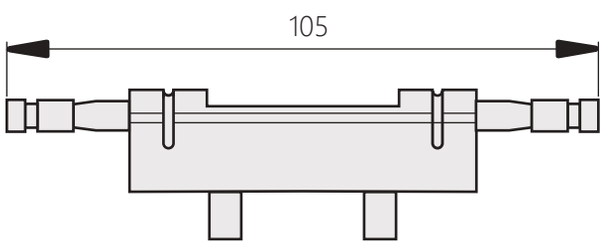

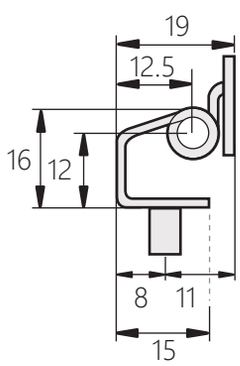

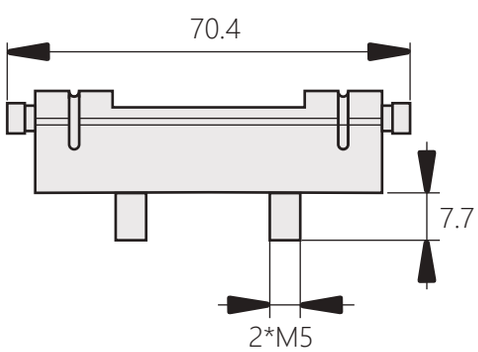

商品型號	材質
OH-256-1	鋼鐵
OH-256-2	不鏽鋼

插銷合頁

Coner Mount Hinge

OH-254

RoHS ZDC 鋅 CAD



[OH-254-1]

商品介紹:

- 拆卸合頁，方便安裝
- 材質:鋅合金
- 表面處理:黑色塗裝
- 用途:電箱、電櫃、小型機櫃

Product description:

- Disassemble the hinge for easy installation
- Material: Zinc alloy
- Surface treatment: Black coating
- Uses: Electric box, electric cabinet, small cabinet.

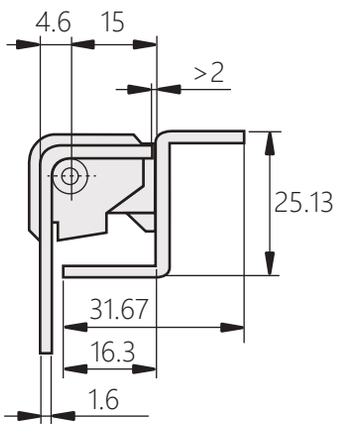

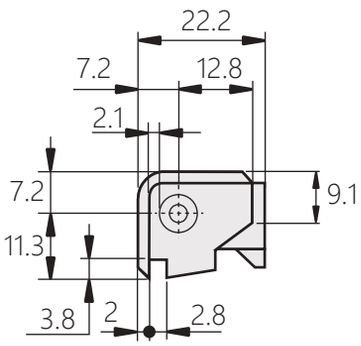

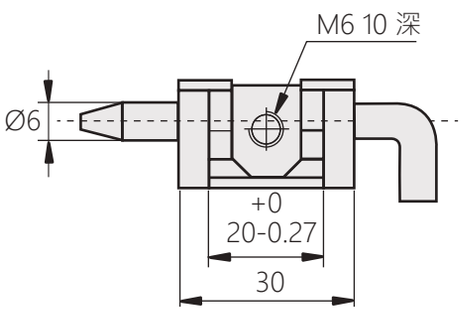

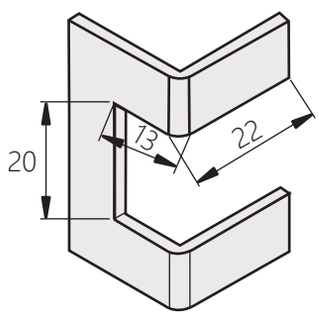

[OH-254-2]

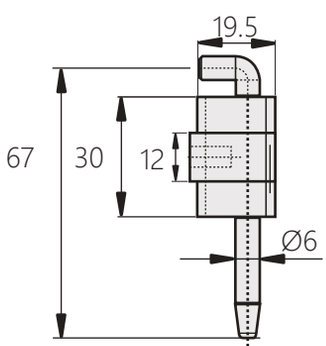

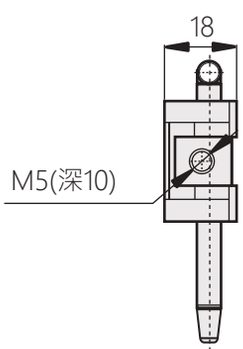

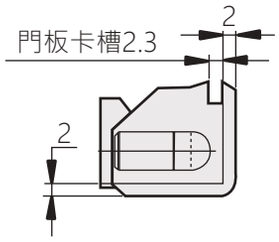

插銷合頁 OH-253

Quick release hinge



商品介紹:
- 拆卸合頁，方便安裝
- 材質:鋅合金
- 表面處理:無光黑
- 用途:電箱、電櫃、小型機櫃

Product description:
- Disassemble the hinge for easy installation
- Material: Zinc alloy
- Surface treatment: Matt black
- Uses: Electric box, electric cabinet, small cabinet.

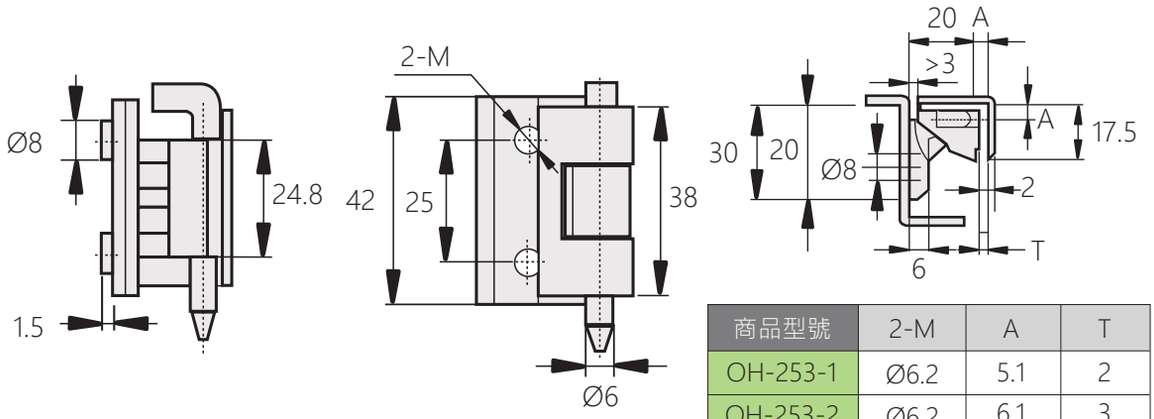

商品型號	2-M	A	T
OH-253-1	Ø6.2	5.1	2
OH-253-2	Ø6.2	6.1	3
OH-253-3	M6	5.1	1.5
OH-253-4	M5	4.6	2.0

插銷合頁 OH-1005

Latch hinge



商品介紹:
- 左右兼用型
- 材質:不鏽鋼或鐵
- 表面處理:振動研磨、鍍藍鋅
- 用途:機箱機櫃、自動化設備、醫療設備等

Product description:
- Left and right
- Material: Stainless steel or iron
- Surface treatment: Vibration grinding, blue zinc plating
- Uses: Chassis cabinets, automation equipment, medical equipment, etc.

OH-1005-1-L
OH-1005-1-R
OH-1005-2-L
OH-1005-2-R

OH-1005-3-L
OH-1005-3-R
OH-1005-4-L
OH-1005-4-R

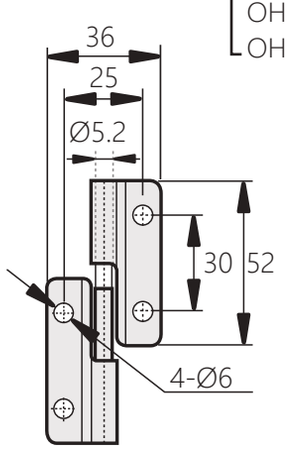

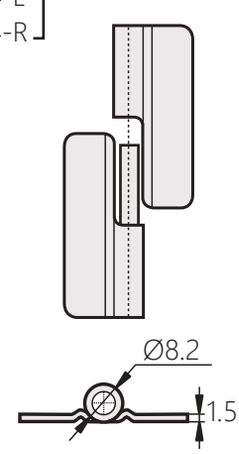

商品型號	材質	結構
OH-1005-1-L	鐵	有孔
OH-1005-1-R	鐵	有孔
OH-1005-2-L	不鏽鋼	有孔
OH-1005-2-R	不鏽鋼	有孔
OH-1005-3-L	鐵	無孔
OH-1005-3-R	鐵	無孔
OH-1005-4-L	不鏽鋼	無孔
OH-1005-4-R	不鏽鋼	無孔

不鏽鋼快拆式合頁

S.S lift-Off Hinges

OH-1004



商品介紹:

- 左右開門分別
- 可輕鬆、快速且安全的將門卸下，無需使用任何的工具
- 且在嚴苛的環境中提供出色的耐久性以及抗腐蝕能力
- 材質:不鏽鋼304
- 表面處理:震動研磨
- 用途:電子設備外殼、工業機箱、工業設備、展品/ 標誌

Product description:

- Left & Right Hand Mounting
- Allow doors to be removed quickly, easily and safely without the use of tools.
- Provides superior durability and corrosion-resistance in demanding environments.
- Material: Stainless Steel 304
- Surface treatment: Vibration Grind
- Uses: Electronic equipment casing, industrial chassis, industrial equipment, exhibits / signs.

[OH-1004-1-R
OH-1004-2-R]

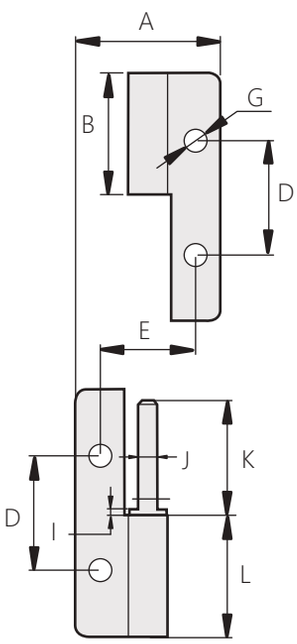

[OH-1004-1-L
OH-1004-2-L]

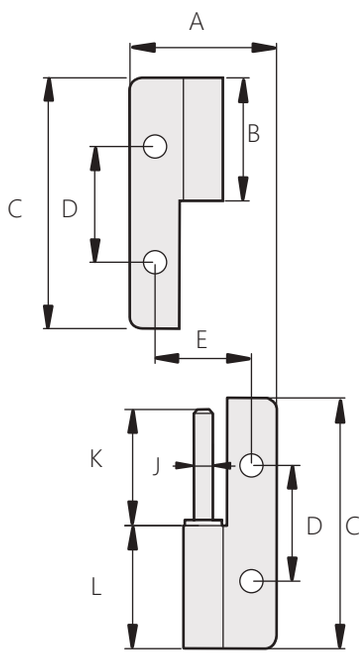

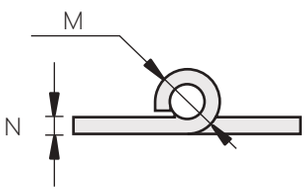

安裝示意圖





商品型號	結構	A	B	C	D	E	J	K	L	I	G	M	N
OH-1004-1-R	有孔	38	31.9	65	30	25	5	30.1	31.9	1.5	4×Ø6	Ø10.3	2.5
OH-1004-1-L	有孔												
OH-1004-2-R	無孔											Ø10.3	2.5
OH-1004-2-L	無孔												

拆卸鉸鏈

Detachable Hinge

OH-0332

ZDC 鋅 CAD



商品介紹:

- 左右開門兼用
- 最大開啟角度180度
- 六孔安裝，更加牢固
- 材質:鋅合金(ZDC)
- 表面處理:銀色噴塗
- 用途:機箱機櫃、小型工業箱體等

Product description:

- Open the door left and right
- Maximum opening angle 180 degrees
- Six-hole mounting for a stronger
- Material: Zinc Alloy (ZDC)
- Surface treatment: Silver spray
- Uses: Chassis cabinets, small industrial cabinets, etc.

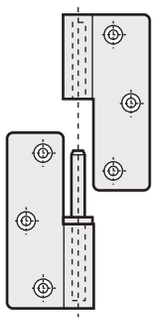

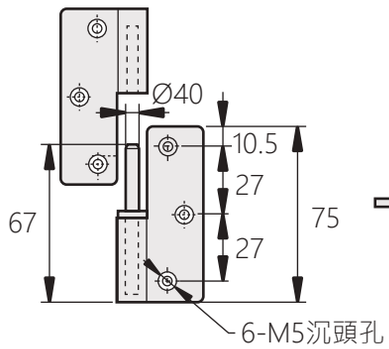

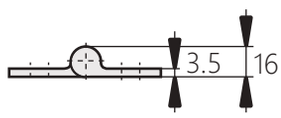

商品型號	方向
OH-0332-1L	左邊(L)
OH-0332-1R	右邊(R)

拆卸鉸鏈

Detachable Hinge

OH-221

ZDC 鋅 CAD



OH-221-1L



OH-221-1R

商品介紹:

- 最大開啟角度180度
- M5螺柱設計，板內安裝螺母
- 材質:鋅合金(ZDC)
- 表面處理:黑色噴砂
- 用途:機箱機櫃、自動化設備等

Product description:

- Maximum opening angle 180 degrees
- M5 stud design, plate mounting nut
- Material: Zinc Alloy (ZDC)
- Surface treatment: Bright chrome plated
- Uses: Chassis cabinets, automation equipment.

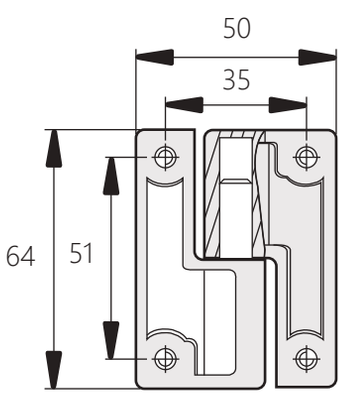

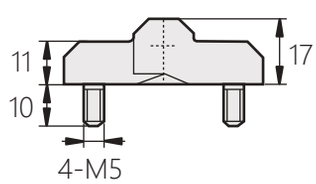

商品型號	方向
OH-221-1L	左邊(L)
OH-221-1R	右邊(R)

拆卸鉸鏈

OH-044

Detachable Hinge





OH-044-1L　　OH-044-1R

商品介紹:

- 安裝方便快捷，使用簡單
- 鉸鏈可以開啟到180度
- 材質:冷軋鋼板(SPCC)
- 用途:機箱機櫃、電箱、電櫃

Product description:

- Easy to install and easy to use
- The hinge can be opened to 180 degrees
- Material: Cold rolled steel plate (SPCC)
- Uses: Chassis cabinet、electric box、electric cabinet

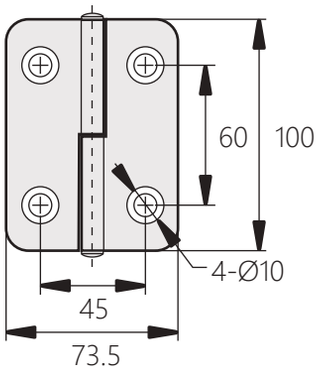

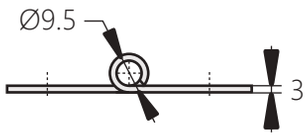

商品型號	方向
OH-044-1L	左邊(L)
OH-044-1R	右邊(R)

拆卸式鉸鏈

OH-0331

Detachable Hinge



商品介紹:

- 外觀美觀，操作簡單，最大開啟角度135度產品
- 材質:鋅合金(ZDC)
- 表面處理:銀色噴漆
- 用途:機箱機櫃、網絡機櫃、小型工業箱體等

Product description:

- Beautiful appearance, easy operation, maximum opening angle 135 degrees.
- Material: Zinc Alloy (ZDC)
- Surface treatment: Silver paint
- Uses: Chassis cabinets, network cabinets, small industrial cabinets, etc.

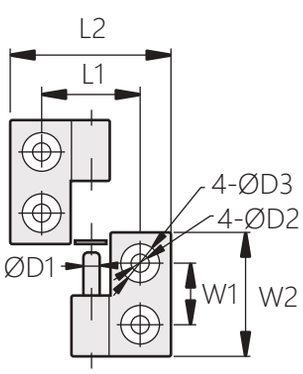

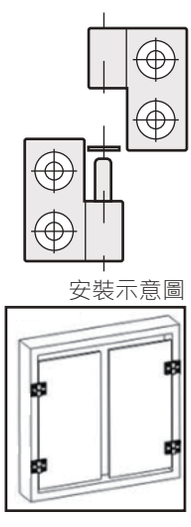

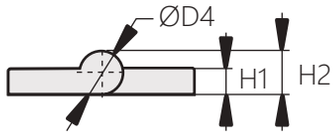

商品型號	L1	L2	W1	W2	D1	D2	D3	D4	H1	H2
OH-0331-1L	18	30	12	24	4	4	8	4	7	8
OH-0331-1R										
OH-0331-2L	32	52	20	40	5	6	12	7	7	11.5
OH-0331-2R										
OH-0331-3L	35	60	25	45	8	6.5	11	16	8	16.5
OH-0331-3R										

彈簧合頁

Removal Spring Loaded Hinge

OH-1206



商品介紹:

- 門可快速且輕鬆地卸下
- 安裝簡單易明，節省成本
- 彈簧加載可伸縮銷設計鎖定到縮回位置，更容易安裝/拆卸門
- 材質:鋼鐵、不鏽鋼
- 用途:電子設備外殼、工業機箱、工業設備、展品/ 標誌

Product description:

- Doors can be removed quickly and easily
- Easy to install and save costs
- Spring-loaded retractable pin design locks into retracted position for easier installation/removal of the door.
- Material: Steel, stainless steel
- Uses: Electronic equipment casing, industrial chassis, industrial equipment, exhibits / signs

[OH-1206-1 OH-1206-2 OH-1206-3 OH-1206-5 OH-1206-6]

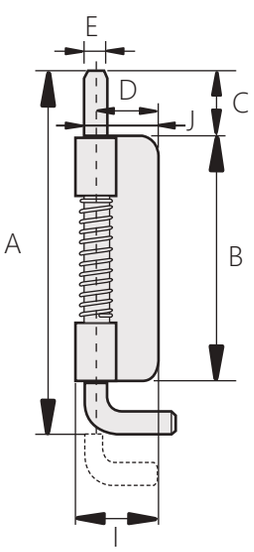

[OH-1206-4]

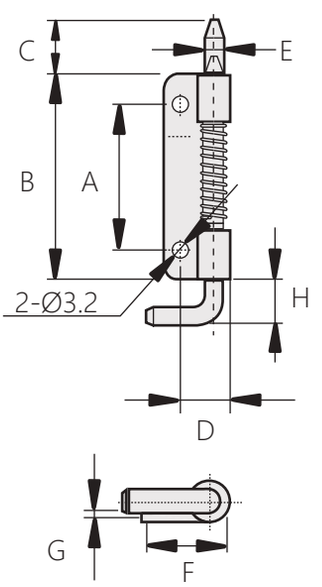

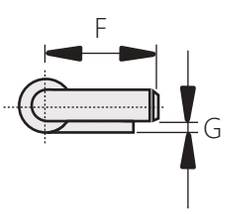

配件尺寸

[OH-1206-T2-1 OH-1206-T2-4 OH-1206-T3-1]



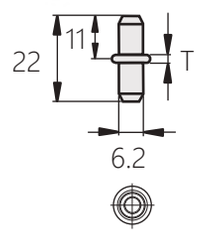

[OH-1206-T2-2 OH-1206-T2-3]



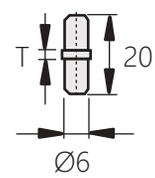

商品型號	材質	T
OH-1206-T2-1	不鏽鋼	2
OH-1206-T2-2	不鏽鋼	2
OH-1206-T2-3	鐵	2
OH-1206-T2-4	鐵	2
OH-1206-T3-1	鐵	3

安裝示意圖

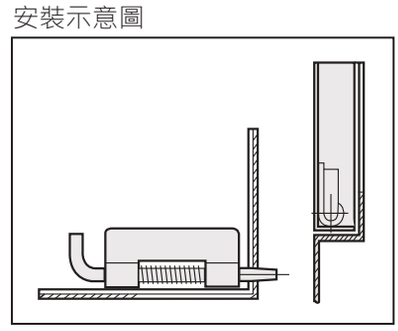

商品型號	結構	材質	A	B	C	D	E	F	G	H	I	J
OH-1206-1	有孔	鐵	89	62.5	15	21.4	6	17	2			
OH-1206-2	無孔	鐵	89	62.5	15	21.4	6	17	2			
OH-1206-3	無孔	不鏽鋼	89	62.5	15	21.4	6	17	2			
OH-1206-4	有孔	鐵	19	32	10	11.5	Ø4	16.5	1.5	9.5		
OH-1206-5	無孔	鋼鐵		62	20		Ø6.3		2		26	22
OH-1206-6	無孔	不鏽鋼		62	20		Ø6.3		2		26	22

Slide rail & Gas pressure HG
滑軌&氣壓棒

Slide rail & Gaspressure bar HG
滑軌&氣壓棒

Slide rail & Gaspressure HG
滑軌&氣壓棒

Slide rail & Gas pressure bar HG
滑軌&氣壓棒

Slide rail & Gas pressure bar HG
滑軌&氣壓棒



測量設備開閉器

HG-001

Measuring device shutter



商品介紹:

- 多個活動支點，方便開啟和安裝
- 可安裝在板內，實現隱藏式安裝
- 分左右安裝規格
- 材質:鐵
- 表面處理:鍍鎳或振動拋光
- 用途:設備門窗、測量設備、通信設備等

Product description:

- Multiple activity pivots for easy opening and installation
- Can be installed in the board for hidden installation
- Install the left and right specifications
- Material: Iron(spcc)
- Surface treatment: Nickel plating or vibration polishing
- Uses: Equipment doors and windows, measuring equipment, communication equipment, etc.

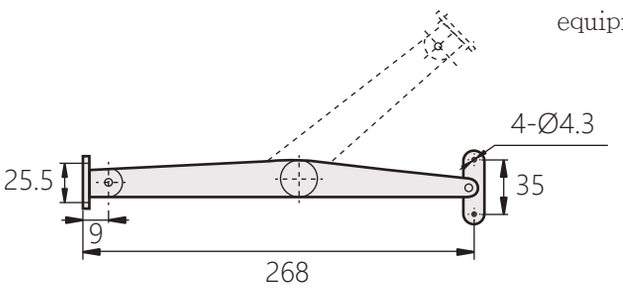

商品型號	方向
HG-001-1-1	左邊
HG-001-1-2	右邊

27寬度輕型二節滑軌

HG-027

27 width light two-section slide rail



商品介紹:

- 採用冷軋鋼板材質，特殊折彎處理，承載性能優越
- 多種尺寸規格可選
- 結構設計優良，滑動無噪音
- 使用壽命長
- 材質:冷軋鋼板(SPCC)
- 表面處理:鍍藍鋅
- 用途:計算機、通訊櫃、醫療設備、複印機等

Product desciption:

- Made of cold-rolled steel plate, special bending treatment, superior bearing performance
- Available in a variety of sizes
- Excellent structural design, no noise on the slide
- long lasting
- Material: Cold rolled steel plate (SPCC)
- Surface treatment: Blue zinc plating
- Uses:Computers, communication cabinets, medical equipment, copiers, etc

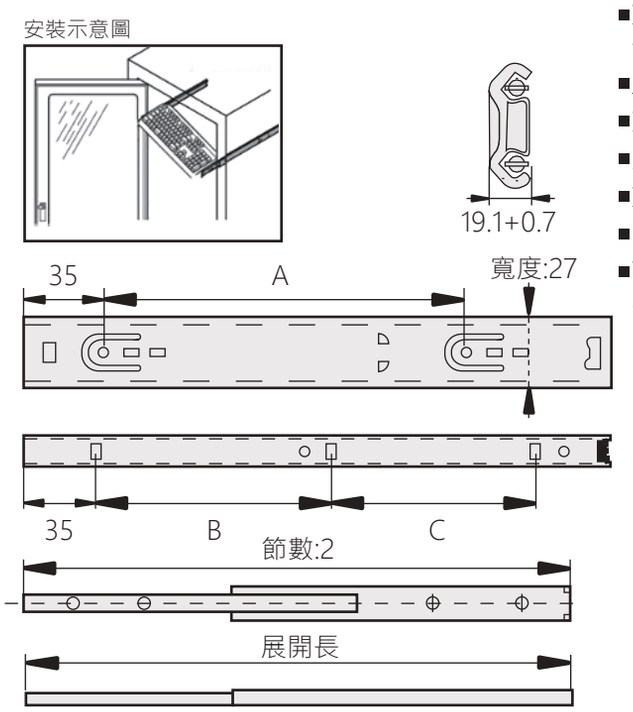

商品型號	閉合長	展開長	英制	A	B	E
HG-027-1	300	514.5	12″	191.9	127.3	96.6
HG-027-2	350	583	14″	128	128	160
HG-027-3	400	668	16″	319.6	191.9	128.7

自由定位滑撐開閉器

HG-0120

Free-position sliding support shutter



商品介紹:

- 五段式，十段式兩種規格
- 隱藏式安裝，不佔用太多空間
- 關閉時一次拉到底再關閉
- 材質:不鏽鋼(SUS304).鐵（SPCC）
- 表面處理:五彩、亮面
- 用途:設備門窗、天窗等

Product description:

- Five-stage and ten-stage specifications
- Concealed installation, occupy less space
- Disposable pull in the end and then close
- Material: SUS304,SPCC
- Surface treatment: Chromic acid passivated, Vibration ground
- Uses: Equipment doors, skylights

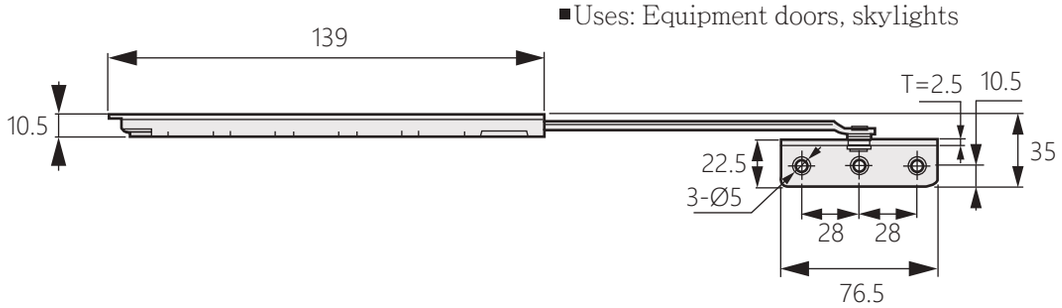

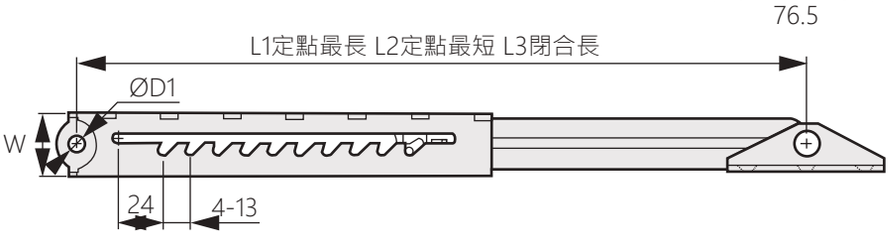

[HG-0120-1-1]
[HG-0120-2-1]

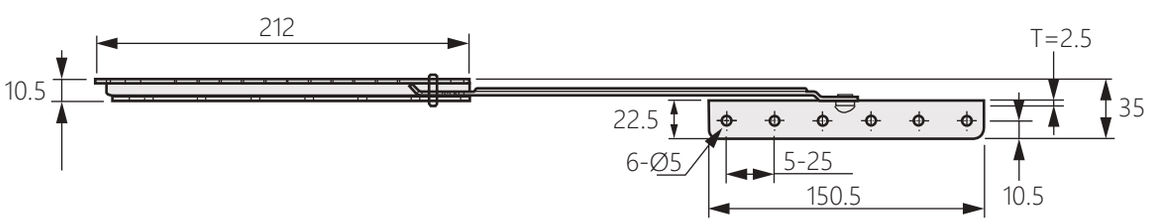

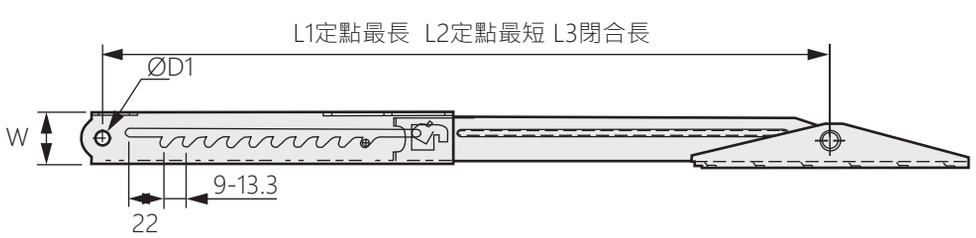

[HG-0120-1-2]
[HG-0120-2-2]

商品型號	材質	表面處理	L1	L2	L3	W	D1	荷重 (KG/PCS)
HG-0120-1-1	SPCC	五彩	214	164	140	30	6.5	58
HG-0120-1-2			355	235	213			
HG-0120-2-1	SUS304	亮面	214	164	140			
HG-0120-2-2			355	235	213			

45寬度輕型三節滑軌 HG-053

45 width light three-section slide rail



商品介紹:

- ■使用壽命長，特殊折彎處理，承載性能優越
- ■多種尺寸規格可選，適合大多數客戶選型
- ■結構設計優良，滑動無噪音
- ■材質:冷軋鋼板(SPCC)
- ■表面處理:鍍藍鋅
- ■用途:設備門窗、測量設備、通信設備等

Product description:

- ■Long service life, special bending treatment, superior bearing performance
- ■Available in a variety of sizes, suitable for most customer selections
- ■Excellent structural design, no noise on the slide
- ■Material: Cold rolled steel
- ■Surface treatment: Blue zinc plating
- ■Uses: Equipment doors and windows, measuring equipment, communication equipment, etc.

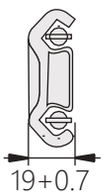

安裝示意圖

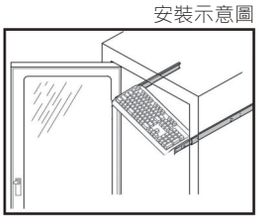

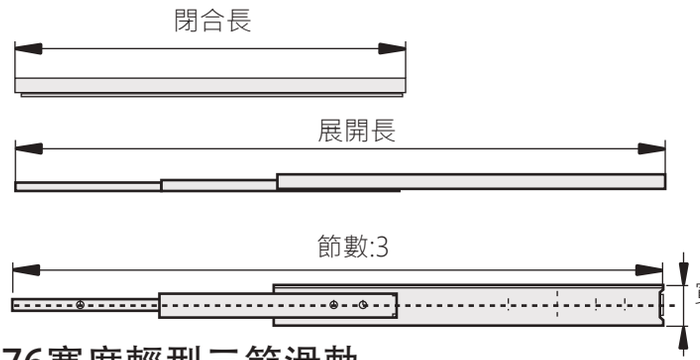

商品型號	英制	閉合長	展開長	板厚
HG-053-1	10″	254	508	2.0
HG-053-2	14″	356	712	2.0
HG-053-3	18″	457	914	2.0
HG-053-4	30″	762	1524	2.0

76寬度輕型三節滑軌 HG-076

76 width light three-section slide rail



商品介紹:

- ■使用壽命長，特殊折彎處理，承載性能優越
- ■多種尺寸規格可選，適合大多數客戶選型
- ■結構設計優良，滑動無噪音
- ■材質:冷軋鋼板(SPCC)
- ■表面處理:鍍藍鋅
- ■用途:設備門窗、測量設備、通信設備等

Product description:

- ■Long service life, special bending treatment, superior bearing performance
- ■Available in a variety of sizes, suitable for most customer selections
- ■Excellent structural design, no noise on the slide
- ■Material: Cold rolled steel
- ■Surface treatment: Blue zinc plating
- ■Uses: Equipment doors and windows, measuring equipment, communication equipment, etc.

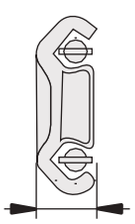

安裝示意圖

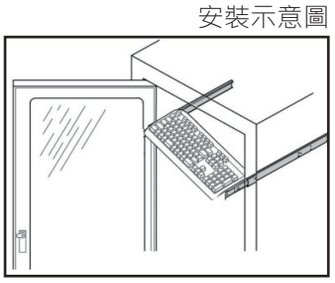

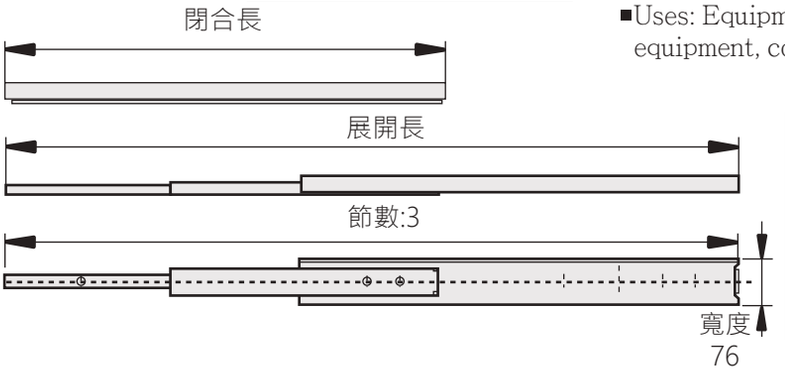

商品型號	英制	閉合長	展開長	板厚
HG-076-1	14″	356	712	2.5
HG-076-2	18″	457	914	
HG-076-3	22″	559	1118	
HG-076-4	30″	762	1524	

不鏽鋼製滑軌

HG-171

Waterproof Flat Lift And Turn Latch



商品介紹:

- ■外觀漂亮，小型輕巧安裝方便
- ■滑動部使用滾珠設計，作動順暢
- ■材質:不鏽鋼304
- ■用途:小型零組件的滑軌機構

Product description:

- ■Beautiful appearance, small and lightweight, easy to install
- ■The sliding part uses a ball design for smooth movement
- ■Material: Stainless steel 304
- ■Uses: Slide mechanism of small components

商品型號	拉出長度		長度	A1	A	B	C	D	E	F	G	H
HG-171-1	10"	254	250						192			
HG-171-2	12"	305	300						242	224		
HG-171-3	14"	356	350						292	224		
HG-171-4	16"	406	400			320			342	224	320	
HG-171-5	18"	457	450	128		320			392	224	352	
HG-171-6	20"	508	500	128		352			442	224	416	
HG-171-7	22"	559	550	128			416		492	224	352	448

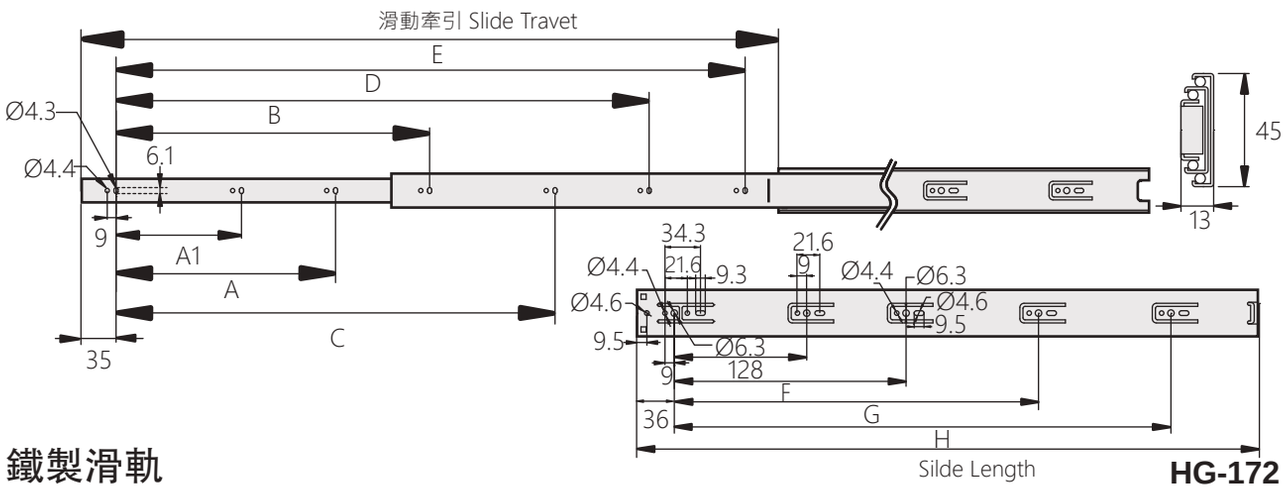

鐵製滑軌

HG-172

Waterproof Flat Lift And Turn Latch



商品介紹:

- ■外觀漂亮，小型輕巧安裝方便
- ■滑動部使用滾珠設計，作動順暢
- ■材質:鐵
- ■用途:小型零組件的滑軌機構

Product description:

- ■Beautiful appearance, small and lightweight, easy to install
- ■The sliding part uses a ball design for smooth movement
- ■Material: Iron
- ■Uses: Slide mechanism of small components

商品型號	拉出長度	A1	B1	A	B	C	D	E	荷 重 (公斤/對)
HG-172-1	10"	250	250	96			169.4		80
HG-172-2	12"	300	300	160			96	128	70
HG-172-3	14"	350	350	160			128	128	60
HG-172-4	16"	400	400	160	64		128	192	50
HG-172-5	18"	450	450	160	128		160	192	45
HG-172-6	20"	500	500	160	128	64	192	224	35
HG-172-7	22"	550	550	160	128	64	224	224	25
HG-172-8	24"	600	605	160	128	128	256	256	18

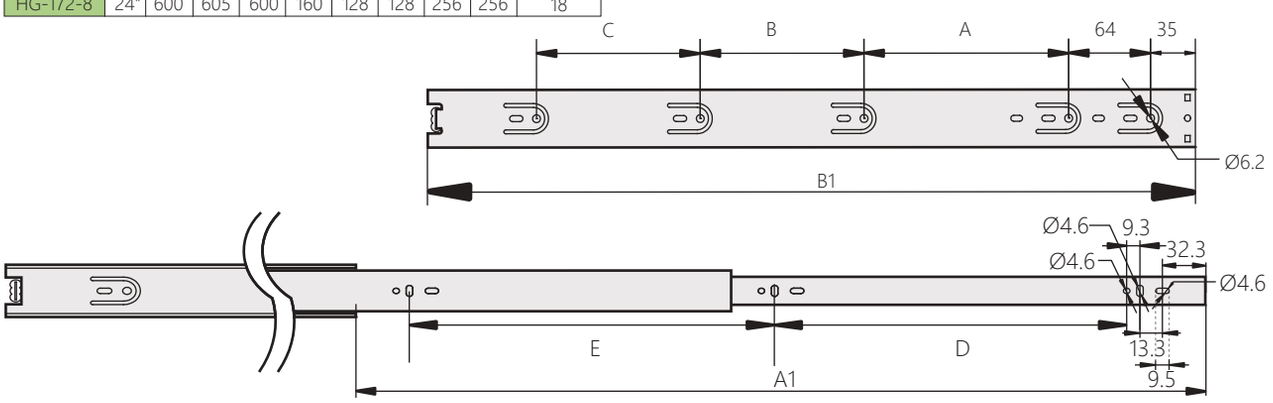

6mm*15mm 氣壓棒/氣壓挺桿

HG-181

6mm*15mm gas pressure bar / pneumatic tappet



商品介紹:

- 材質:氣壓棒主體 - 碳鋼、選配件 - 鐵
- 表面處理:黑色塗裝
- 用途:車輛工業:壓支撐汽車引擎蓋、後門、
  巴士座椅及行旅箱門、側門及特殊重行交通工具
  機械設備:機台掀門、電氣箱、工具箱、電子設備、
  無塵室設備、板金工業、金融系統設備
  建築業:大樓氣窗及排煙系統之氣壓支撐及緩降
  其它:工程師及研發人員設計使用
- 備註:1.另有不鏽鋼材質產品
  2.訂購氮氣缸時請告知所需的壓力 (N)
  3.客戶設計使用時，有效行程至少需再預留
  5~10mm以上防止撞擊氮氣缸體而造成氮氣缸損壞

商品型號	行程(A)	總長(B)	壓力承製範圍(N)
HG-181-1	40	159	訂購氮氣缸時 請告知 所需的壓力(N) 50 ~ 300
HG-181-2	60	199	
HG-181-3	80	240	
HG-181-4	90	255	
HG-181-5	100	280	
HG-181-6	120	321	
HG-181-7	150	380	
備註:9.8 牛頓(N)=1公斤(KG)=2.2磅(LBS)			

Product description:

- Material: Gas Spring-Carbon steel;
  Optional components-Steel
- Surface treatment: Black coating
- Uses: Application Vehicle components and Automobiles:Rear door; Engine hood; Bus seat; Bus luggage door; Remodeling. Industrial：ATM machinery; Tool boxes; Switch boxes; Hatches and all kinds of Machinery equipment. Building: Windows; Doors; Manhole covers; Fire escape windows. Other:Wide application for R&D Personnel, Gas spring use in everywhere according to your design
- Note: 1. Another stainless steel product
  2. Please inform the required pressure when ordering the nitrogen cylinder (N)
  3. When the customer designs and uses, the effective itinerary must be reserved at least 5~10mm or more to prevent impact on the nitrogen cylinder block but the cylinder is damaged

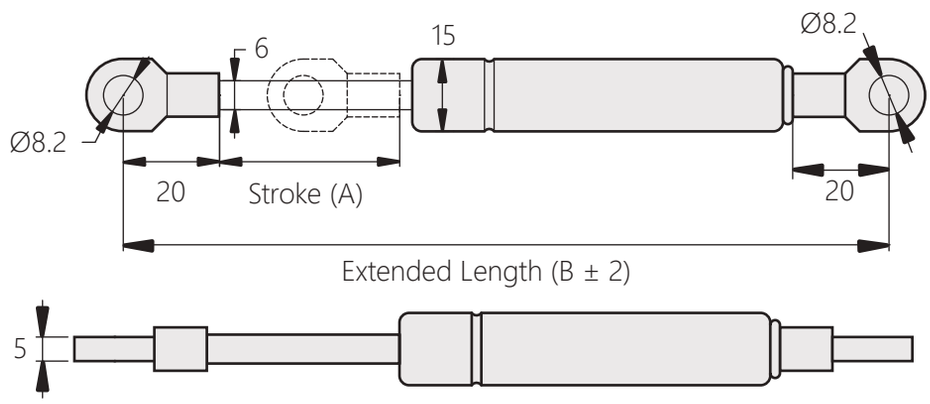

選配件

[TH-11-1-1]

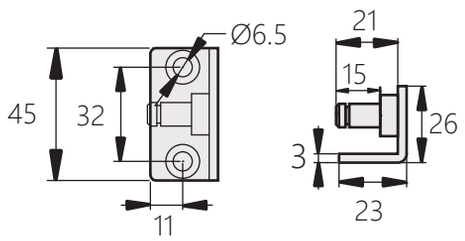

[TH-11-2-1]

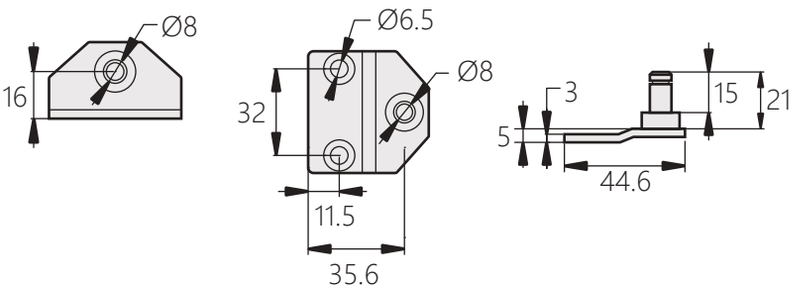

6mm*15mm 氣壓棒/氣壓挺桿

HG-182

6mm*15mm gas pressure bar / pneumatic tappet

CAD



商品介紹:

- 材質:氣壓棒主體-碳鋼、選配件-鐵
- 表面處理:黑色塗裝，另有不鏽鋼材質商品
- 備註: 客戶設計使用時，有效行程至少需再預留 5~10mm以上防止撞擊氮氣缸體而造成氮氣缸損壞
- 適用:車輛工業:氣壓支撐汽車引擎蓋、後門、巴士座椅及行旅箱門、側門及特殊重行交通工具。機械設備:機台掀門、電氣箱、工具箱、電子設備、無塵室設備、板金工業、金融系統設備。 建築業:大樓氣窗及排煙系統之氣壓支撐及緩降。 其它:工程師及研發人員設計使用。

Product description:

- Material: Pneumatic rod body-carbon steel, optional-iron
- Surface treatment: Black coating, stainless steel
- Note: When the customer designs and uses, the effective stroke must be reserved at least 5~10mm above to prevent impact of the nitrogen cylinder body caused but the cylinder is damaged
- Uses: Vehicle industry: Pneumatic support car hood, back door, bus seats and travel box doors, side doors and special re-transportation vehicles. Machinery and equipment: machine door hatchback, electrical box, toolbox, electronic equipment, clean room equipment, sheet gold industry, financial system equipment. Construction industry: Air pressure support and slow drop of the building air window and smoke exhaust system. Others: Engineers and R & amp; d personnel design and use.

商品型號	行 程 (A)	總 長 (B)	壓力 承製範圍(N)
HG-182-1	40	159	訂購氮氣缸時 請告知 所需的壓力(N) 50 ~ 300
HG-182-2	60	199	
HG-182-3	80	240	
HG-182-4	90	255	
HG-182-5	100	280	
HG-182-6	120	321	
HG-182-7	150	380	
備註:9.8 牛頓(N)=1公斤(KG)=2.2磅(LBS)			

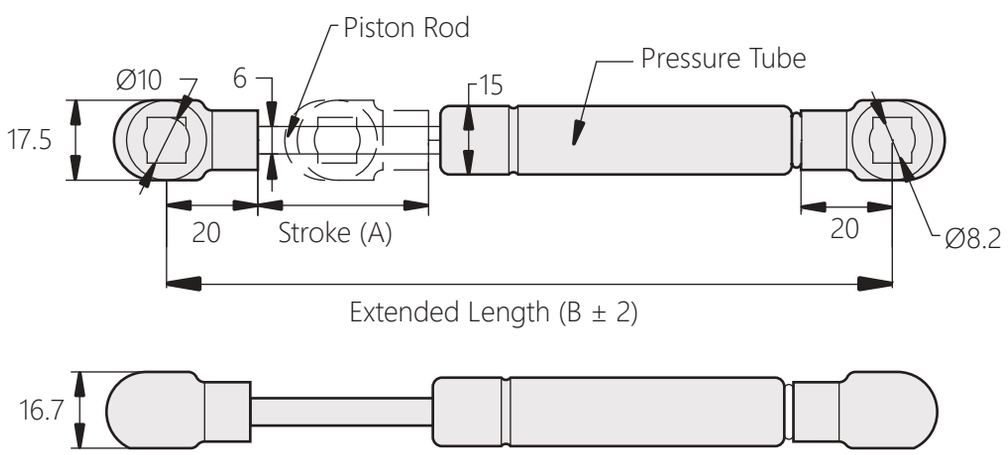

選配件

[TH-11-1-2]

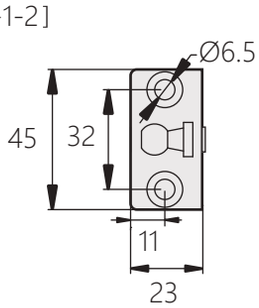

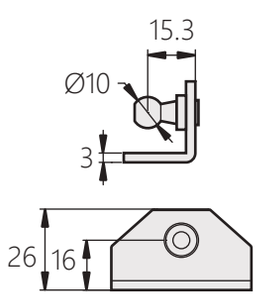

[TH-11-2-2]

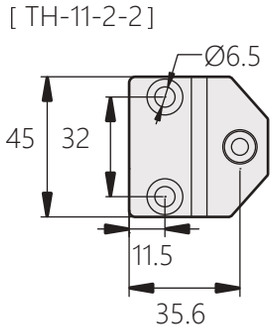

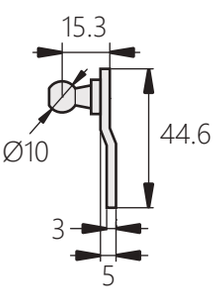

8mm*18mm 氣壓棒/氣壓挺桿

HG-183

8mm*18mm gas pressure bar / pneumatic tappet



商品介紹:

- 材質:氣壓棒主體-碳鋼、選配件-鐵
- 表面處理:黑色塗裝，另有不鏽鋼材質商品
- 備註: 客戶設計使用時，有效行程至少需再預留 5~10mm以上防止撞擊氮氣缸體而造成氮氣缸損壞
- 適用:車輛工業:氣壓支撐汽車引擎蓋、後門、巴士座椅及行旅箱門、側門及特殊重行交通工具。機械設備:機台掀門、電氣箱、工具箱、電子設備、無塵室設備、板金工業、金融系統設備。 建築業:大樓氣窗及排煙系統之氣壓支撐及緩降。 其它:工程師及研發人員設計使用。

Product description:

- Material: Pneumatic rod body-carbon steel, optional-iron
- Surface treatment: Black coating, stainless steel
- Note: When the customer designs and uses, the effective stroke must be reserved at least 5~10mm above to prevent impact of the nitrogen cylinder body caused but the cylinder is damaged
- Uses: Vehicle industry: Pneumatic support car hood, back door, bus seats and travel box doors, side doors and special re-transportation vehicles. Machinery and equipment: machine door hatchback, electrical box, toolbox, electronic equipment, clean room equipment, sheet gold industry, financial system equipment. Construction industry: Air pressure support and slow drop of the building air window and smoke exhaust system. Others: Engineers and R & amp; d personnel design and use.

商品型號	行 程 (A)	總 長 (B)	壓力承製範圍(N)
HG-183-1	60	205	訂購氮氣缸時 請告知 所需的壓力(N) 100~700
HG-183-2	80	245	
HG-183-3	100	285	
HG-183-4	100	295	
HG-183-5	120	325	
HG-183-6	125	330	
HG-183-7	140	365	
HG-183-8	148	375	
HG-183-9	165	405	
HG-183-10	177	430	
HG-183-11	180	445	
HG-183-12	185	450	
HG-183-13	200	485	
HG-183-14	210	500	
HG-183-15	225	525	
HG-183-16	250	585	
HG-183-17	275	630	
備註:9.8 牛頓(N)=1公斤(KG)=2.2磅(LBS)			

選配件 [TH-11-1-2]

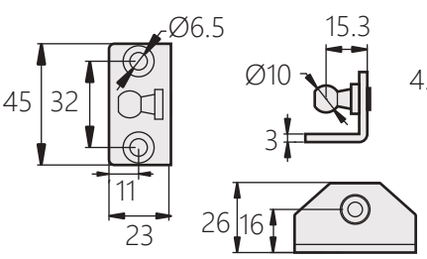

[TH-12]

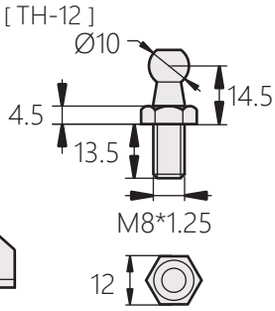

[TH-11-2-2]

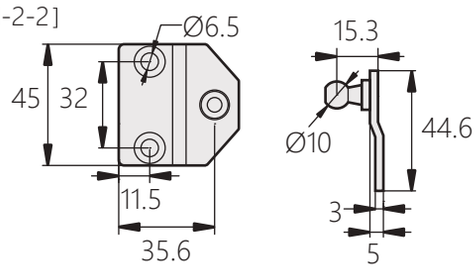

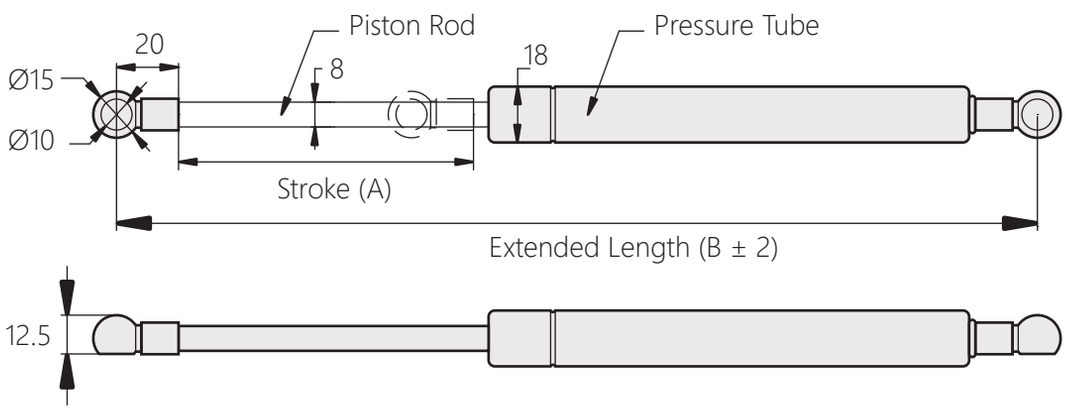

8mm*18mm 氣壓棒/氣壓挺桿

HG-184

8mm*18mm gas pressure bar / pneumatic tappet



商品介紹:

- 材質:氣壓棒主體-碳鋼、選配件-鐵
- 表面處理:黑色塗裝，另有不鏽鋼材質商品
- 備註: 客戶設計使用時，有效行程至少需再預留 5~10mm以上防止撞擊氮氣缸體而造成氮氣缸損壞
- 適用:車輛工業:氣壓支撐汽車引擎蓋、後門、巴士座椅及行旅箱門、側門及特殊重行交通工具。機械設備:機台掀門、電氣箱、工具箱、電子設備、無塵室設備、板金工業、金融系統設備。 建築業:大樓氣窗及排煙系統之氣壓支撐及緩降。 其它:工程師及研發人員設計使用。

Product description:

- Material: Pneumatic rod body-carbon steel, optional-iron
- Surface treatment: Black coating, stainless steel
- Note: When the customer designs and uses, the effective stroke must be reserved at least 5~10mm above to prevent impact of the nitrogen cylinder body caused but the cylinder is damaged
- Uses: Vehicle industry: Pneumatic support car hood, back door, bus seats and travel box doors, side doors and special re-transportation vehicles. Machinery and equipment: machine door hatchback, electrical box, toolbox, electronic equipment, clean room equipment, sheet gold industry, financial system equipment. Construction industry: Air pressure support and slow drop of the building air window and smoke exhaust system. Others: Engineers and R & amp; d personnel design and use.

商品型號	行 程 (A)	總 長 (B)	壓力承製範圍(N)
HG-184-1	60	205	訂購氮氣缸時 請告知 所需的壓力(N) 100~700
HG-184-2	80	245	
HG-184-3	100	285	
HG-184-4	100	295	
HG-184-5	120	325	
HG-184-6	125	330	
HG-184-7	140	365	
HG-184-8	148	375	
HG-184-9	165	405	
HG-184-10	177	430	
HG-184-11	180	445	
HG-184-12	185	450	
HG-184-13	200	485	
HG-184-14	210	500	
HG-184-15	225	525	
HG-184-16	250	585	
HG-184-17	275	630	
備註:9.8 牛頓(N)=1公斤(KG)=2.2磅(LBS)			

選配件

[TH-11-1-1]

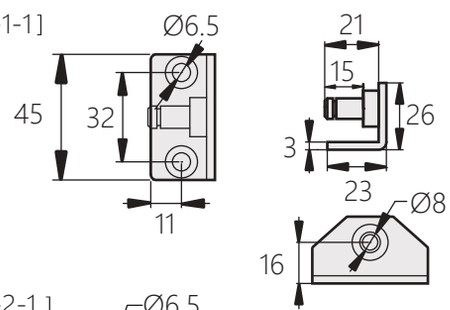

[TH-11-2-1]

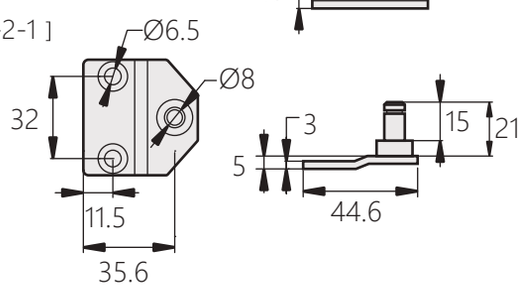

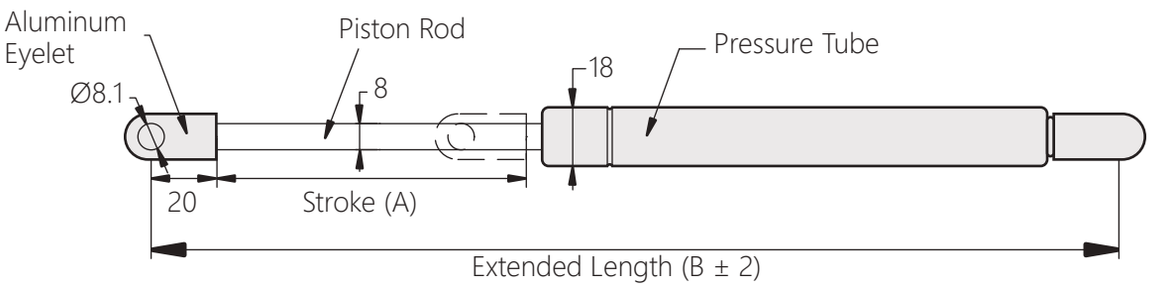

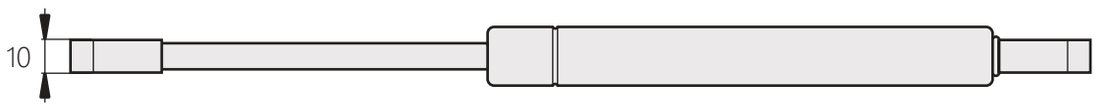

10mm*22mm 氣壓棒/氣壓挺桿

HG-185

10mm*22mm gas pressure bar / pneumatic tappet



商品介紹:

- 材質:氣壓棒主體-碳鋼、選配件-鐵
- 表面處理:黑色塗裝，另有不鏽鋼材質商品
- 備註: 客戶設計使用時，有效行程至少需再預留 5~10mm以上防止撞擊氮氣缸體而造成氮氣缸損壞
- 適用:車輛工業:氣壓支撐汽車引擎蓋、後門、巴士座椅及行旅箱門、側門及特殊重行交通工具。機械設備:機台掀門、電氣箱、工具箱、電子設備、無塵室設備、板金工業、金融系統設備。 建築業:大樓氣窗及排煙系統之氣壓支撐及緩降。 其它:工程師及研發人員設計使用。

商品型號	行 程 (A)	總 長 (B)	壓力 承製範圍(N)
HG-185-1	70	240	訂購氮氣缸時 請告知 所需的壓力(N) 100~1150 N
HG-185-2	90	270	
HG-185-3	100	285	
HG-185-4	125	330	
HG-185-5	150	385	
HG-185-6	160	405	
HG-185-7	180	450	
HG-185-8	200	485	
HG-185-9	210	500	
HG-185-10	220	525	
HG-185-11	250	585	
HG-185-12	280	670	
HG-185-13	300	685	
HG-185-14	300	700	
HG-185-15	330	750	
HG-185-16	350	785	
HG-185-17	370	830	
HG-185-18	400	885	

備註:9.8 牛頓(N)=1公斤(KG)=2.2磅(LBS)

Product description:

- Material: Pneumatic rod body-carbon steel, optional-iron
- Surface treatment: Black coating, stainless steel
- Note: When the customer designs and uses, the effective stroke must be reserved at least 5~10mm above to prevent impact of the nitrogen cylinder body caused but the cylinder is damaged
- Uses: Vehicle industry: Pneumatic support car hood, back door, bus seats and travel box doors, side doors and special re-transportation vehicles. Machinery and equipment: machine door hatchback, electrical box, toolbox, electronic equipment, clean room equipment, sheet gold industry, financial system equipment. Construction industry: Air pressure support and slow drop of the building air window and smoke exhaust system. Others: Engineers and R & amp; d personnel design and use.

選配件

[TH-13]

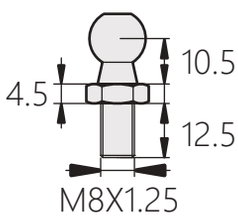



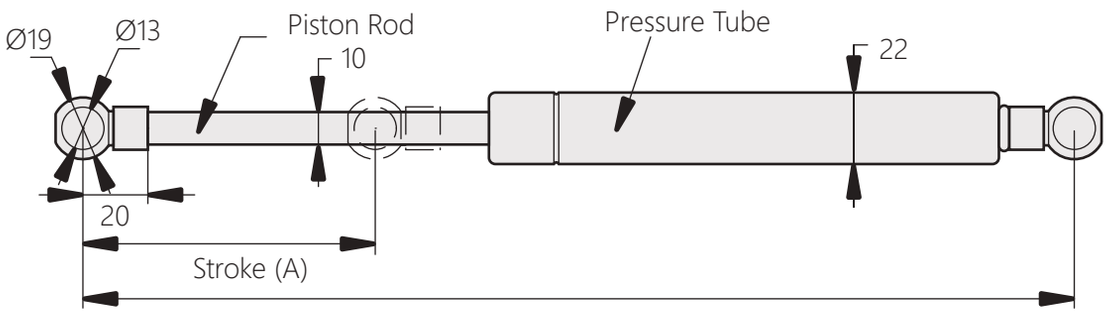

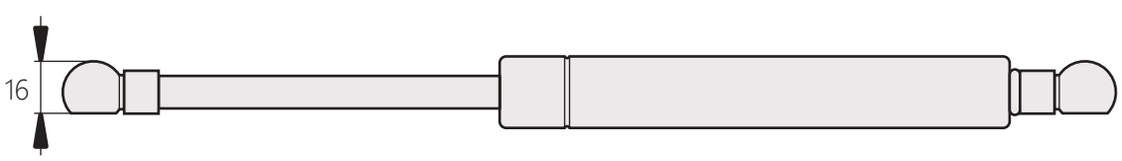

10mm*22mm 氣壓棒/氣壓挺桿

HG-186

10mm*22mm gas pressure bar / pneumatic tappet



商品型號	行 程 (A)	總 長 (B)	壓力 承製範圍(N)
HG-186-1	70	240	訂購氮氣缸時 請告知 所需的壓力(N) 100~1150 N
HG-186-2	90	270	
HG-186-3	100	285	
HG-186-4	125	330	
HG-186-5	150	385	
HG-186-6	160	405	
HG-186-7	180	450	
HG-186-8	200	485	
HG-186-9	210	500	
HG-186-10	220	525	
HG-186-11	250	585	
HG-186-12	280	670	
HG-186-13	300	685	
HG-186-14	300	700	
HG-186-15	330	750	
HG-186-16	350	785	
HG-186-17	370	830	
HG-186-18	400	885	
備註:9.8 牛頓(N)=1公斤(KG)=2.2磅(LBS)			

商品介紹:

- 材質:氣壓棒主體-碳鋼、選配件-鐵
- 表面處理:黑色塗裝，另有不鏽鋼材質商品
- 備註: 客戶設計使用時，有效行程至少需再預留 5~10mm以上防止撞擊氮氣缸體而造成氮氣缸損壞
- 適用:車輛工業:氣壓支撐汽車引擎蓋、後門、巴士座椅及行旅箱門、側門及特殊重行交通工具。機械設備:機台掀門、電氣箱、工具箱、電子設備、無塵室設備、板金工業、金融系統設備。 建築業:大樓氣窗及排煙系統之氣壓支撐及緩降。 其它:工程師及研發人員設計使用。

Product description:

- Material: Pneumatic rod body-carbon steel, optional-iron
- Surface treatment: Black coating, stainless steel
- Note: When the customer designs and uses, the effective stroke must be reserved at least 5~10mm above to prevent impact of the nitrogen cylinder body caused but the cylinder is damaged
- Uses: Vehicle industry: Pneumatic support car hood, back door, bus seats and travel box doors, side doors and special re-transportation vehicles. Machinery and equipment: machine door hatchback, electrical box, toolbox, electronic equipment, clean room equipment, sheet gold industry, financial system equipment. Construction industry: Air pressure support and slow drop of the building air window and smoke exhaust system. Others: Engineers and R & amp; d personnel design and use.

選配件

[TH-11-1-1]

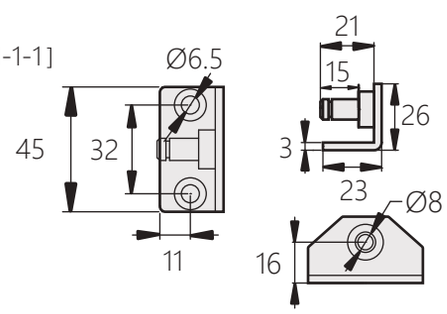

[TH-11-2-1]

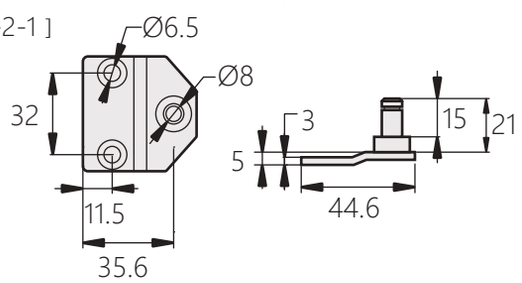

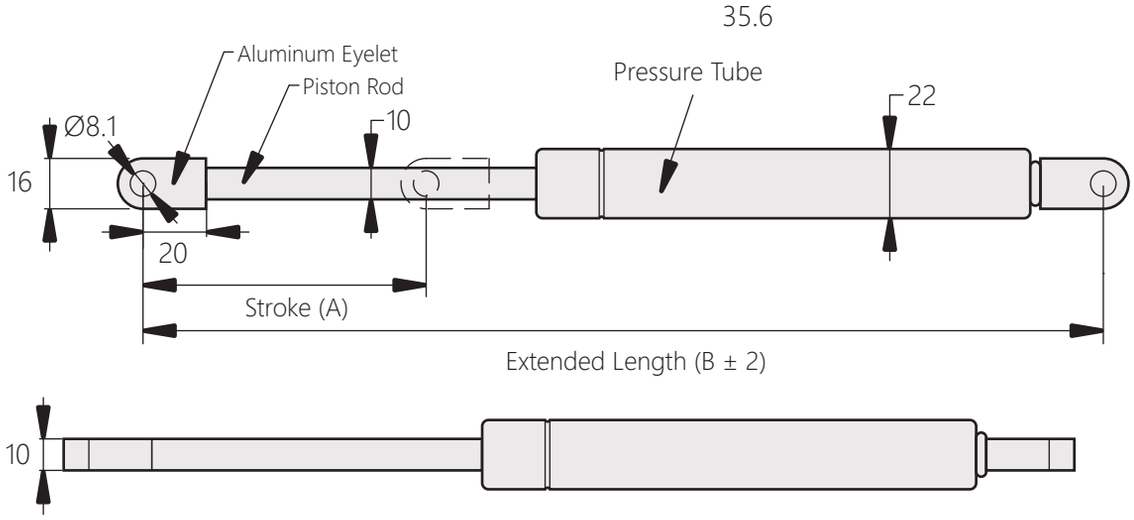

14mm*28mm 氣壓棒/氣壓挺桿

HG-187

14mm*28mm gas pressure bar / pneumatic tappet

CAD



商品介紹:

- 材質:氣壓棒主體-碳鋼、選配件-鐵
- 表面處理:黑色塗裝，另有不鏽鋼材質商品
- 用途:車輛工業:氣壓支撐汽車引擎蓋、後門、巴士座椅及行旅箱門、側門及特殊重行交通工具。機械設備:機台掀門、電氣箱、工具箱、電子設備、無塵室設備、板金工業、金融系統設備。 建築業:大樓氣窗及排煙系統之氣壓支撐及緩降。 其它:工程師及研發人員設計使用
- 備註: 客戶設計使用時，有效行程至少需再預留5~10mm以上防止撞擊氮氣缸體而造成氮氣缸損壞

Product description:

- Material: Pneumatic rod body-carbon steel, optional-iron
- Surface treatment: Black coating, stainless steel
- Uses: Vehicle industry: Pneumatic support car hood, back door, bus seats and travel box doors, side doors and special re-transportation vehicles. Machinery and equipment: machine door hatchback, electrical box, toolbox, electronic equipment, clean room equipment, sheet gold industry, financial system equipment. Construction industry: Air pressure support and slow drop of the building air window and smoke exhaust system. Others: Engineers and R & amp; d personnel design and use.
- Note: When the customer designs and uses, the effective stroke must be reserved at least 5~10mm above to prevent impact of the nitrogen cylinder body caused but the cylinder is damaged

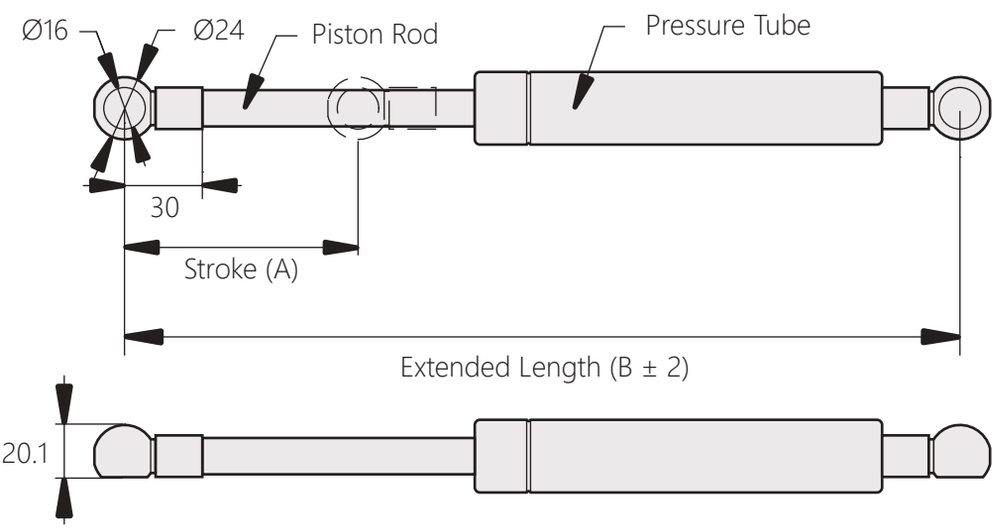

商品型號	行 程 (A)	總 長 (B)	壓力 承製範圍(N)
HG-187-1	100	325	訂購氮氣缸時 請告知 所需的壓力(N) 300 ~ 2500 N
HG-187-2	150	425	
HG-187-3	200	525	
HG-187-4	250	625	
HG-187-5	300	725	
HG-187-6	350	825	
HG-187-7	400	925	
HG-187-8	500	1125	
備註:9.8 牛頓(N)=1公斤(KG)=2.2磅(LBS)			

選配件 [TH-14]

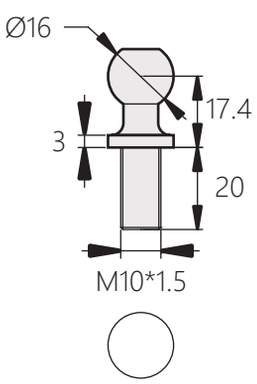

SPRING & Accessories TH
彈簧&配件

SPRING & Accessories TH
彈簧&配件

SPRING & Accessories TH
彈簧&配件

SPRING & Accessories TH
彈簧&配件



蝴蝶式活動 隔板架止

TH-010

Butterfly activity Partition shelf



商品介紹:

- 材質:鋅合金
- 做工精緻，相比傳統角碼，更加美觀
- 用途:衣櫃、櫥櫃、實木訂製家具

Product description:

- Material: Zinc alloy
- Surface treatment: Galvanized
- Note: Wardrobe, cupboard, customized wooden furniture

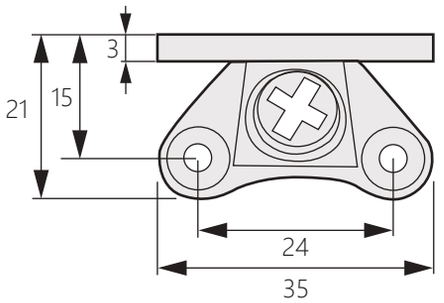

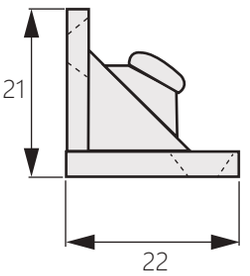

橡膠磁鐵

TH-30

Rubber magnets



商品介紹:

- 含背膠
- 材質:橡膠磁鐵

Product description:

- With adhesive
- Material: Rubber magnet

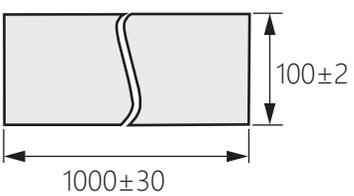

商品型號	材質	長度(m)	T	吸附力(g/cm²)	磁極寬度(mm)
TH-30-1-1	等向性鐵氧體橡膠磁鐵	1	0.4	16	2
TH-30-1-2			0.6	25	2
TH-30-1-3			1	38	2.5
TH-30-1-4			2	54	3
TH-30-1-5			3	56	5
TH-30-2-1	異向性鐵氧體橡膠磁鐵		0.4	25	2.5
TH-30-2-2			0.6	60	3
TH-30-2-3			1	80	3
TH-30-2-4			2	100	5
TH-30-2-5			3	110	5

TH-30-1 : 0.12
TH-30-2 : 0.17

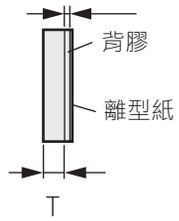

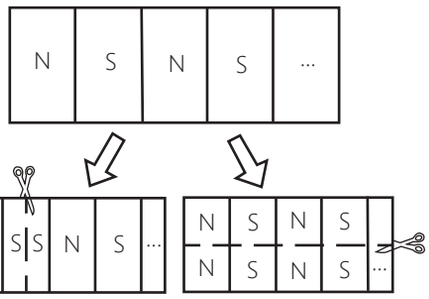

*磁性示意圖(切斷時)

切斷時之磁極如最右邊的圖所示
背膠面無磁力

檢測儀器測試孔蓋

TH-C

Testing instrument test hole cover

商品介紹:

- 三個外徑尺寸規格可供選擇
- 材質：不鏽鋼（SUS304）
- 表面處理：震動拋光
- 用途：檢測設備、試驗箱設備、烤箱等

Product description:

- Choice of three outer diameter sizes
- Material: Stainless steel (SUS304)
- Surface treatment: Vibration polishing
- Uses: Testing equipment, test chamber equipment, oven, etc.



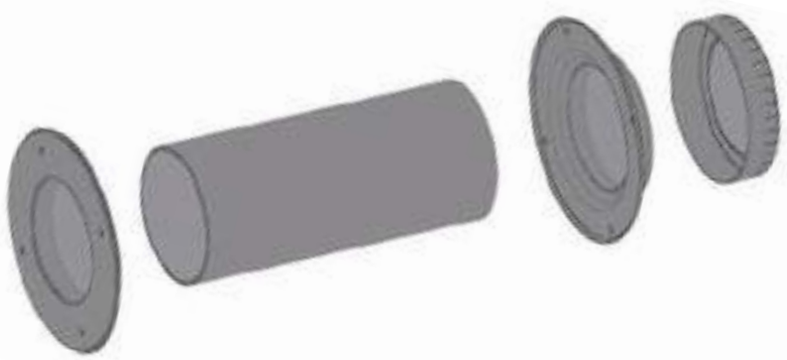

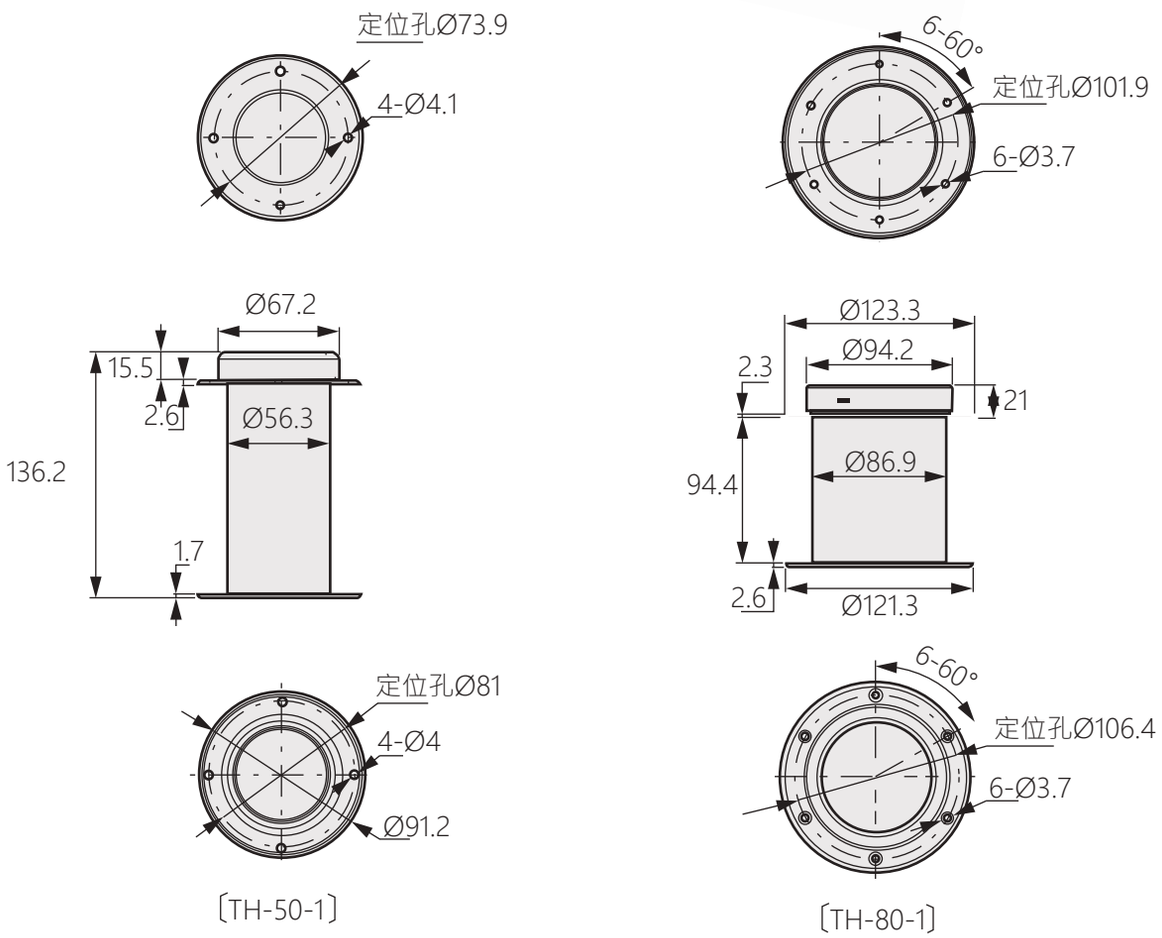

〔TH-50-1〕

〔TH-80-1〕

檢測儀器測試孔蓋

Testing instrument test hole cover

TH-C

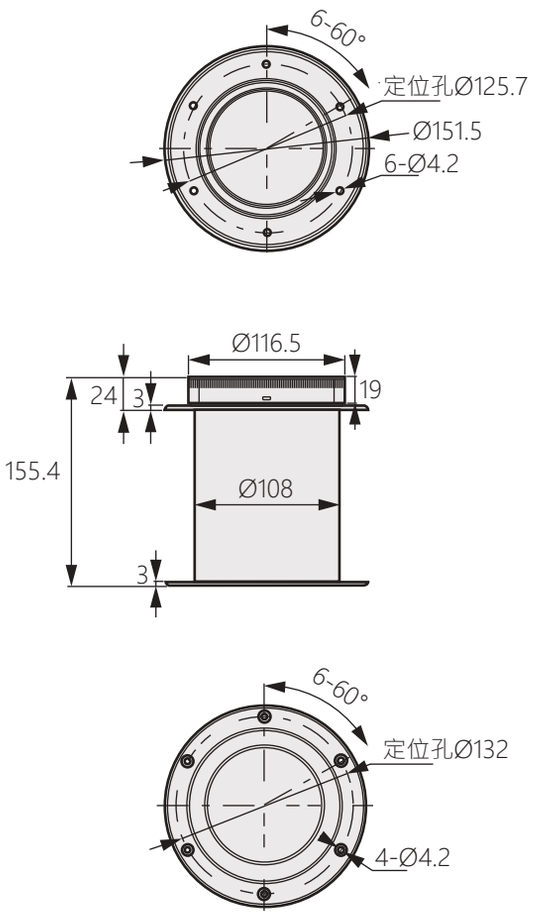

〔TH-100-1〕

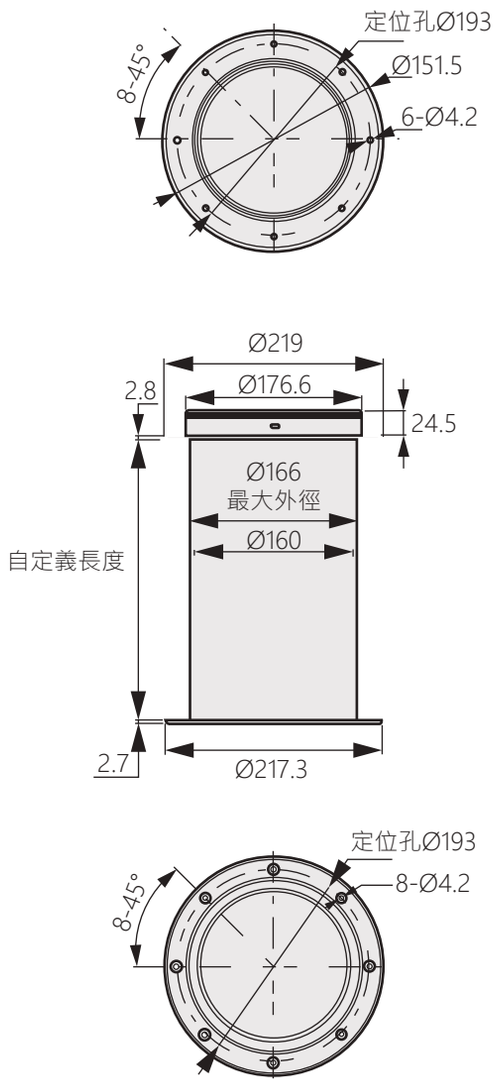

〔TH-160-1〕

商品型號	內徑
TH-50-1	50
TH-80-1	80
TH-100-1	100
TH-160-1	160

Gasket JT
膠條

Gasket JT
膠條

Gasket JT
膠條

Gasket JT
膠條

Gasket JT
膠條

螺母烤漆膠塞 JT-M3-G

Nut baking rubber stopper



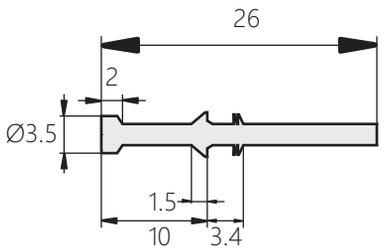

商品介紹:
- 材質:矽膠或硅膠
- 耐高溫:250°

Product description:
- Material: Silicone
- High temperature resistance: 250°

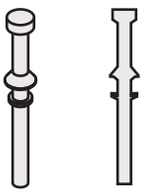

螺母烤漆膠塞 JT-M4-Y

Nut baking rubber stopper



商品介紹:
- 材質:矽膠或硅膠
- 耐高溫:250°

Product desciption:
- Material: Silicone
- High temperature resistance: 250°

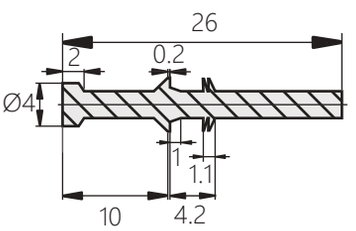

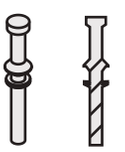

D型防水膠條 JT-M5-Y

D Shape Sealed Gasket



商品介紹:
- 材質:矽膠或硅膠
- 耐高溫:250°

Product description:
- Material: Silicone
- High temperature resistance: 250°

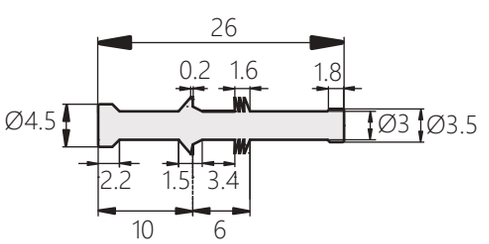



螺母烤漆膠塞

JT-M6-Y

Nut baking rubber stopper



商品介紹:

- 材質:矽膠或硅膠
- 耐高溫:250°

Product description:

- Material: Silicone or silicone
- High temperature resistance: 250°

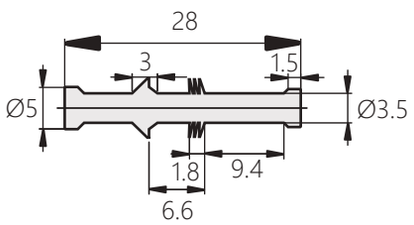



螺母烤漆膠塞

JT-M8-Y

Nut baking rubber stopper



商品介紹:

- 材質:矽膠或硅膠
- 耐高溫:250°

Product desciption:

- Material: Silicone or silicone
- High temperature resistance: 250°

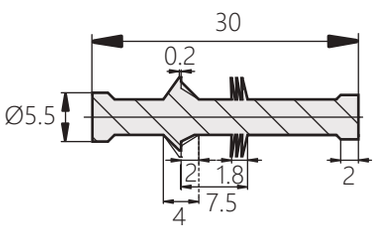



D型防水膠條

JT-002

D Shape Sealed Gasket



商品介紹:

- 能提供良好的壓縮特性、防塵防潮的密封效果，緩解因震動引起的摩擦撞擊聲，並弭補不規則的表面外型
- 材質:橡膠發泡 EPDM、3M背膠

Product description:

- Can provide good compression characteristics, seal out dust/moisture, dampen rattle due to vibration, and compensate for surface contour irregularities
- Material: EPDM、3M adhesive

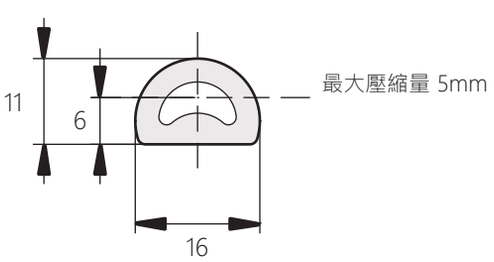

側壓式防水膠條

JT-001

Self-Gripping Sealed Gasket



商品介紹:

- 能提供良好的壓縮特性、防塵防潮的密封效果，緩解因震動引起的摩擦撞擊聲，並弭補不規則的表面外型
- 材質:橡膠、金屬夾板

Product description:

- Can provide good compression characteristics, seal out dust/moisture, dampen rattle due to vibration, and compensate for surface contour irregularities
- Material: Rubber、SPCC

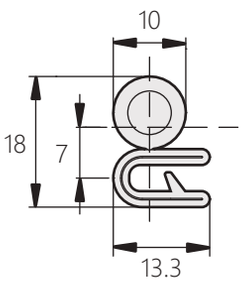

最大壓縮量 6.5mm
適用板厚: 1.2-3mm

安裝示意圖





D型防水膠條

JT-064

D Shape Sealed Gasket



[JT-064-1]



[JT-064-2]

商品介紹:

- 採用天然橡膠材質，柔性好，抗老化性強
- 適彈簧伸展式設計，延展性優越
- 兩種內徑規格可選
- 表面處理:黑色
- 材質:天然橡膠
- 用途:高低溫實驗箱、恆溫恆濕試驗箱等
- 備註:穿線時將軟管壓縮後更容易穿過

Product description:

- Made of natural rubber material, good flexibility and strong anti-aging
- Suitable for spring extension design, excellent ductility
- Two internal diameter specifications are available
- Surface treatment : Black
- Material: Natural rubber
- Uses: High and low temperature test chamber, constant temperature and humidity test chamber, etc
- Note: It is easier to pass through the hose after threading

自然狀態:L1 拉伸狀態:L2

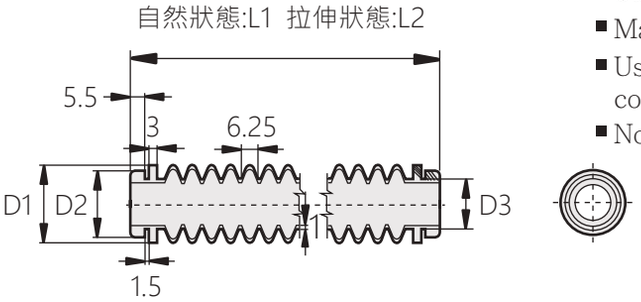

商品型號	L1	L2	D1	D2	D3	D4
JT-064-1	230	330	29.5	25.5	18	19
JT-064-2	170	270	26	22	14.5	16

安裝示意圖

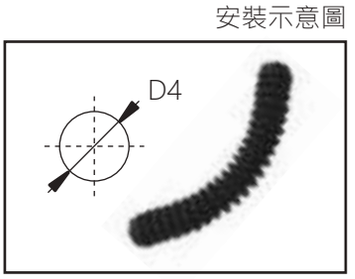

密封膠條 JT-009

seal



商品介紹:

- 耐溫:-20°C~+100°C
- 適用板厚:1~2mm
- 材質:EPDM橡膠

Product description:

- Temperature resistance: -20°C~+100°C
- Applicable board thickness: 1~2mm
- Material: EPDM rubber

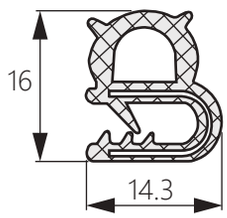

密封膠條 JT-050

seal



商品介紹:

- 耐溫:-10°C~+70°C
- 材質:EPDM橡膠

Product description:

- Temperature resistance: -10°C~+70°C
- Material: EPDM rubber

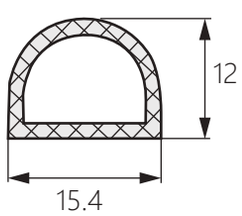

密封膠條 JT-048

seal



商品介紹:

- 耐溫:-10°C~+70°C
- 材質:EPDM橡膠

Product description:

- Temperature resistance: -10°C~+70°C
- Material: EPDM rubber

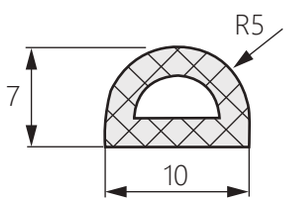

正壓式防水密封膠條

JT-201

Self-Gripping Sealed Gasket



商品介紹:

- 能提供良好的壓縮特性、防塵防潮的密封效果，緩解因震動引起的摩擦撞擊聲，並弭補不規則的表面外型
- 耐侯溫度:-40°C～130°C
- 施工壓入力:6kgf/100mm、脫落力:6kgf/100mm
- 材質:軟質EPDM、冷軋鋼板

Product description:

- Can provide good compression characteristics, seal out dust/moisture, dampen rattle due to vibration, and compensate for surface contour irregularities.
- Temperature: It works properly between -40°C and 130°C
- Insert capacity: Under 6kgf/100mm. Sustaining capacity: Above 6kgf/100mm.
- Material: EPDM (soft quality)-black ; SPCC

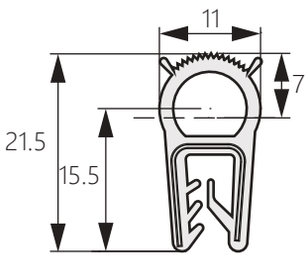

最大壓縮量 : 7mm

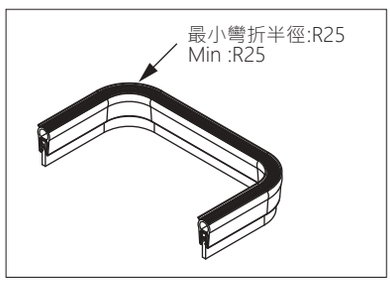

D型防水膠條

JT-202

D Shape Sealed Gasket



商品介紹:

- 能提供良好的壓縮特性、防塵防潮的密封效果，緩解因震動引起的摩擦撞擊聲，並弭補不規則的表面外型
- 材質:軟質EPDM、冷軋鋼板
- 耐侯溫度:-40°C～130°C
- 施工壓入力:6kgf/100mm、脫落力:6kgf/100mm

Product description:

- Can provide good compression characteristics, seal out dust/moisture, dampen rattle due to vibration, and compensate for surface contour irregularities.
- Material: EPDM (soft quality)-black ; SPCC
- Temperature: It works properly between -40°C and 130°C.
- Surface treatment : Black
- Insert capacity: Under 6kgf/100mm. Sustaining capacity:Above 6kgf/100mm.

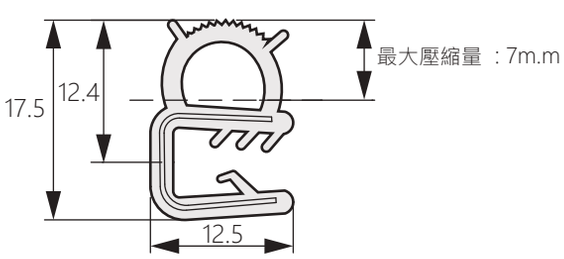

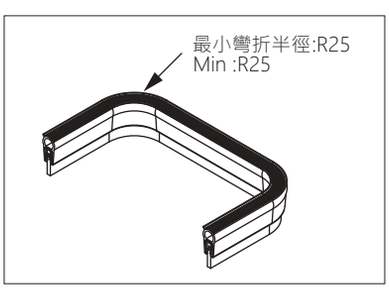

Studs&Nuts&Screws（knurled） LZ
螺柱&螺絲

Studs&Nuts&Screws（knurled） LZ
螺柱&螺絲

Studs&Nuts&Screws（kuurled） LZ
螺柱&螺絲

Studs&Nuts&Scrows（knurl
螺柱&螺絲

Studs&Nuts&Screws(knurled) LZ
螺柱&螺絲



通孔和盲孔栓式螺母

Through and blind hole bolt nuts

LZ-91

RoHS SUS不鏽鋼 CAD



商品介紹:
- ■彈簧彈起設計
- ■滾花把手提供堅實把握
- ■擰緊到外螺紋螺栓上
- ■有助於快速更換面板
- ■材質:鋁、硬化鋼、302不鏽鋼
- ■表面處理:本色、鍍鋅、鉻酸鹽加保護層、鈍化

Product description:
- ■Spring-up design
- ■Knurled handles provide solid grip
- ■Tighten to externally threaded bolts
- ■Helps quickly replace panels
- ■Material: Aluminum, hardened steel, 302 stainless steel
- ■Surface treatment: Natural color, zinc plating, chromate plus protective layer, passivation

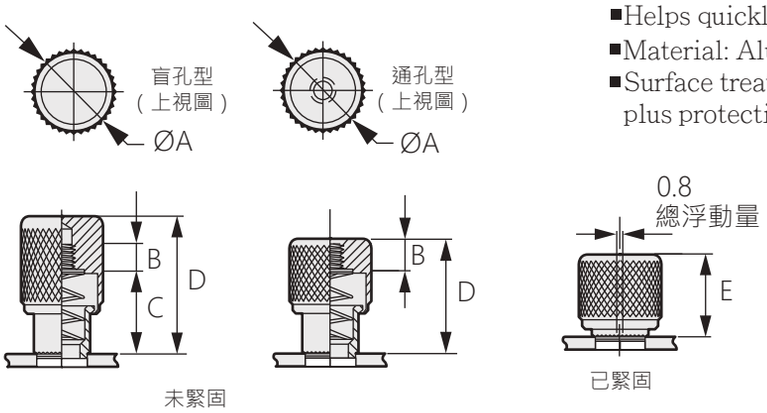

螺紋尺寸	P Min	P Max
M3	7.1	9.5
M4	10	12.1
M5	10.2	12.2
M6	12.4	16.7
4-40	7.3	9.4
6-32	9.9	13.1
8-32	10.1	13.3
10-32	10.3	13.5
1/4-20	13	16.5

*用於硬度為RB85或更小的材料,例如一半硬度或更軟的低碳鋼,在退火條件下的不鏽鋼和鋁

*建議從面板邊緣智孔中心線的最小距離為1.5*ØH

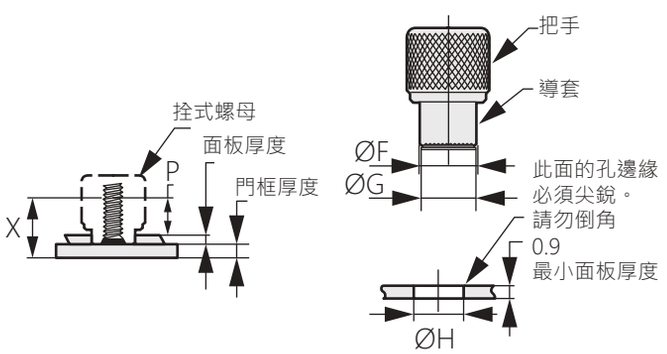

安裝說明
- ■在面板上預先打孔
- ■在面板後面提供一個堅實的支撐表面
- ■將組件按壓到面板內，直至只有導套上的
- ■滾花頂部可見為止

應用於盲孔的螺紋插入選擇
- ■門框厚度+面板厚度+P最小=X最小
- ■門框厚度+面板厚度+P最大=X最大
- ■螺紋插入長度(L):X最小<”L”>X最大
- ■大於X最大的L值必須使用通孔型
- ■如果使用焊接螺栓,在計算中忽略門框厚度(請參閱表格和左側的圖表)

商品型號		螺紋尺寸	把手類型	ØA	B	C	D	E	ØF	ØG	ØH
公制	英吋		最小								
本色	本色										
02-10	52-10	M3或4-40	通孔	10.6	3.6	~	12.8	9.3	6.4	5.5	5.6±0.04
02-11	52-11		盲孔		4	9.2	16.8	13.3			
~	62-10	6-32UNC	通孔	11.4	4.7	~	17.7	12.5	7.1	6.3	6.4+0.03 -0.05
~	62-11		盲孔		5.4	13	23	17.9			
22-10	72-10	M4或8-32	通孔	13	4.5	~	17.7	12.5	8.7	7.9	8+0 -0.08
22-11	72-11		盲孔		5.4	13.2	23	17.9			
32-10	82-10	M5或10-32	通孔		4.5	~	17.7	12.5	9		
32-11	82-11		盲孔		5.4		23	17.9			
42-10	92-10	M6或1/4-20	通孔	14.6	6.4	~	22.8	16	10	9.4	9.5+0.1 -0
42-11	92-11		盲孔		7	16.4	29.5	23			

*如需訂購請以完整型號，例如:LZ-91-02-10-M3

彩色栓式螺釘

Colorful Captive Screws

LZ-93



商品介紹:

- 用顏色標示開啟處
- 配合您工業設計的拴式螺釘顏色
- 適用於高扭矩螺絲刀的高強度螺釘
- 有助於快速更換面板
- 提供滾花頭和把手
- 材質:把手PC/ABS,螺釘;硬化碳鋼,鍍鋅,鉻酸鹽加保護層 彈簧:300系列不鏽鋼,鈍化
- 備註:壓入式最大面板硬度170HV

Product description:

- Protective layerSpring: 300 series stainless steel, passivated
- Color the openings
- Match the color of your industrial design bolts
- High-strength screws for high-torque screwdrivers
- Knurled head and handle provided
- Material: Handle PC / ABS, screw; hardened carbon steel, galvanized, chromate plus
- Note: Press-in type maximum panel hardness 170HV

M3&4-40

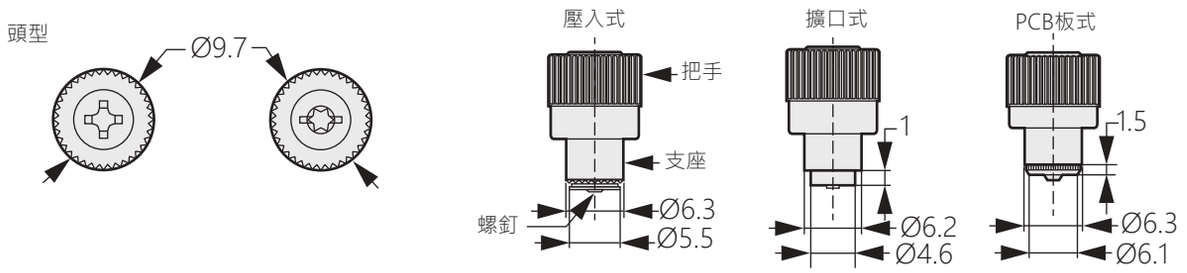

M3

商品型號		安裝方式	H-1	H-2	A min	A max	B	P-1	P-2	F*	ØD	ØZ
十字頭	TORX®/一字頭組合											
PH-M3-1PO	TS-M3-1PO	壓入式	11.5	8.6	0.9	~	~	0.8	3.7	0.7	5.6±0.04	3.2+0.2 -0.1
PH-M3-2PO	TS-M3-2PO							2.5	5.4			
PH-M3-1BO	TS -M3-1BO	PCB板式	10.9	8.5	1.6	~	~	1.5	3.8		5.6+0.1 -0.05	3.2+0.2 -0.1
PH-M3-1F1	TS -M3-1F1	擴口式	11.5	8.6	0.8	1.5	0.4	0.8	3.7		4.8+0.0 8 -0.05	3.2+0.2 -0.1
PH-M3-2F1	TS-M3-2F1							1.5	5.4			

4-40

商品型號		安裝方式	H-1	H-2	A min	A max	B	P-1	P-2	F*	ØD	ØZ
十字頭	TORX®/一字頭組合											
PH-04-1PO	TS-04-1PO	壓入式	11.5	8.6	0.9	~	~	0.8	3.7	0.7	5.6±0.04	3.2+0.2 -0.1
PH-04-2PO	TS-04-2PO							2.5	5.4			
PH-04-1BO	TS-04-1BO	PCB板式	10.9	8.5	1.6	~	~	1.5	3.8		5.6+0.1 -0.05	3.2+0.2 -0.1
PH-04-2BO	TS-04-2BO							3.3	5.5			
PH-04-1F1	TS-04-1F1	擴口式	11.5	8.6	0.8	1.5	0.4	0.8	3.7		4.8+0.0 8 -0.05	3.0+0.2 -0.1
PH-04-2F1	TS-04-2F1							1.5	5.4			

彩色栓式螺釘

Colorful Captive Screws

LZ-93

RoHS SUS不鏽鋼 CAD

M4和M5&10-32

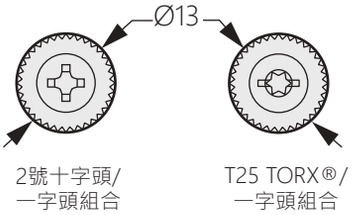

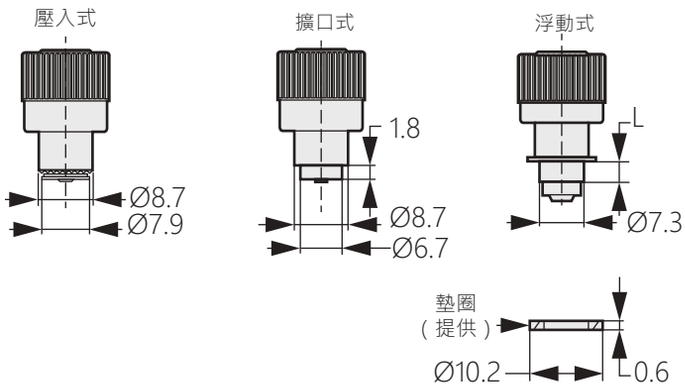

M4

商品型號		安裝方式	H-1	H-2	A min	A max	B	L	P-1	P-2	F*	ØD	ØZ
十字頭/一字組合	TORX®/一字頭組合												
PS-M4-1PO	TS-M4-1PO	壓入式	16.3	11.3	0.9	~	~	~	0.5	5.6	0.7	8+0 -0.08	4.4+0.2 -0.1
PS-M4-2PO	TS-M4-2PO								2	7.1			
PS-M4-1F1	TS -M4-1F1	擴口式			1.5	3.2	0.4		0.6	5.6	0.6	6.8+0.08 -0.04	4.2+0.05 -0
PS-M4-2F1	TS-M4-2F1								2.1	7.1			
PS-M4-3T2	TS -M4-3T2	浮動式	16.2	11.2	0.8	1.6	3.1	4	3.8	8.8	2.3	8.8+0.08 -0.03	~
PS-M4-4T2	TS-M4-4T2								5.4	10.4			
PS-M4-3T3	TS-M4-3T3				1.6	2.4	3.9	4.8	3.8	8.8			
PS-M4-4T3	TS-M4-4T3								5.4	10.4			

M5

商品型號		安裝方式	H-1	H-2	A min	A max	B	L	P-1	P-2	F*	ØD	ØZ
十字頭/一字組合	TORX®/一字頭組合												
PS-M5-1PO	TS-M5-1PO	壓入式	16.4	11.3	0.9	~	~	~	0.4	5.6	0.8	8+0 -0.08	5.2+0.2 -0.1
PS-M5-2PO	TS-M5-2PO								2	7.2			
PS-M5-1F1	TS -M5-1F1	擴口式			1.5	3.2	0.4		0.5	5.6	0.7	6.8+0.08 -0.04	4.9+0.05 -0
PS-M5-2F1	TS-M5-2F1								2.1	7.2			
PS-M5-3T2	TS -M5-3T2	浮動式	16.3	11.2	0.8	1.6	3.1	4	3.7	8.9	2.3	8.8+0.08 -0.03	~
PS-M5-4T2	TS-M5-4T2								5.3	10.5			

10-32

商品型號		安裝方式	H-1	H-2	A min	A max	B	L	P-1	P-2	F*	ØD	ØZ
十字頭/一字組合	TORX®/一字頭組合												
PS-10-1PO	TS-10-1PO	壓入式	16.3	11.3	0.9	~	~	~	0.5	5.6	0.6	8+0 -0.08	5.2+0.2 -0.1
PS-10-2PO	TS-10-2PO								2	7.1			
PS-10-1F1	TS -10-1F1	擴口式			1.5	3.2	0.4	1.8	0.6	5.6		6.8+0.08 -0.04	4.9+0.05 -0
PS-10-2F1	TS-10-2F1								2.1	7.1			
PS-10-3T2	TS -10-3T2	浮動式		11.2	0.8	1.6	3.1	4	3.8	8.8	2.3	8.8+0.08 -0.03	~
PS-10-4T2	TS-10-4T2								5.4	10.4			
PS-10-3T3	TS-10-3T3				1.6	2.4	3.9	4.8	3.8	8.8			
PS-10-4T3	TS-10-4T3								5.4	10.4			

彩色栓式螺釘

Colorful Captive Screws

LZ-93

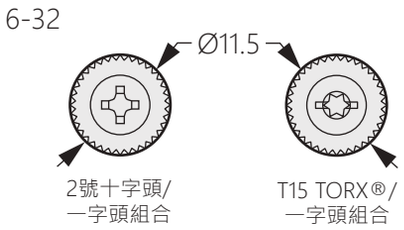

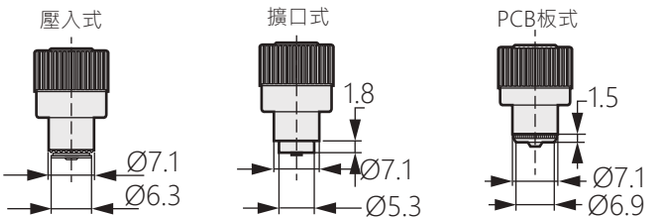

商品型號		安裝方式	H-1	H-2	A min	A max	B	P-1	P-2	F*	ØD	ØZ
十字頭/一字組合	TORX®/一字頭組合											
PS-06-1PO	TS-06-1PO	壓入式	15.5	11.3	0.9	~	~	0.7	5	0.7	6.4+0.03 -0.05	3.7+0.2 -0.1
PS-06-2PO	TS-06-2PO							2.3	6.6			
PS-06-1BO	TS -06-1BO	PCB板式	14.5	10	1.5	~	~	1.7	6.2		6.4±0.1	
PS-06-1F1	TS -06-1F1	擴口式	15.5	11.3		3.2	0.4	0.8	5		5.4+0.1 -0	
PS-06-2F1	TS-06-2F1							2.3	6.6			

*顏色的選擇,請更改零件號的最後三位數字,款式的選擇,K=滾花,N=平滑,
例如:LZ-93-PS-06-1PO-K000黑色,滾花LZ-93-PS-06-1PO-N013紅色,平滑
*F表示在未緊固位置的最大浮動量
*如需訂購請以完整型號，例如:LZ-93-PH-M3-1PO-K000

把手高度和螺釘突出

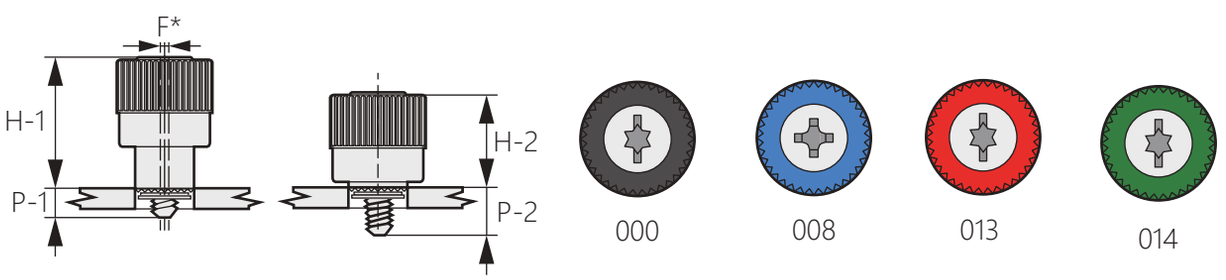

導套材料與表面處理

- 壓入式
  硬化碳鋼,鍍鋅,鉻酸鹽加保護套
- 擴口式、浮動式
  鋁,本色
- PCB板式
  不鏽鋼

附磁鐵六角螺栓

Hexagon bolts with magnts

LZ-15



商品介紹:

■材質:標準型LZ-15-1-1: SUM24L、鈷磁鐵、黃銅,
LZ-15-1-2: SUM24L、釹磁鐵、黃銅、SUS430,
LZ-15-1-3: SUM24L、耐熱釹磁鐵、黃銅,
蓋型LZ-15-2: SUM24L、釹磁鐵、SUS430,
淬火型LZ-15-3:S45C、釹磁鐵、黃銅,
低頭型LZ-15-4: SUM24L、釹磁鐵、SUS430,
低頭內六角孔型LZ-15-5: SUM24L、釹磁鐵、SUS430,
低頭小徑型LZ-15-6: SUM24L、釹磁鐵、SUS430,
低頭小徑內六角孔型LZ-15-7: SUM24L、釹磁鐵、SUS430

■表面處理:鍍鎳

■備註:完整訂購型號LZ-15-1-1-M-L,例如:LZ-15-1-1-3-10

Product description:

■Material: Standard LZ-15-1-1: SUM24L, cobalt magnet, brass,LZ-15-1-2: SUM24L, neodymium magnet, brass, SUS430,LZ-15-1-3: SUM24L, heat-resistant neodymium magnet, brass,
Cover type LZ-15-2: SUM24L, neodymium magnet, SUS430,
Quenching type LZ-15-3: S45C, neodymium magnet, brass,Low head type LZ-15-4: SUM24L, neodymium magnet, SUS430,
Low head hexagon socket type LZ-15-5: SUM24L, neodymium magnet, SUS430,
Low head small diameter type LZ-15-6: SUM24L, neodymium magnet, SUS430,
Low head small diameter hexagon socket type LZ-15-7: SUM24L, neodymium magnet,SUS430

■Surface treatment: Nickel plating

■Note: Complete order model LZ-15-1-1-M-L,
Ex: LZ-15-1-1-3-10

標準型 LZ-15-1-1
LZ-15-1-2
LZ-15-1-3

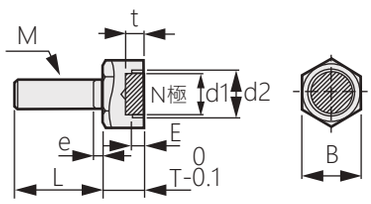

蓋型 LZ-15-2

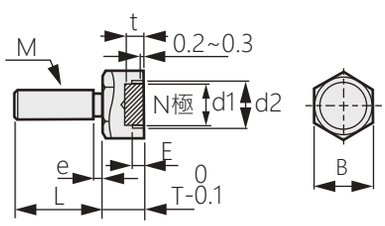

淬火型 LZ-15-3

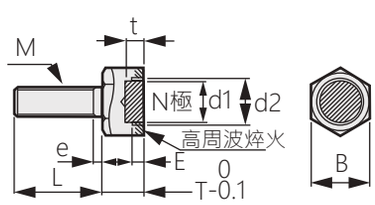

低頭內六角孔型 LZ-15-5
低頭小徑內六角孔型 LZ-15-7

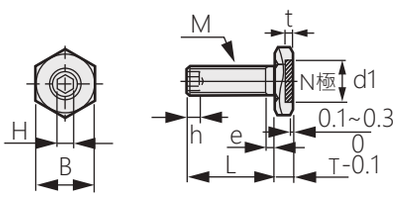

低頭型 LZ-15-4
低頭小徑型 LZ-15-6

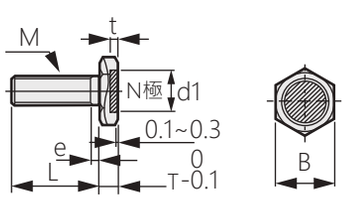

加工適用表

M	標準型			蓋型	淬火型	低頭型	低頭內六角孔型	低頭小徑型	低頭小徑內六角孔型
	LZ-15-1-1	LZ-15-1-2	LZ-15-1-3	LZ-15-2	LZ-15-3	LZ-15-4	LZ-15-5	LZ-15-6	LZ-15-7
3	●	●	-	-	-	-	-	-	-
4	●	●	●	●	●	●	●	●	●
5	●	●	●	●	●	●	●	●	●
6	●	●	●	●	●	●	●	●	●
8	●	●	-	●	●	●	●	-	-
10	●	●	-	-	-	●	●	-	-

使用範例

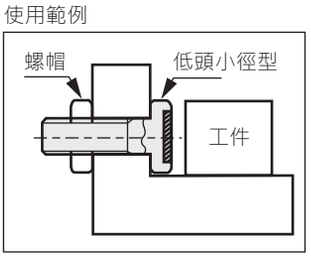

*最適合安裝於空間狹窄處

商品型號	型式	M	L	B	T	e	d1	d2	t	E	H	h	吸附力N{kgf}		表面磁束密度高斯[G]		耐熱溫度
													鈷磁鐵	釹磁鐵 耐熱釹磁鐵	鈷磁鐵	釹磁鐵 耐熱釹磁鐵	
LZ-15-1-1	標準型	3	10	7	5	1.2	4	5	2	2	-	-	2.9{0.3}	3.9{0.4}	2100~2600	2700~3000	80°C
		4	10 15	8	6	1.5	5	6					3.9{0.4}	6.8{0.7}	2500~2900	3000~3500	
		5	10 15 20	10	7	2	7	8	3				10.8{1.1}	16.7{1.7}	2700~2900	3600~3900	
		6	15 20 25	13			9.5	11	4	3			27.5{2.8}	39.2{4.0}	2800~3100	3800~4200	
		8	15 20 25	17	9	3	12.5	14					47.1{4.8}	83.4{8.5}	2900~3300		
		10	20 25	21			16.5	18	6	5			88.3{9.0}	140.2{14.3}	2900~3400	4000~4400	
LZ-15-1-2		3	10	7	5	1.2	4	5	2	2	-	-	2.9{0.3}	3.9{0.4}	2100~2600	2700~3000	
		4	10 15	8	6	1.5	5	6					3.9{0.4}	6.8{0.7}	2500~2900	3000~3500	
		5	10 15 20	10	7	2	7	8	3				10.8{1.1}	16.7{1.7}	2700~2900	3600~3900	
		6	15 20 25	13			9.5	11	4	3			27.5{2.8}	39.2{4.0}	2800~3100	3800~4200	
		8	15 20 25	17	9	3	12.5	14					47.1{4.8}	83.4{8.5}	2900~3300		
		10	20 25	21			16.5	18	6	5			88.3{9.0}	140.2{14.3}	2900~3400	4000~4400	
LZ-15-1-3		4	10	8	6	1.5	5	6	2	2	-	-	-	6.8{0.7}	-	3000~3500	150°C
		5	10	10	7	2	7	8	3					16.7{1.7}		3600~3900	
		6	20	13			9.5	11	4	3				39.2{4.0}		3800~4200	
LZ-15-2	蓋型	4	10	8	6	1.5	5	6	2	2	-	-	-	4.0{0.4}	-	3000~3200	80°C
		5	10	10	7	2	7	8	3					10.0{1.0}		3100~3300	
		6	20	13			9.5	11	4	3				23.5{2.4}			
		8	20	17	9	3	12.5	14						50.1{5.1}		3500~3700	
LZ-15-3	淬火型	4	10	8	6	1.5	5	6	2	2	-	-	-	6.8{0.7}	-	3000~3500	
		5	10 15	10	7	2	7 9.5	8	3					16.7{1.7}		3600~3900	
		6	15 20	13				11	4	3				39.2{4.0}		3800~4200	
		8	20	17	9	3	12.5	14						83.4{8.5}			
LZ-15-4	低頭型	4	10	14	3	1	10	-	1	-	2	2.2	-	32.1{3.3}	-	1700~1900	
		5	10 15 20	17		2	12.5				2.5	2.8		49.0{5.0}		2400~2600	
		6	15 20 25	19	3.5		14.5		1.5		3	3		78.4{8.0}		2600~2800	
		8	15 20 25 30	21	4	3	16.5				4	4		117.7{12.0}			
		10	20 25 30 35	24	5		18.5		2		5	5		176.5{18.0}		2800~3000	

商品型號	型式	M	L	B	T	e	d1	d2	t	E	H	h	吸附力N{kgf}		表面磁束密度高斯[G]		耐熱溫度
													鈷磁鐵	釹磁鐵 耐熱釹磁鐵	鈷磁鐵	釹磁鐵 耐熱釹磁鐵	
LZ-15-5	低頭 內六角孔型	4	10	14	3	1	10	-	1	-	2	2.2	-	32.1{3.3}	-	1700~1900	80°C
		5	10	17		2	12.5				2.5	2.8		49.0{5.0}		2400~2600	
			15														
			20														
		6	15	19	3.5		14.5		1.5		3	3		78.4{8.0}		2600~2800	
			20														
			25														
		8	30	21	4	3	16.5				4	4		117.7{12.0}			
		10	20	24	5		18.5		2		5	5		176.5{18.0}		2800~3000	
LZ-15-6	低頭小徑型	4	10	8	3	1	5	-	1	-	2	2.2	-	3.6{0.4}	-	2000~2200	
		5	10	10		1.5	7		1.5		2.5	2.8		10.2{1.1}		2500~2700	
			15														
		6	15	13	3.5	2	9.5				3	3		25.6{2.6}		2300~2500	
			20														
LZ-15-7	低頭小徑 內六角孔型	4	10	8	3	1	5	-	1	-	2	2.2	-	3.6{0.4}	-	2000~2200	
		5	10	10		1.5	7		1.5		2.5	2.8		10.2{1.1}		2500~2700	
			15														
		6	15	13	3.5	2	9.5				3	3		25.6{2.6}		2300~2500	
			20														

附壓力膠磁鐵螺絲 LZ-010

Magnets protected with urethane



商品介紹:
- ■能防止工件損傷與噪音
- ■備註:訂購完整型號LZ-010-1-1-硬度,例如:LZ-010-1-1-A90

Product description:
- ■Can prevent workpiece damage and noise
- ■Note: Order the complete model LZ-010-1-1-hardness, Ex: LZ-010-1-1-A90

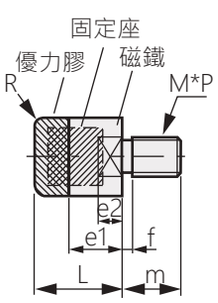

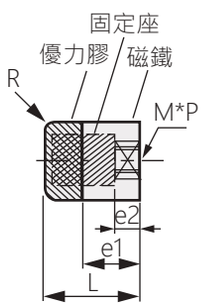

商品型號		固定座	優力膠		磁鐵	耐熱溫度
外螺牙	內螺牙	材質	材質	硬度	材質	
LZ-010-1	LZ-010-2	SUS304	醚系優力膠	蕭氏硬度A90 蕭氏硬度A70	釹磁鐵	80°C

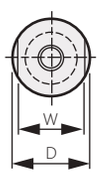

商品型號	型式	D	M*P(粗螺紋)	L	e1	e2	f	W	m	R	吸附力N{kgf}	表面磁通密度高斯[G]
LZ-010-1-1	外螺牙	10	M5*0.8	16	10	4	1	8	7	1	4.0{0.40}	3000~3200
LZ-010-1-2		12	M6*1.0				2	10	10	2	6.5{0.66}	2900~3100
LZ-010-1-3		16	M8*1.25	18	11	5		14	12		8.0{0.81}	2700~2900
LZ-010-1-4		20	M10*1.5	20	13	6		17	14	3	17.7{1.8}	2600~2800
LZ-010-1-5		25	M10*1.5	22	15	8		22			35.0{3.56}	2900~3100
LZ-010-2-1	內螺牙	10	M4*0.7	15	9	4		8		1	4.0{0.40}	3000~3200
LZ-010-2-2		12	M4*0.7					10		2	6.5{0.66}	2900~3100
LZ-010-2-3		16	M5*0.8	17	10	5		14			8.0{0.81}	2700~2900
LZ-010-2-4		20	M5*0.8					17		3	17.7{1.8}	2600~2800
LZ-010-2-5		25	M6*1.0	18	11	6		22			35.0{3.56}	2900~3100

*吸附力、表面磁通密度為參考值

星型旋鈕

Star knob

LZ-1012



商品介紹:

- 材質:旋鈕-尼龍加玻璃纖維,蓋子-塑膠
- 表面處理:旋鈕-黑色,蓋子-橘色

Product description:

- Material: Knob-nylon plus fiberglass, lid-plastic
- Surface treatment: Knob-black, cover-orange

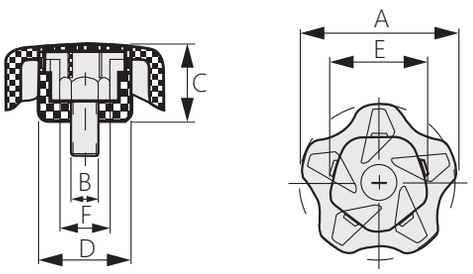

商品型號	A	B	C	D	E	F
LZ-1012-1	34	M6	16	21	17	10
LZ-1012-2	38	M8	18	21	17	13
LZ-1012-3	43	M10	21	25	22	17
LZ-1012-4	53	M12	22	28	24	19

可旋式精密星型中空起子

Rotatable precision star hollow screwdriver

LZ-53



商品介紹:

- 強力握把設計，符合人體工學，握感舒適
- 精密星型中空起子，扭力特強
- 柄身為PA(Nylon)+TPR雙色結構設計，耐天候，耐酸鹼
- 柄頭以大型迴轉座設計，可360°旋轉
- 前端特殊加硬染黑處理，不易滑牙，附磁性
- 材質:專業級的鉻釩鋼
- 用途:通訊、電腦、汽車電機、事務機器等

Product description:

- Powerful grip design, ergonomic and comfortable grip
- Precision star hollow screwdriver, strong torque
- The handle body is designed with PA (Nylon) + TPR two-color structure, weather resistant, acid and alkali resistant
- The crown is designed with a large swivel seat and can be rotated 360 °
- The front end is specially hardened and blackened, not easy to slip, and magnetic
- Material: Professional grade chrome vanadium steel
- Uses: Communications, computers, automotive motors, business machines, etc.

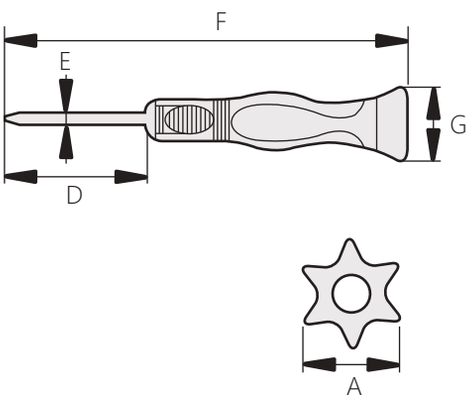

商品型號	規格(D)	總長(F)	A	E	G
LZ-53-1	T7H*50mm	158mm	1.4	3	19
LZ-53-2	T8H*50mm		1.7		
LZ-53-3	T9H*50mm		2.0	4	
LZ-53-4	T10H*50mm		2.3		

星型旋鈕螺帽

Star knob nut

LZ-1020



商品介紹:

- 快速固定面板
- 材質:旋鈕-尼龍玻璃纖維
  螺栓-鋼鐵

Product description:

- Quickly fastens panel to externally threaded studs
- Material: Knob-nylon fiberglass
  Bolt-steel

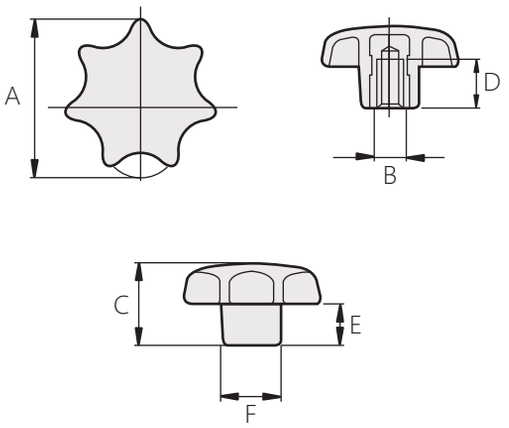

商品型號	A	B	C	D	E	F
LZ-1020-1	20	M4	13	6.5	7	10
LZ-1020-2	25	M5	16	9.5	8	12
LZ-1020-3	25	M6	16	9.5	8	12
LZ-1020-4	32	M6	20	12	10	14
LZ-1020-5	40	M6	25	14	13	18
LZ-1020-6	40	M8	25	14	13	18
LZ-1020-7	50	M8	32	18	17	22
LZ-1020-8	50	M10	32	18	17	22
LZ-1020-9	63	M10	40	22	21	26
LZ-1020-10	63	M12	40	22	21	26
LZ-1020-11	80	M12	50	22	25	35
LZ-1020-12	80	M16	50	30	25	35

短型彈簧柱塞

Short spring plunger

LZ-202



商品介紹:

- 易安裝、好調整
- 用途:定位、鎖定

Product description:

- Easy to install and adjust
- Uses: Positioning, locking

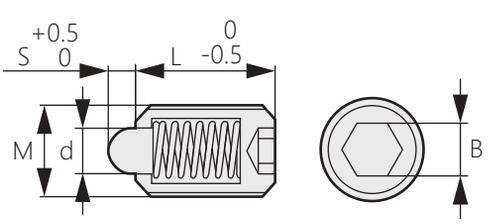

商品型號	主體			凸銷			彈簧
	材質	硬度	表面處理	材質	硬度	表面處理	材質
LZ-202-1	S45C	25-35HRC	髮黑	S45C	57-63HRC	髮黑	SWP-B
LZ-202-2						鍍鎳	
LZ-202-3				聚縮醛			
LZ-202-4	SUS304			SUS440C	55HRC		
LZ-202-5				聚縮醛			

商品型號					M	d	S	L	B	彈力(N)							
										1H		2H		3H		4H	
										MIN	MAX	MIN	MAX	MIN	MAX	MIN	MAX
LZ-202-1-1	LZ-202-2-1	LZ-202-3-1	LZ-202-4-1	LZ-202-5-1	3	1.2	1	7	1.5	0.11	0.48	0.4	1.5	0.8	2	-	-
LZ-202-1-2	LZ-202-2-2	LZ-202-3-2	LZ-202-4-2	LZ-202-5-2	4	2.1	1.2	9	2	0.49	1.55	1.6	5	2	9	4.4	11.9
LZ-202-1-3	LZ-202-2-3	LZ-202-3-3	LZ-202-4-3	LZ-202-5-3	5	2.7	1.5	12	2.5	0.53	2.53	2	7.8	4.9	14.7	4.1	24.9
LZ-202-1-4	LZ-202-2-4	LZ-202-3-4	LZ-202-4-4	LZ-202-5-4	6	3.2		13	3	0.89	3.11	2.9	9.8	5.9	19.6	7.7	30.6
LZ-202-1-5	LZ-202-2-5	LZ-202-3-5	LZ-202-4-5	LZ-202-5-5	8	4	2	15	4	0.9	3.14					8.6	43
LZ-202-1-6	LZ-202-2-6	LZ-202-3-6	LZ-202-4-6	LZ-202-5-6	10	5	2.5	16	5	1.76	4.71	4.9	14.7	9.8	29.4	14.1	53.1
LZ-202-1-7	LZ-202-2-7	LZ-202-3-7	LZ-202-4-7	LZ-202-5-7	12	6	3.5	20	6	1.96	4.82					23.1	58.3
LZ-202-1-8	LZ-202-2-8	LZ-202-3-8	LZ-202-4-8	LZ-202-5-8	16	8	4.5	22	8	3.29	9	9.8	29.4	19.6	58.8	26.6	78.8

不鏽鋼壓花螺絲 LZ-2011

Stainless steel screws



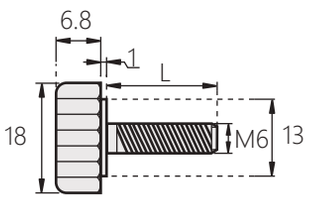

商品介紹:

- 材質:旋鈕-ABS
- 螺絲:不鏽鋼

Product description:

- Material: Knob - ABS
- Screw: Stainless steel

商品型號	L
LZ-2011-1	15
LZ-2011-2	25
LZ-2011-3	30
LZ-2011-4	40

通孔式星型旋鈕螺帽 LZ-1025

Penetrated hand konbs



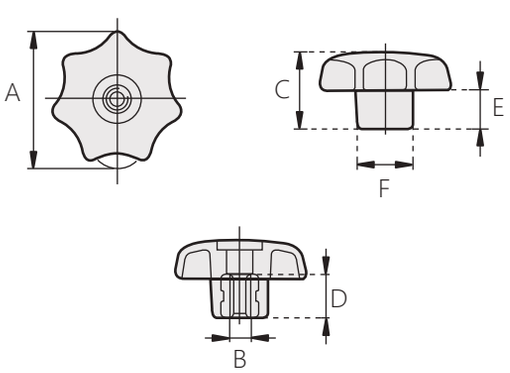

商品介紹:

- 快速固定面板
- 材質:旋鈕-ABS
- 螺栓:鋼鐵

Product description:

- Quickly fastens panel to externally threaded studs
- Material: Knob - ABS
- Bolt: Steel

商品型號	A	B	C	D	E	F
LZ-1025-1	32	M6	20	9	10	14
LZ-1025-2	40	M6	25	12	13	18
LZ-1025-3	40	M6	25	12	13	18
LZ-1025-4	50	M10	32	16	17	22
LZ-1025-5	63	M12	39	21	21	26

旋轉式旋鈕 LZ-1060

Rotary knob



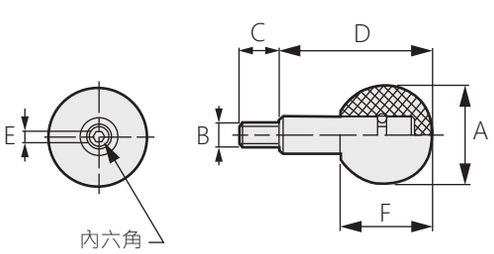

商品介紹:

- 材質:球型旋鈕-電木、軸-鐵
- 表面處理:球型旋鈕-黑色、軸-染黑

Product description:

- Material: Ball knob-bakelite, shaft-iron
- Surface treatment: Ball knob-black, shaft-dyed black

商品型號	A	B	C	D	E	F
LZ-1060-1	25	M6	11	37.5	3	22.5
LZ-1060-2	32	M8	13	48	4	29
LZ-1060-3	40	M10	14	61	5	37
LZ-1060-4	50	M12	21	78	6	46

壓花螺絲 LZ-2010

Knurled Hand Konbs



商品介紹:
- 快速固定面板
- 材質:旋鈕-尼龍玻璃纖維
  螺栓-鋼鐵
- 表面處理:螺栓-鍍鋅

Product description:
- Quickly fastens panel to externally threaded studs
- Material: Knob-nylon and glass fiber、Bolt-steel
- Surface treatment: Bolt- Zinc Alloy plated

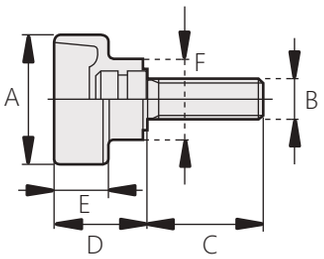

商品型號	A	B	C	D	E	F
LZ-2010-1	20	M4	10、15、20	8.5	8	12
LZ-2010-2	20	M5	10、15、20	8.5	8	12
LZ-2010-3	25	M6	10、20、30	19.5	9	15
LZ-2010-4	30	M8	20、30、40	21.5	11	18
LZ-2010-5	35	M10	20、30、40	29	13	21

星型旋鈕 LZ-1050

Stainless steel screws



商品介紹:
- 快速固定面板
- 材質:旋鈕-尼龍玻璃纖維、螺栓-鋼鐵
- 表面處理:螺栓-鍍鋅

Product description:
- Quickly fastens panel to externally threaded studs
- Material: Knob-nylon and glass fiber、Bolt-steel
- Surface treatment: Bolt- Zinc Alloy plated

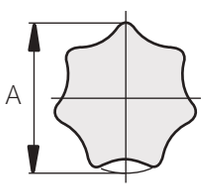

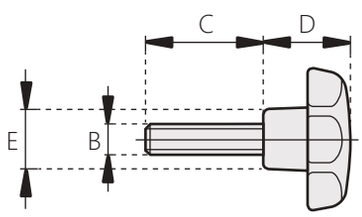

商品型號	A	B	C								D	E
LZ-1050-1	25	M5	10	15	20	30					16	12
LZ-1050-2	25	M6	10	15	20	30					16	12
LZ-1050-3	32	M6	10	15	20	30	40				20	14
LZ-1050-4	40	M6		15	20	30	40	50			25	18
LZ-1050-5	40	M8		15	20	30	40	50			25	18
LZ-1050-6	50	M8		15	20	30	40	50	60		32	22
LZ-1050-7	50	M10			20	30	40	50	60		32	22
LZ-1050-8	63	M10			20	30	40	50	60		40	26
LZ-1050-9	63	M12			20	30	40	50	60		40	26
LZ-1050-10	80	M12			20	30	40	50	60	80	50	35
LZ-1050-11	80	M16					40	50	60	80	50	35

壓花螺絲 LZ-2031

Knurled Hand Konbs



商品介紹:

- 快速固定面板
- 材質:旋鈕-尼龍玻璃纖維、螺栓-銅

Product description:

- Quickly fastens panel to externally threaded studs
- Material:Knob-Nylon and glass fiber、Bolt-Copper

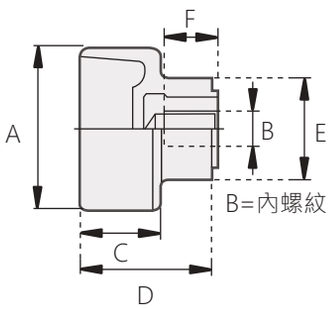

商品型號	A	B	C	D	E	F
LZ-2031-1	20	M4	8	13.5	12	7
LZ-2031-2	20	M5	8	13.5	12	8
LZ-2031-3	25	M6	9	19.5	15	12
LZ-2031-4	30	M8	11	21.5	18	12
LZ-2031-5	35	M8	13	29	21	18
LZ-2031-6	35	M10	13	29	21	18

旋鈕螺帽 LZ-1090

Embossed screw



商品介紹:

- 快速固定面板
- 材質:旋鈕-LZ-1090-1:尼龍玻璃纖維
  LZ-1090-2:電木

Product description:

- Quickly fastens panel to externally threaded studs
- Material:Knob-LZ-1090-1:Nylon and glass fiber
  LZ-1090-2:Bakelite

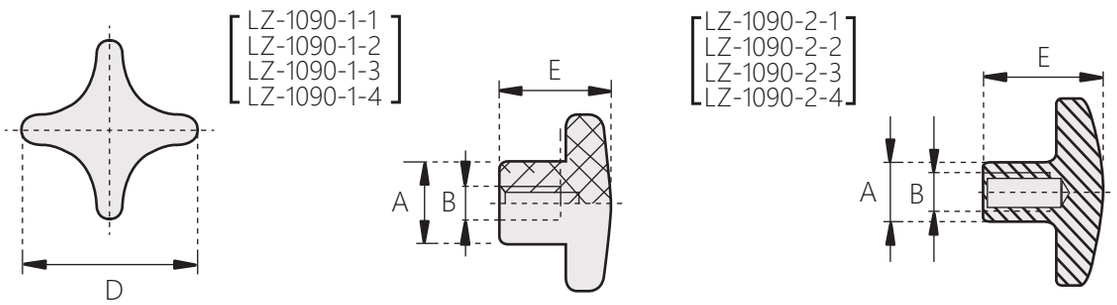

商品型號	材質	D	B	A	E
LZ-1090-1-1	尼龍玻璃纖維	32	M8	14	16
LZ-1090-1-2		43	M5	18	23
LZ-1090-1-3		43	M6	18	23
LZ-1090-1-4		43	M8	18	23
LZ-1090-2-1	電木	25	M5、M6	14	18
LZ-1090-2-2		32	M6、M8	16	20
LZ-1090-2-3		40	M8、M10	18	25
LZ-1090-2-4		50	M10、M12	23	32

一字旋鈕螺絲

LZ-2061

Wing Konb Screws



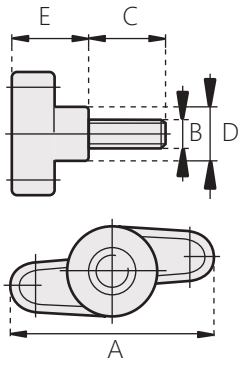

商品介紹:

- 快速固定面板
- 材質:旋鈕-尼龍玻璃纖維、螺栓-鋼鐵
- 表面處理:螺栓-鍍鋅

Product description:

- Quickly fastens panel to externally threaded studs
- Material: Knob-Nylon and glass fiber、Bolt-Steel
- Surface treatment: Bolt- Zinc Alloy plated

商品型號	A	B	C	D	E
LZ-2061-1	35	M8	10、15、20、25、30、35	15.6	18
LZ-2061-2	35	M6	10、15、20、25、30、35	15.6	18
LZ-2061-3	45	M8	15、20、25、30、35、40	20	24
LZ-2061-4	45	M10	15、20、25、30、35、40	20	24

一字旋鈕螺帽

LZ-2062

Wing Konb Nuts



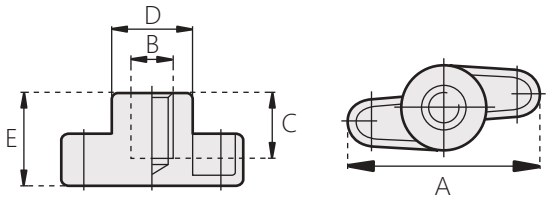

商品介紹:

- 快速固定面板
- 材質:旋鈕-尼龍玻璃纖維、螺栓-鋼鐵
- 表面處理:螺栓-鍍鋅

Product description:

- Quickly fastens panel to externally threaded studs
- Material: Knob-Nylon and glass fiber、Bolt-Steel
- Surface treatment: Bolt- Zinc Alloy plated

商品型號	A	B	C	D	E
LZ-2062-1	35	M6	14	15.6	18
LZ-2062-2	35	M8	14	15.6	18
LZ-2062-3	45	M8	18	20	24
LZ-2062-4	45	M10	18	20	24

WT滑輪

LZ-50

WT pulley



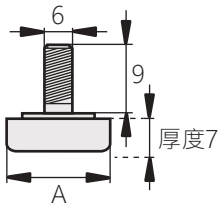

商品介紹:

- 材質:金屬、尼龍
- 用途:各種抽屜、文件櫃等

Product description:

- Material: Metal, nylon
- Uses: All kinds of drawers,file cabinets, etc

商品型號	A	螺牙
LZ-50-1	19	M6
LZ-50-2	22	
LZ-50-3	25	
LZ-50-4	26	
LZ-50-5	29	

鋼珠 LZ-001

Steel ball



商品介紹:

- ■左右兼用
- ■材質：不鏽鋼（USU304）和銅
- ■表面處理：不鏽鋼本色和銅本色
- ■用途：自動化設備、數控設備等

Product description:

- ■ Left and right
- ■ Material: Stainless steel (USU304) and copper
- ■ Surface treatment: Stainless steel and copper
- ■ Uses: Automation equipment, numerical control equipment, etc.

[LZ-001-1]

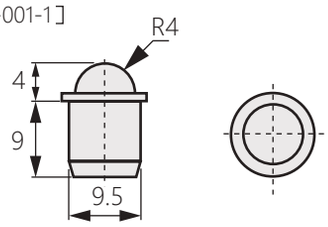

[LZ-001-2]

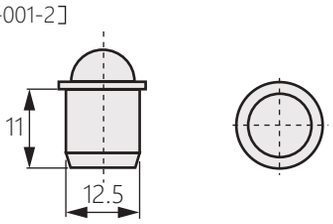

刻度環 LZ-7011

Scale ring



商品介紹:

- ■材質: 鐵
- ■表面處理 : 本體-電鍍霧銀,刻字-黑色

Product description:

- ■ Material: Iron
- ■ Surface treatment: Body-electroplated fog silver, lettering-black

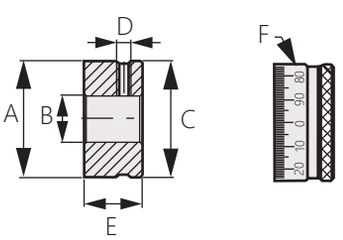

商品型號	A	B	C	D	E	F
LZ-7011-1	25	B8	25.3	M6	25	50格
LZ-7011-2	37	B10	37.3			100格
LZ-7011-3	50	B12	50.5			
LZ-7011-4	60	B15	60.5			
LZ-7011-5	73	B15	73.5			
LZ-7011-6	83	B15	83.5			
LZ-7011-7	100	B15	100.6			

旋鈕式定位柱 LZ-9015

Rotary knob



商品介紹:

- ■材質:旋鈕-尼龍加玻璃纖維,軸-鐵
- ■表面處理:旋鈕-黑色,軸-鍍鋅

Product description:

- ■ Material: Knob-nylon plus fiberglass, shaft-iron
- ■ Surface treatment: Knob-black, shaft-galvanized

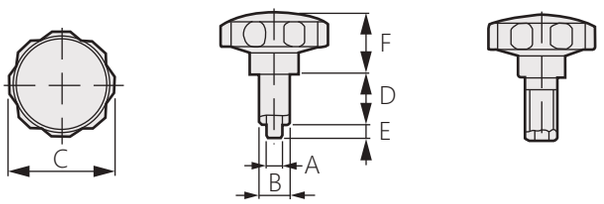

商品型號	A	B	C	D	E	F
LZ-9015-1	4	M8*1.25	25	15	5	20
LZ-9015-2	5	M10*1.25	35	15	5.5	27
LZ-9015-3	8	M16*1.5	55	27	9	32

螺絲

Knurled Hand Konbs

LZ-421



商品介紹:
- 把手材質:PA
- 材質:螺母、公牙-不鏽鋼

Product description:
- Handle material: PA
- Material-Nut, male:Stainless steel

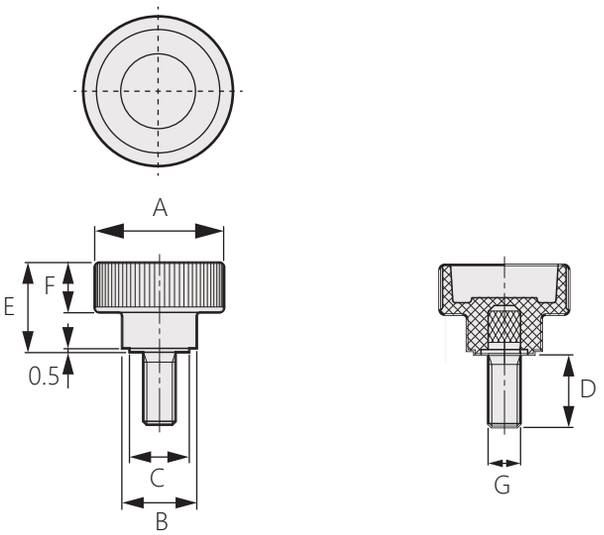

商品型號		A	B	C	D	E	F	G
不鏽鋼	鐵							
	LZ-421-2-1	19	12	9	10	14	8	M4*0.7
	LZ-421-2-2				15			
	LZ-421-2-3				20			
	LZ-421-2-4				30			
LZ-421-1-1	LZ-421-2-5				10			M5*0.8
LZ-421-1-2	LZ-421-2-6				15			
LZ-421-1-3	LZ-421-2-7				20			
LZ-421-1-4	LZ-421-2-8				25			
LZ-421-1-5	LZ-421-2-9	24	14	12	10	16.5	9.5	M6*1.0
LZ-421-1-6	LZ-421-2-10				16			
LZ-421-1-7	LZ-421-2-11				20			
LZ-421-1-8	LZ-421-2-12				25			
LZ-421-1-9	LZ-421-2-13				30			
	LZ-421-2-14	30	16	14	16	19.5	11	M8*1.25
LZ-421-1-10	LZ-421-2-15				20			
LZ-421-1-11	LZ-421-2-16				25			
LZ-421-1-12	LZ-421-2-17				30			
LZ-421-1-13	LZ-421-2-18				40			
LZ-421-1-14	LZ-421-2-19	36	18	16	20	22.5	12.5	M10*1.5
LZ-421-1-15	LZ-421-2-20				25			
LZ-421-1-16	LZ-421-2-21				30			
	LZ-421-2-22				40			
LZ-421-1-17					45			
LZ-421-1-18					55			

可調式把手 LZ-403

Adjustable Hand Lever



商品介紹:

■把手位置可自由自在 360 度調整，優美設計握感佳

■材質:主體-鋅合金、螺栓-鐵

■表面處理:黑色、橘色、銀色

Product description:

■The handle position can be free to adjust 360 degrees, beautiful design good grip

■Material: Main Body-Zinc Alloy ; Bolt-Steel

■Surface treatment: Paint black、paint orange、paint silver

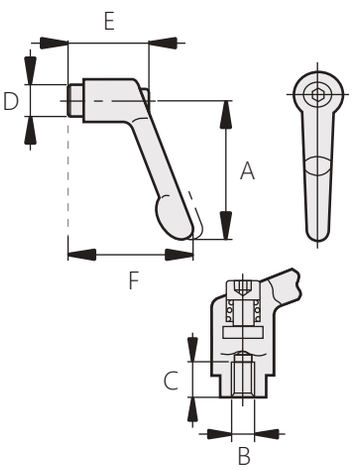

商品型號			A	B	C	D	E	F
黑色	橘色	銀色						
LZ-403-1-1	LZ-403-2-1	LZ-403-3-1	45	M4	8	10	24.5	35
LZ-403-1-2	LZ-403-2-2	LZ-403-3-2	45	M5	8	10	24.5	35
LZ-403-1-3	LZ-403-2-3	LZ-403-3-3	45	M6	8	10	24.5	35
LZ-403-1-4	LZ-403-2-4	LZ-403-3-4	63	M6	10	13.5	31	45
LZ-403-1-5	LZ-403-2-5	LZ-403-3-5	63	M8	10	13.5	31	45
LZ-403-1-6	LZ-403-2-6	LZ-403-3-6	78	M8	14	16	36	55
LZ-403-1-7	LZ-403-2-7	LZ-403-3-7	78	M10	14	16	36	55
LZ-403-1-8	LZ-403-2-8	LZ-403-3-8	92	M10	17	19	43	65
LZ-403-1-9	LZ-403-2-9	LZ-403-3-9	92	M12	17	19	43	65
LZ-403-1-10	LZ-403-2-10	LZ-403-3-10	108	M12	22	23	50.5	76
LZ-403-1-11	LZ-403-2-11	LZ-403-3-11	108	M14	22	23	50.5	76
LZ-403-1-12	LZ-403-2-12	LZ-403-3-12	108	M16	22	23	50.5	76

可調式把手 LZ-404

Adjustable Hand Lever



商品介紹:

■把手位置可自由自在 360 度調整，優美設計握感佳

■材質:主體-鋅合金、螺栓-鐵

■表面處理:烤漆黑色、烤漆橘色、烤漆銀色

■備註: 依照需求的顏色，挑選合適的螺紋長度(C)

Product description:

■The handle position can be free to adjust 360 degrees, beautiful design good grip

■Material: Main Body-Zinc Alloy ; Bolt-Steel

■Surface treatment: Paint black、paint orange、paint silver

■Note: According to the color of the demand, choose the suitable thread length (C)

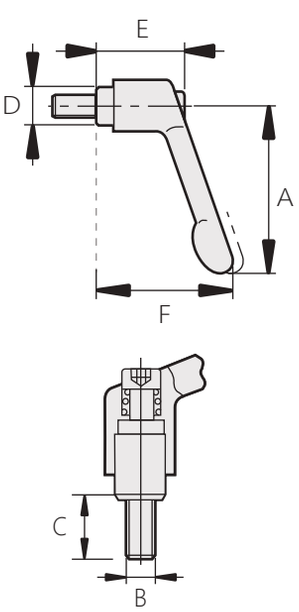

商品型號			A	B	C	D	E	F
黑色	橘色	銀色						
LZ-404-1-1	LZ-404-2-1	LZ-404-3-1	45	M5	10.15.20.25.30	10	24.5	35
LZ-404-1-2	LZ-404-2-2	LZ-404-3-2	45	M6	10.20.30.40.50	10	24.5	35
LZ-404-1-3	LZ-404-2-3	LZ-404-3-3	45	M8	10.20.30.40.50	10	24.5	35
LZ-404-1-4	LZ-404-2-4	LZ-404-3-4	63	M8	10.20.30.40.50	13.5	31	45
LZ-404-1-5	LZ-404-2-5	LZ-404-3-5	63	M10	10.20.30.40.50	13.5	31	45
LZ-404-1-6	LZ-404-2-6	LZ-404-3-6	78	M8	10.20.30.40.50	16	36	55
LZ-404-1-7	LZ-404-2-7	LZ-404-3-7	78	M10	10.20.30.40.50	16	36	55
LZ-404-1-8	LZ-404-2-8	LZ-404-3-8	92	M12	10.20.30.40.50	19	43	65
LZ-404-1-9	LZ-404-2-9	LZ-404-3-9	92	M10	20.30.40.50.60	19	43	65
LZ-404-1-10	LZ-404-2-10	LZ-404-3-10	108	M12	20.30.40.50.60	23	50.5	76
LZ-404-1-11	LZ-404-2-11	LZ-404-3-11	108	M12	30.40.50.60.70	23	50.5	76
LZ-404-1-12	LZ-404-2-12	LZ-404-3-12	108	M10	40.50.60.70	23	50.5	76

**訂購型號範例: LZ-404-1-1-C

可調式把手 LZ-405

Adjustable Hand Lever



商品介紹:

- ■把手位置可自由自在 360 度調整，優美設計握感佳
- ■材質:主體 - 鋅合金、螺栓 - 不鏽鋼
- ■表面處理:烤漆黑色、烤漆橘色、烤漆銀色

Product description:

- ■The handle position can be free to adjust 360 degrees, beautiful design good grip
- ■Material: Body - Zinc alloy, bolt - Stainless steel
- ■Surface treatment: Paint black、paint orange、paint silver

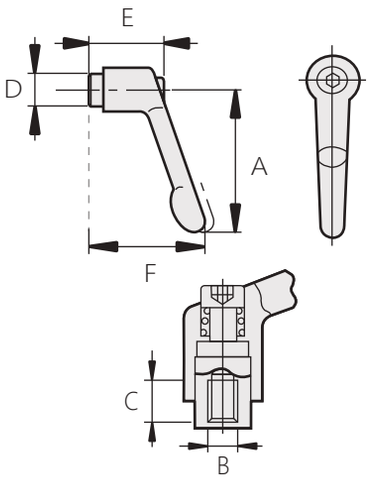

商品型號			A	B	C	D	E	F
黑色	橘色	銀色						
LZ-405-1-1	LZ-405-2-1	LZ-405-3-1	45	M4	8	10	24.5	35
LZ-405-1-2	LZ-405-2-2	LZ-405-3-2	45	M5	8	10	24.5	35
LZ-405-1-3	LZ-405-2-3	LZ-405-3-3	45	M6	8	10	24.5	35
LZ-405-1-4	LZ-405-2-4	LZ-405-3-4	63	M6	10	13.5	31	45
LZ-405-1-5	LZ-405-2-5	LZ-405-3-5	63	M8	10	13.5	31	45
LZ-405-1-6	LZ-405-2-6	LZ-405-3-6	78	M8	14	16	36	55
LZ-405-1-7	LZ-405-2-7	LZ-405-3-7	78	M10	14	16	36	55
LZ-405-1-8	LZ-405-2-8	LZ-405-3-8	92	M10	17	19	43	65
LZ-405-1-9	LZ-405-2-9	LZ-405-3-9	92	M12	17	19	43	65
LZ-405-1-10	LZ-405-2-10	LZ-405-3-10	108	M12	22	23	50.5	76
LZ-405-1-11	LZ-405-2-11	LZ-405-3-11	108	M16	22	23	50.5	76

可調式把手 LZ-406

Adjustable Hand Lever



商品介紹:

- ■把手位置可自由自在 360 度調整，優美設計握感佳
- ■材質:主體 - 鋅合金、螺栓 - 不鏽鋼
- ■表面處理:烤漆黑色、烤漆橘色、烤漆銀色
- ■備註: 依照需求的顏色，挑選合適的螺紋長度(C)

Product description:

- ■The handle position can be free to adjust 360 degrees, beautiful design good grip
- ■Material: Body - Zinc alloy, bolt - Stainless steel
- ■Finish:Paint black、paint orange、paint silver
- ■Note: According to the color of the demand, choose the suitable thread length (C)

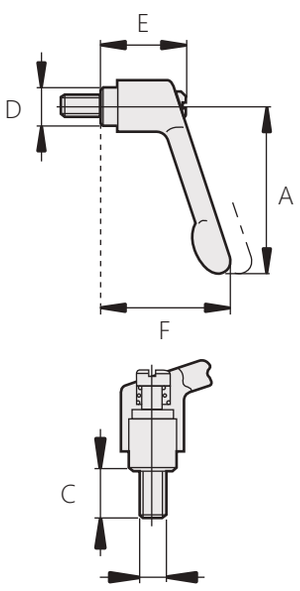

商品型號			A	B	C	D	E	F
黑色	橘色	銀色						
LZ-406-1-1	LZ-406-2-1	LZ-406-3-1	45	M5	10.15.20.25.30	10	24.5	35
LZ-406-1-2	LZ-406-2-2	LZ-406-3-2	45	M6	10.20.30.40.50	10	24.5	35
LZ-406-1-3	LZ-406-2-3	LZ-406-3-3	63	M6	10.20.30.40.50	13.5	31	45
LZ-406-1-4	LZ-406-2-4	LZ-406-3-4	63	M8	10.20.30.40.50	13.5	31	45
LZ-406-1-5	LZ-406-2-5	LZ-406-3-5	78	M8	10.20.30.40.50	16	36	55
LZ-406-1-6	LZ-406-2-6	LZ-406-3-6	78	M10	10.20.30.40.50	16	36	55
LZ-406-1-7	LZ-406-2-7	LZ-406-3-7	92	M10	20.30.40.50.60	19	43	65
LZ-406-1-8	LZ-406-2-8	LZ-406-3-8	92	M12	20.30.40.50.60	19	43	65
LZ-406-1-9	LZ-406-2-9	LZ-406-3-9	108	M12	30.40.50.60.70	23	50.5	76
LZ-406-1-10	LZ-406-2-10	LZ-406-3-10	108	M16	40.50.60.70.80	23	50.5	76
**訂購型號範例: LZ-406-1-1-C								

按壓式可調整把手

LZ-42-4

Push-type adjustable handle



商品介紹:

- 材質:鋅合金、鐵
- 表面處理:染黑、橘色
- 備註:
  1.產品皆以一般原料為主，如需符合RoHS及相關環保材質規範,相關產品訂購量及價格需另外報價
  2.橘色-O、黑色-B完整訂購型號:LZ-42-4-1-L-顏色,
  例如:LZ-42-4-1-40-O

Product description:

- Material: Zinc alloy, Iron
- Surface treatment: Knob-black, shaft-galvanized
- Note: 1.The products are mainly based on general raw materials, if they need to comply with RoHS and related Environmental protection material specifications, the order quantity and price of related products need to be quoted separately.
  2. Orange-O, black-B complete order
  model: LZ-42-4-1-L-color,Ex: LZ-42-4-1-40-O

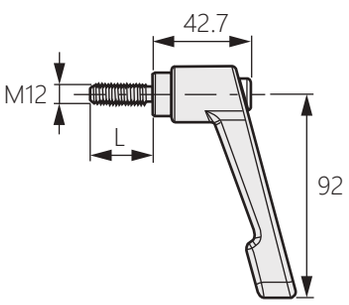

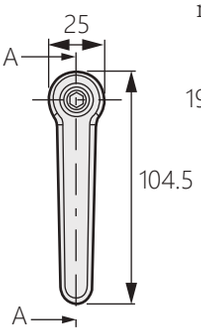

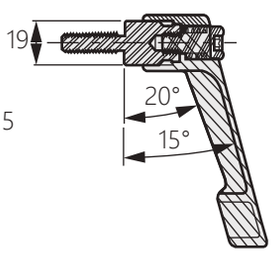

商品型號	L
LZ-42-4-1	40、50
LZ-42-4-2	32、40、50、63
LZ-42-4-3	25、32、40、50、63
LZ-42-4-4	25、32、40、50、63

德標型彈簧柱塞

LZ-204

German standard spring plunger



商品介紹:

- 易安裝、好調整
- 用途:定位、鎖定

Product description:

- Easy to install and adjust
- Uses: Positioning, locking

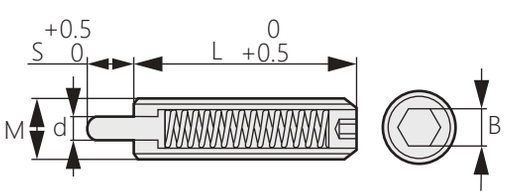

商品型號	主體			凸銷			彈簧
	材質	硬度	表面處理	材質	硬度	表面處理	材質
LZ-204-1	S45C	25-35HRC	髮黑	S45C	57-63HRC	髮黑	SWP-B
LZ-204-2						鍍鎳	
LZ-204-3				聚縮醛			
LZ-204-4	SUS304			SUS440C	55HRC		
LZ-204-5				聚縮醛			

商品型號					M	d	L	S	B	彈力(N) 1H MIN	1H MAX	2H MIN	2H MAX
LZ-204-1-1	LZ-204-2-1	LZ-204-3-1	LZ-204-4-1	LZ-204-5-1	3	1	12	1	0.7	2	4	-	-
LZ-204-1-2	LZ-204-2-2	LZ-204-3-2	LZ-204-4-2	LZ-204-5-2	4	1.5	15	1.5	1.3	4.5	16		
LZ-204-1-3	LZ-204-2-3	LZ-204-3-3	LZ-204-4-3	LZ-204-5-3	5	2.4	18	2.3	1.5	6	19	11	40
LZ-204-1-4	LZ-204-2-4	LZ-204-3-4	LZ-204-4-4	LZ-204-5-4	6	2.7	20	2.5	2			15	43
LZ-204-1-5	LZ-204-2-5	LZ-204-3-5	LZ-204-4-5	LZ-204-5-5	8	3.5	22	3	2.5	10	39	20	75
LZ-204-1-6	LZ-204-2-6	LZ-204-3-6	LZ-204-4-6	LZ-204-5-6	10	4			3				
LZ-204-1-7	LZ-204-2-7	LZ-204-3-7	LZ-204-4-7	LZ-204-5-7	12	6	28	4	4	12	53	45	120
LZ-204-1-8	LZ-204-2-8	LZ-204-3-8	LZ-204-4-8	LZ-204-5-8	16	7.5	32	5	5	45	100	64	160
LZ-204-1-9	LZ-204-2-9	LZ-204-3-9	LZ-204-4-9	LZ-204-5-9	20	10	40	7	6	52	125	75	195
LZ-204-1-10	LZ-204-2-10	LZ-204-3-10	LZ-204-4-10	LZ-204-5-10	24	12	52	10	8	70	170		245

壓入式球頭柱塞

Press-in ball plunger

LZ-1011



商品介紹:

■球頭柱塞，又稱作波珠螺絲、波仔螺絲、定位珠、碰珠、鋼珠緊定彈簧螺絲等，依靠彈簧將前端球頭頂出一定的行程，可用於工件的臨時定位，分度調整等

■球頭柱塞結構簡單，先端球頭依靠內部彈簧頂出固定的行程，克服彈力壓入球頭即可釋放。

Product description:

■Ball plunger, also known as bead screw, wave screw, positioning bead, bump bead,The steel ball tightens the spring screw, etc., and depends on the spring to push the front ball head out Stroke, can be used for temporary positioning of workpieces, indexing adjustment, etc.

■The structure of the ball plunger is simple, and the tip ball head is fixed by the internal spring.The stroke can be released by pressing the ball head against the elastic force.

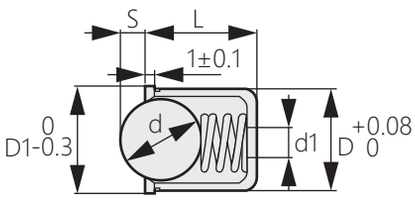

商品型號	主體	球頭		彈簧
	材質	材質	硬度	材質
LZ-1011-1	SUS303	SUS440C	55HRC~	SUS631J1
LZ-1011-2	聚縮醛			
LZ-1011-3		聚縮醛		
LZ-1011-4	銅	SUS440C	55HRC~	

商品型號				D	D1	L	S	d	d1	彈力	
										MIN	MAX
LZ-1011-1-1	LZ-1011-2-1	LZ-1011-3-1	LZ-1011-4-1	3	3.6	4	0.6	2	1	0.74	0.98
LZ-1011-1-2	LZ-1011-2-2	LZ-1011-3-2	LZ-1011-4-2	4	4.6	5	0.8	3	1.5	0.65	5.6
LZ-1011-1-3	LZ-1011-2-3	LZ-1011-3-3	LZ-1011-4-3	4L		6.5				3.1	8.7
LZ-1011-1-4	LZ-1011-2-4	LZ-1011-3-4	LZ-1011-4-4	5	5.6	6	1	4	2	2.8	6.3
LZ-1011-1-5	LZ-1011-2-5	LZ-1011-3-5	LZ-1011-4-5	5L		8				5.1	13.5
LZ-1011-1-6	LZ-1011-2-6	LZ-1011-3-6	LZ-1011-4-6	6	6.6	7	1.6	5	2.5	3	10
LZ-1011-1-7	LZ-1011-2-7	LZ-1011-3-7	LZ-1011-4-7	6L		9				5.3	16.5
LZ-1011-1-8	LZ-1011-2-8	LZ-1011-3-8	LZ-1011-4-8	8	8.6	9	1.9	6.35	3	6.5	11.7
LZ-1011-1-9	LZ-1011-2-9	LZ-1011-3-9	LZ-1011-4-9	8L		12				8	28
LZ-1011-1-10	LZ-1011-2-10	LZ-1011-3-10	LZ-1011-4-10	10	10.6	11.5	2.4	8		9	15
LZ-1011-1-11	LZ-1011-2-11	LZ-1011-3-11	LZ-1011-4-11	10L		14.5				13.5	30.5
LZ-1011-1-12	LZ-1011-2-12	LZ-1011-3-12	LZ-1011-4-12	12	12.6	16	3.5	10		13	60

法蘭式球頭柱塞

Flanged ball plunger

LZ-1021



商品介紹:

■前端無扳手槽，請配合內六角扳手使用

■球形柱塞結構簡單，針尖球由內部彈簧固定。行程可以將球頭壓在鬆緊帶上即可釋放壓力。

Product description:

■There is no wrench slot at the front end, please use it with an allen wrench.

■The ball plunger has a simple structure, and the tip of the ball is fixed by the internal spring.The stroke can be released by pressing the ball head against the elastic force.

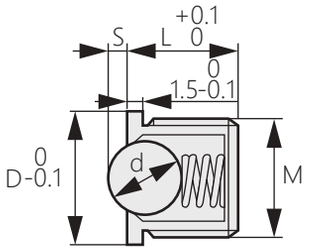

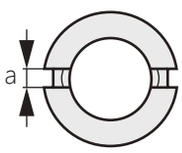

商品型號	主體			球頭		彈簧
	材質	硬度	表面處理	材質	硬度	材質
LZ-1021-1	S45C	25-35HRC	黑色	SUS440C	55HRC~	SUS631J1
LZ-1021-2	SUS303					

商品型號		M	D	L	S	d	a	彈力(N)			
								LZ-1021-1		LZ-1021-2	
								MIN	MAX	MIN	MAX
LZ-1021-1-1	LZ-1021-2-1	5	7	5	0.8	3	0.8	0.6	5.6	1.3	6.4
LZ-1021-1-2	LZ-1021-2-2	6	8	6	1	4	1	2.8	6.3	2.7	8
LZ-1021-1-3	LZ-1021-2-3	8	10	7	1.6	5	1.5	2.9	9.6	1.3	10.2
LZ-1021-1-4	LZ-1021-2-4	10	12	9	1.9	6.35		6.4	11.7	6.1	17.2
LZ-1021-1-5	LZ-1021-2-5	12	14	11.5	2.4	7.94		9	15	2.1	18.8
LZ-1021-1-6	LZ-1021-2-6	14	16	14	2.8	8.5		9.5	20	9.5	20
LZ-1021-1-7	LZ-1021-2-7	16	18	16	3.2	9.53	2	9.9	21.5	13	25.5

一字槽球頭柱塞

Slotted ball plunger

LZ-103



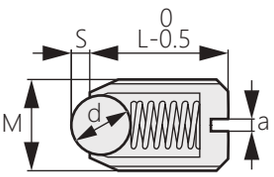

商品介紹:

- ■前端無扳手槽，請配合內六角扳手使用
- ■球形柱塞結構簡單，針尖球由內部彈簧固定。行程可以將球頭壓在鬆緊帶上即可釋放壓力。
- ■備註:訂購型號為LZ-103-1-1-L,例如:LZ-103-1-1-6

Product description:

- ■There is no wrench slot at the front end, please use it with an allen wrench.
- ■The ball plunger has a simple structure, and the tip of the ball is fixed by the internal spring.The stroke can be released by pressing the ball head against the elastic force.
- ■Note: The order model is LZ-103-1-1-L,
  Ex: LZ-103-1-1-6

商品型號	主體			球頭		彈簧
	材質	硬度	表面處理	材質	硬度	材質
LZ-103-1	SMC435	29-35HRC	黑色	SUJ2	55HRC	SWP-B
LZ-103-2				聚縮醛		
LZ-103-3	SUS304			SUS440C	55HRC	
LZ-103-4				聚縮醛		

商品型號	M	L	d	S	a	彈力(N)	
						MIN	MAX
LZ-103-1-1	3	6,8,10,12	1.5	0.5	1	1.5	2.9
LZ-103-1-2	4	6,10,12,16	2	0.7	1	3.9	9.8
LZ-103-1-3	5	10,12,16,20	2.5	0.8	1.2	4.9	19.6
LZ-103-1-4	6	10,12,14,16,20	3	1.2	1.2	4.9	29.4
LZ-103-1-5	8	10,12,16,20,25	5	2	1.5	12.7	39.2
LZ-103-1-6	10	16,19,20,25,30	6	2.5	1.5	18.6	49
LZ-103-1-7	12	20,22,25,30	8	3	2	19.6	58.8
LZ-103-1-8	16	24,30	10	4	2	29.4	98
LZ-103-1-9	20	30	13	5	3	35	120
LZ-103-1-10	24	35	16	7	3	50	200

球頭柱塞

Ball plunger

LZ-104



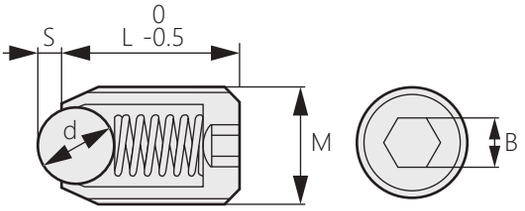

商品介紹:

- ■前端無扳手槽，請配合內六角扳手使用
- ■球形柱塞結構簡單，針尖球由內部彈簧固定。行程可以將球頭壓在鬆緊帶上即可釋放壓力。
- ■備註:訂購型號為LZ-104-1-1-L,例如:LZ-104-1-1-5

Product description:

- ■There is no wrench slot at the front end, please use it with an allen wrench.
- ■The ball plunger has a simple structure, and the tip of the ball is fixed by the internal spring.The stroke can be released by pressing the ball head against the elastic force.
- ■Note: The order model is LZ-104-1-1-L,
  Ex: LZ-104-1-1-5

商品型號	主體			球頭	彈簧	
	材質	硬度	表面處理	材質	硬度	材質
LZ-104-1	SCM435	29-35HRC	黑色	SUJ2	55HRC~	SWP-B
LZ-104-2				聚縮醛		
LZ-104-3	SUS304			SUS440C	55HRC~	
LZ-104-4				聚縮醛		

商品型號	M	L	d	S	B	彈力(N)							
						超輕載(1H)		輕載(2H)		重載(3H)		超重載(4H)	
						MIN	MAX	MIN	MAX	MIN	MAX	MIN	MAX
LZ-104-1-1	3	5,6,8,10,12,16	1.5	0.5	1.5	0.3	0.64	1	2	1.5	2.9	2.2	5
LZ-104-1-2	4	6,8,10,12,16,20	2	0.7	2	0.6	1.6	2	4.9	3.9	9.8	5.2	12.5
LZ-104-1-3	5	8,10,12,16,18,20,25,30	2.5	0.8	2.5	1	3.12	2.9	9.8	4.9	19.6	11.2	24.1
LZ-104-1-4	6	8,10,12,14,16,20,25,30	3	1.2	3	1.6	4.85	4.9	14.7	9.8	29.4	17.7	33.4
LZ-104-1-5	8	10,12,16,20,23,25,30,35,40,50	5	2	4	2.4	6.36	6.9	19.6	12.7	39.2	21.4	45.3
LZ-104-1-6	10	16,19,20,25,27,30,35,40,45,50	6	2.5	5	3	8.1	8.8	24.5	18.6	49	23.5	58.7
LZ-104-1-7	12	20,22,25,30,32,35,40	8	3	6	3.5	9.68	9.8	29.4	19.6	58.8	24.1	62.3
LZ-104-1-8	16	25,30,35,40	10	4	8	5.7	15.8	15.7	49	29.4	98	43.6	116

球頭柱塞

Ball plunger

LZ-105



商品介紹:

- ■前端無扳手槽，請配合內六角扳手使用
- ■球形柱塞結構簡單，針尖球由內部彈簧固定。行程可以將球頭壓在鬆緊帶上即可釋放壓力。

Product description:

- ■There is no wrench slot at the front end, please use it with an allen wrench.
- ■The ball plunger has a simple structure, and the tip of the ball is fixed by the internal spring.The stroke can be released by pressing the ball head against the elastic force.

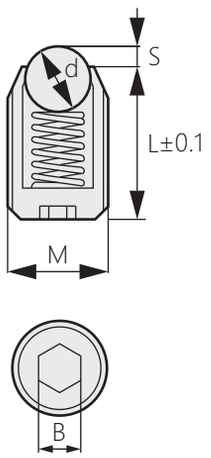

商品型號	主體			球頭		彈簧
	材質	硬度	表面處理	材質	硬度	材質
LZ-105-1	S45C	25-35HRC	黑色	SUS440C	55HRC~	SUS631J1
LZ-105-2	SUS304					

商品型號		M	d	S	L	B	彈力(N)	
							MIN	MAX
LZ-105-1-1	LZ-105-2-1	3	2	0.5	5	1.5	1	2
LZ-105-1-2	LZ-105-2-2	4	2.5	0.8	6	2	1.1	3.7
LZ-105-1-3	LZ-105-2-3	5	3	1	8	2.5	2.2	5.9
LZ-105-1-4	LZ-105-2-4	6	4	1	9	3	4.6	8.7
LZ-105-1-5	LZ-105-2-5	8	5	1.2	10	4	7.5	11.9

滾輪型球頭柱塞

Roller ball plunger

LZ-106



商品介紹:

- ■前端無扳手槽，請配合內六角扳手使用
- ■球形柱塞結構簡單，針尖球由內部彈簧固定。行程可以將球頭壓在鬆緊帶上即可釋放壓力。

Product description:

- ■There is no wrench slot at the front end, please use it with an allen wrench.
- ■The ball plunger has a simple structure, and the tip of the ball is fixed by the internal spring.The stroke can be released by pressing the ball head against the elastic force.

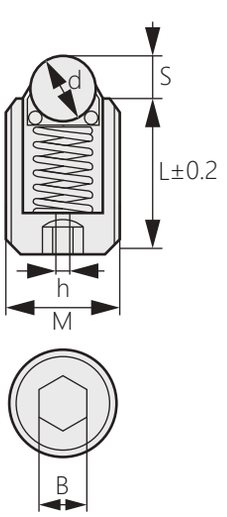

商品型號	主體	球頭		副球		彈簧	使用溫度範圍
	材質	材質	硬度	材質	硬度	材質	
LZ-106-1	SCM304	SUS440C	55HRC	SUS440C	55HRC	SUS631J1	- 30~100°C
LZ-106-2		聚縮醛					- 30~80°C

商品型號		M	d	S	L	B	h	彈力(N)	
								MIN	MAX
LZ-106-1-1	LZ-106-2-1	6	3	0.8	13	3	1.5	8.1	29.6
LZ-106-1-2	LZ-106-2-2	8	4	1.3	15	4	2	12.6	39.8
LZ-106-1-3	LZ-106-2-3	10	5	1.6	16	5	2.5	13.5	44.4
LZ-106-1-4	LZ-106-2-4	12	7.1	2.3	20	6	3	16.1	46.9
LZ-106-1-5	LZ-106-2-5	16	9.5	3.1	25	8	4	26.1	88.2

外六角螺栓型球頭柱塞

Hexagon bolt type ball plunger

LZ-107



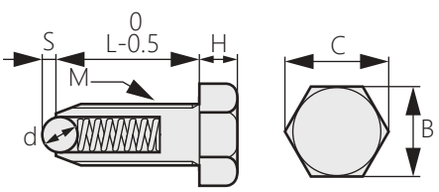

商品介紹:

- 前端無扳手槽，請配合內六角扳手使用
- 球形柱塞結構簡單，針尖球由內部彈簧固定。行程可以將球頭壓在鬆緊帶上即可釋放壓力。
- 備註:訂購型號為LZ-107-1-1-L,例如:LZ-107-1-1-10

Product description:

- There is no wrench slot at the front end, please use it with an allen wrench.
- The ball plunger has a simple structure, and the tip of the ball is fixed by the internal spring.The stroke can be released by pressing the ball head against the elastic force.
- Note: The order model is LZ-107-1-1-L,
  Ex: LZ-107-1-1-10

商品型號	主體			球頭		彈簧
	材質	硬度	表面處理	材質	硬度	材質
LZ-107-1	SCM435	29-35HRC	髮黑	SUJ2	55HRC~	SWP-B
LZ-107-2			鍍鎳			
LZ-107-3	SUS304			SUS440C		

商品型號			M	L	d	S	B	C	H	彈力(N)			
										1H		2H	
										MIN	MAX	MIN	MAX
LZ-107-1-1	LZ-107-2-1	LZ-107-3-1	4	10,15,20,25,30	2.5	0.8	7	8.1	2.8	1.9	4.9	3.9	9.8
LZ-107-1-2	LZ-107-2-2	LZ-107-3-2	5	10,15,20,25,30,35,40	3	0.8	8	9.2	3.5	3.3	9.8	4.9	19.6
LZ-107-1-3	LZ-107-2-3	LZ-107-3-3	6	10,15,20,25,30,35,40,45,50	3	0.8	10	11.5	4	5.1	15.3	9.8	29.4
LZ-107-1-4	LZ-107-2-4	LZ-107-3-4	8	15,20,25,30,35,40,45,50	4	1	13	15	5.5	5.5	19.1	12.7	39.2
LZ-107-1-5	LZ-107-2-5	LZ-107-3-5	10	15,20,25,30,35,40,45,50	5	1.2	17	19.6	7	8.9	24.1	18.6	49
LZ-107-1-6	LZ-107-2-6	LZ-107-3-6	12	20,25,30,35,40,45,50	7	1.8	19	21.9	8	10.9	29.3	19.6	58.8
LZ-107-1-7	LZ-107-2-7	LZ-107-3-7	16	25,30,35,40,45,50	9.5	2.5	24	27.7	10	14.9	48.9	29.4	98

美製壓入式球頭柱塞

American press-fit ball plunger

LZ-112



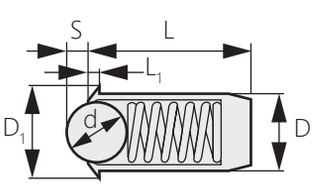

商品介紹:

- ■安裝簡單、鎖緊力好、不易鬆動
- ■用途:定點、定位、鎖定

Product description:

- ■Simple installation, good locking force, not easy to loosen
- ■Purpose: Fixed point, positioning, locking

商品型號	主體		珠子		彈簧
	材質	表面處理	材質	硬度	材質
LZ-112-1	S45C	髮黑	SUS440C	55HRC~	SUS361J1
LZ-112-2	SUS303				
LZ-112-3	S45C	髮黑	聚縮醛		
LZ-112-4	SUS303				

商品型號				D	L	D1	S	d	L1	彈力(N)					
										1H		2H		3H	
										MIN	MAX	MIN	MAX	MIN	MAX
LZ-112-1-1	LZ-112-2-1	LZ-112-3-1	LZ-112-4-1	3.18	6.4	4.75	0.89	2.39	0.8	1.8	5.9	3.4	12	9	22
LZ-112-1-2	LZ-112-2-2	LZ-112-3-2	LZ-112-4-2	4.78	10	6.35	1.47	4	1	4.5	11.3	9	22	19	44
LZ-112-1-3	LZ-112-2-3	LZ-112-3-3	LZ-112-4-3	6.35	12	7.9	1.78	4.75	1.15	6.8	15.8	13.5	30	27	58
LZ-112-1-4	LZ-112-2-4	LZ-112-3-4	LZ-112-4-4	7.9	16	9.5	2.29	6.35	1.15	9	22.5	18	45	36	72
LZ-112-1-5	LZ-112-2-5	LZ-112-3-5	LZ-112-4-5	9.5	20	12.7	2.8	7.9	2	11.3	31.5	22.5	62	45	81
LZ-112-1-6	LZ-112-2-6	LZ-112-3-6	LZ-112-4-6	12.7	28	17.5	4.1	11	2.8	18	40.5	36	80	72	105

內六角螺栓型球頭柱塞

Hexagon bolt type ball plunger

LZ-108



商品介紹:

- ■前端無扳手槽，請配合內六角扳手使用
- ■球形柱塞結構簡單，針尖球由內部彈簧固定。行程可以將球頭壓在鬆緊帶上即可釋放壓力。
- ■備註:訂購型號為LZ-108-1-1-L,例如:LZ-108-1-1-10

Product description:

- ■There is no wrench slot at the front end, please use it with an allen wrench.
- ■The ball plunger has a simple structure, and the tip of the ball is fixed by the internal spring.The stroke can be released by pressing the ball head against the elastic force.
- ■Note: The order model is LZ-108-1-1-L,
  Ex: LZ-108-1-1-10

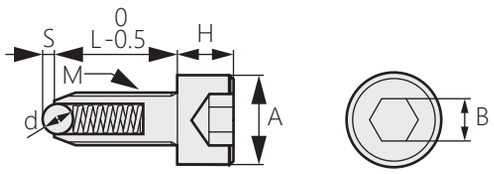

商品型號	主體			球頭		彈簧
	材質	硬度	表面處理	材質	硬度	材質
LZ-108-1	SCM435	29-35HRC	髮黑	SUJ2	55HRC~	SWP-B
LZ-108-2			鍍鎳			
LZ-108-3	SUS304			SUS440C		

商品型號			M	L	d	S	A	B	H	彈力(N)			
										1H		2H	
										MIN	MAX	MIN	MAX
LZ-108-1-1	LZ-108-2-1	LZ-108-3-1	4	10,15,20,25,30	2.5	0.8	7	3	4	1.9	4.9	3.9	9.8
LZ-108-1-2	LZ-108-2-2	LZ-108-3-2	5	10,15,20,25,30,35,40	3	0.8	8.5	4	5	3.3	9.8	4.9	19.6
LZ-108-1-3	LZ-108-2-3	LZ-108-3-3	6	10,15,20,25,30,35,40,45,50	3	0.8	10	5	6	5.1	15.3	9.8	29.4
LZ-108-1-4	LZ-108-2-4	LZ-108-3-4	8	15,20,25,30,35,40,45,50	4	1	13	6	8	5.5	19.1	12.7	39.2
LZ-108-1-5	LZ-108-2-5	LZ-108-3-5	10	15,20,25,30,35,40,45,50	5	1.2	16	8	10	8.9	24.1	18.6	49
LZ-108-1-6	LZ-108-2-6	LZ-108-3-6	12	20,25,30,35,40,45,50	7	1.8	18	10	12	10.9	29.3	19.6	58.8
LZ-108-1-7	LZ-108-2-7	LZ-108-3-7	16	25,30,35,40,45,50	9.5	2.5	24	14	16	14.9	48.9	29.4	98

樹脂主體型球頭柱塞

Resin body type ball plunger

LZ-109



商品介紹:

- ■前端無扳手槽，一字槽安裝
- ■球形柱塞結構簡單，針尖球由內部彈簧固定。行程可以將球頭壓在鬆緊帶上即可釋放壓力。

Product description:

- ■There is no wrench slot at the front, and the slot is installed.
- ■The ball plunger has a simple structure, and the tip of the ball is fixed by the internal spring.The stroke can be released by pressing the ball head against the elastic force.

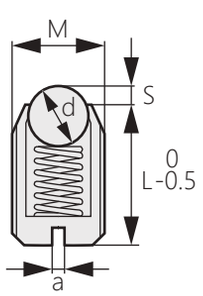

商品型號	主體	球頭		彈簧	可使用溫度範圍
	材質	材質	硬度	材質	
LZ-109-1	聚縮醛(黑色)	SUS440C	55HRC	SUS304	-30~80°C
LZ-109-2	尼龍66(白色)			SUS631J1	
LZ-109-3	聚縮醛(黑色)	聚縮醛(白色)		SUS304	
LZ-109-4	尼龍66(白色)			SUS631J1	

商品型號				M	d	S	L	a	彈力(N)			
									1H		2H	
									MIN	MAX	MIN	MAX
LZ-109-1-1	LZ-109-2-1	LZ-109-3-1	LZ-109-4-1	6	3.2	0.8	13	1	0.2	5	8	16
LZ-109-1-2	LZ-109-2-2	LZ-109-3-2	LZ-109-4-2	8	4	1	15	1.2	2	12	15	30
LZ-109-1-3	LZ-109-2-3	LZ-109-3-3	LZ-109-4-3	10	4.8	1.2	16	1.5	2.5	16	20	39

滾輪型壓入式球頭柱塞 LZ-110

Roller type press-in ball plunger



商品介紹:
- 適合用在不需螺牙部件
- 材質:主體-聚縮醛,主球-聚縮醛,副球-SUS400C,彈簧-SUS361J1

Product description:
- Suitable for parts that do not require threaded teeth
- Material: Main body-polyacetal, main ball-polyacetal, auxiliary ball-SUS400C, spring-SUS361J1

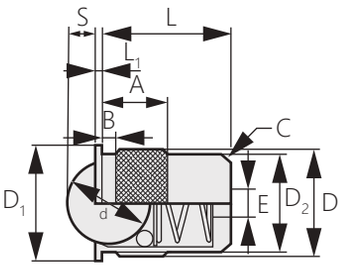

商品型號	D	D1	D2	L	S	L1	d	A	B	E	C	彈力(N)	
												MIN	MAX
LZ-110-1	7	9	-	7.5	1.5	1	4.76	7.5	1	1.5	0.8	0.1	2
LZ-110-2	9	11	8.4	10	1.7		5.56	7		2.5	1	0.2	4
LZ-110-3	13	15	12.4	15	2.8		8.73		1.2	3		0.3	7
LZ-110-4	15	17	14.7	16.5	3.5		10.32	8.5	1.5	3.5			11
LZ-110-5	20	22	19.4	22.5	5.2	1.5	15.88	10.5		5.3			14
LZ-110-6	24	26	23.4	29	6.6		19.05	13.5		6.4			21

無台階型壓入式球頭柱塞 LZ-111

Stepless press-in ball plunger



商品介紹:
- 材質:主體-SUS303,珠子-SUS440C,彈簧-SUS304
- 用途:定位、鎖定

Product description:
- Material: Main body-SUS303, beads-SUS440C, spring-SUS304
- Uses: Positioning, locking

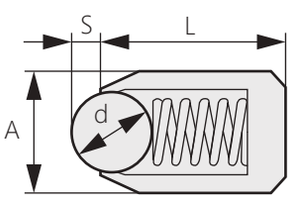

商品型號	A	L	S	d	彈力(N)	
					MIN	MAX
LZ-111-1	3	7	0.65	2	4.7	7.5
LZ-111-2	3.5	9	0.8	2.5	6	14.5
LZ-111-3	4	11	0.9	3	8	14
LZ-111-4	4.5	12	0.95	3.2	9.5	16.5
LZ-111-5	5	13	1	3.5	11	18
LZ-111-6	5.5	14	1.2	4	15.5	25
LZ-111-7	6	15	1.5	4.5	18	31

無台階型壓入式球頭柱塞 LZ-10

Stepless press-in ball plunger



商品介紹:
- 材質:PP

Product description:
- Material: PP

[LZ-101]

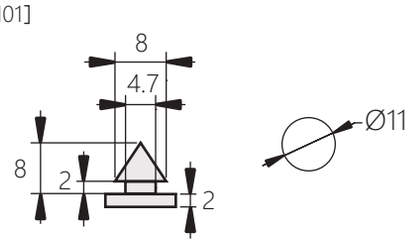

[LZ-102]

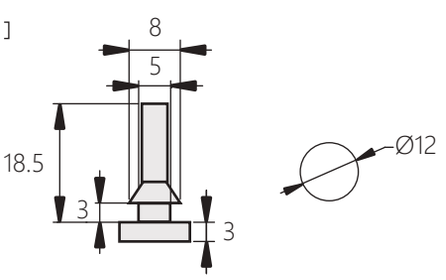

彈簧柱塞

Spring plunger

LZ-201



商品介紹:

- 易安裝、好調整
- 用途:定位、鎖定

Product description:

- Easy to install and adjust
- Uses: Positioning, locking

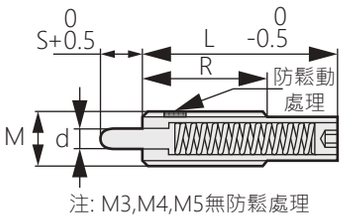

注: M3,M4,M5無防鬆處理

商品型號	主體			凸銷			彈簧
	材質	硬度	表面處理	材質	硬度	表面處理	材質
LZ-201-1	S45C	25-35HRC	髮黑	S45C	57-63HRC	髮黑	SWP-B
LZ-201-2						鍍鎳	
LZ-201-3				聚縮醛			
LZ-201-4	SUS304			SUS440C	55HRC		
LZ-201-5				聚縮醛			

商品型號					M	S	d	R	L	B	彈力(N)							
											1H		2H		3H		4H	
											MIN	MAX	MIN	MAX	MIN	MAX	MIN	MAX
LZ-201-1-1	LZ-201-2-1	LZ-301-3-1	LZ-201-4-1	LZ-201-5-1	3	1.5	1.1	10	10	0.9	0.05	0.32	0.49	1	0.78	2.9	2.2	4.5
LZ-201-1-2	LZ-201-2-2	LZ-301-3-2	LZ-201-4-2	LZ-201-5-2		3		15	15		0.09	0.32	0.29	1			1.8	
LZ-201-1-3	LZ-201-2-3	LZ-301-3-3	LZ-201-4-3	LZ-201-5-3	4	2	1.6	15	15	1.3	0.23	0.65	1	2	2.9	8.8	5.2	13
LZ-201-1-4	LZ-201-2-4	LZ-301-3-4	LZ-201-4-4	LZ-201-5-4		4		24	24		0.24	0.65	0.59	2	2			
LZ-201-1-5	LZ-201-2-5	LZ-301-3-5	LZ-201-4-5	LZ-201-5-5	5	3	2	20	20	1.5	0.74	2.95	2	9.8	4.9	19.6	9.1	24.5
LZ-201-1-6	LZ-201-2-6	LZ-301-3-6	LZ-201-4-6	LZ-201-5-6		5		27	27		0.72	2.95	2		2.9		8.8	24.8
LZ-201-1-7	LZ-201-2-7	LZ-301-3-7	LZ-201-4-7	LZ-201-5-7	6	3	2.5	25	25	2	0.85	3.2	5.9		7.8	29.4	14.2	39.5
LZ-201-1-8	LZ-201-2-8	LZ-301-3-8	LZ-201-4-8	LZ-201-5-8		5		30	30		0.85	3.2	2		4.9		14.1	39.4
LZ-201-1-9	LZ-201-2-9	LZ-301-3-9	LZ-201-4-9	LZ-201-5-9	8	3	3.1	25	25	2.5	0.9	3.3	5.9		14.7		35.3	41.2
LZ-201-1-10	LZ-201-2-10	LZ-301-3-10	LZ-201-4-10	LZ-201-5-10		5		27	27		0.9	3.3	2.9		7.8		14.7	
LZ-201-1-11	LZ-201-2-11	LZ-301-3-11	LZ-201-4-11	LZ-201-5-11	10	5	3.8	30	30	3	1.9	4.7	5.9	14.7	8.8	49	15.7	62.8
LZ-201-1-12	LZ-201-2-12	LZ-301-3-12	LZ-201-4-12	LZ-201-5-12		10		30	43		1.7	4.7	2.9		7.8		12.7	
LZ-201-1-13	LZ-201-2-13	LZ-301-3-13	LZ-201-4-13	LZ-201-5-13	12	5	5.5	30	30	4	1.5	4.7	5.9		18.6		37.2	98.1
LZ-201-1-14	LZ-201-2-14	LZ-301-3-14	LZ-201-4-14	LZ-201-5-14		10		35	43		1.3	5.9	2.9	19.6	7.8		14.7	
LZ-201-1-15	LZ-201-2-15	LZ-301-3-15	LZ-201-4-15	LZ-201-5-15		15			51		1.6	5.9	2.9		4.9		14.9	
LZ-201-1-16	LZ-201-2-16	LZ-301-3-16	LZ-201-4-16	LZ-201-5-16	16	10	8		60	5	1.7	12.8	5.9	39.2	12.7	78.5	23.5	147.2
LZ-201-1-17	LZ-201-2-17	LZ-301-3-17	LZ-201-4-17	LZ-201-5-17		15			60		1.7	12.8	3.9				21.6	
LZ-201-1-18	LZ-201-2-18	LZ-301-3-18	LZ-201-4-18	LZ-201-5-18		20			85		1.7	12.8	4.9		9.8		12.7	
LZ-201-1-19	LZ-201-2-19	LZ-301-3-19	LZ-201-4-19	LZ-201-5-19		30			125		-	-	2.9		6.9		19.6	
LZ-201-1-20	LZ-201-2-20	LZ-301-3-20	LZ-201-4-20	LZ-201-5-20	20	15	10	45	60	6			12.7	78.5	24.5	147.1	12.7	245.3
LZ-201-1-21	LZ-201-2-21	LZ-301-3-21	LZ-201-4-21	LZ-201-5-21	24	15			60	10			19.6	98.1	47.1	215.7	24.5	314

一字槽短型彈簧柱塞

Slotted short spring plunger

LZ-203



商品介紹:

- 易安裝、好調整
- 用途:定位、鎖定

Product description:

- Easy to install and adjust
- Uses: Positioning, locking

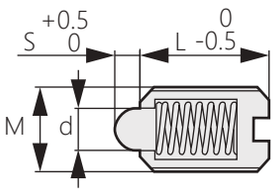

商品型號	主體			凸銷			彈簧
	材質	硬度	表面處理	材質	硬度	表面處理	材質
LZ-203-1	S45C	25-35HRC	髮黑	S45C	57-63HRC	髮黑	SWP-B
LZ-203-2						鍍鎳	
LZ-203-3				聚縮醛			
LZ-203-4	SUS304			SUS440C	55HRC		
LZ-203-5				聚縮醛			

商品型號					M	d	S	L	彈力(N)							
									1H		2H		3H		4H	
									MIN	MAX	MIN	MAX	MIN	MAX	MIN	MAX
LZ-203-1-1	LZ-203-2-1	LZ-203-3-1	LZ-203-4-1	LZ-203-5-1	4	1.8	1.5	9	0.49	1.55	1.6	5	2	9	4.4	11.9
LZ-203-1-2	LZ-203-2-2	LZ-203-3-2	LZ-203-4-2	LZ-203-5-2	5	2.4	2	12	0.53	2.53	2	7.8	4.9	14.7	4.1	24.9
LZ-203-1-3	LZ-203-2-3	LZ-203-3-3	LZ-203-4-3	LZ-203-5-3	6	2.7		14	0.89	3.11	2.9	9.8	5.9	19.6	7.7	30.6
LZ-203-1-4	LZ-203-2-4	LZ-203-3-4	LZ-203-4-4	LZ-203-5-4	8	3.8		16	0.9	3.14					8.6	43
LZ-203-1-5	LZ-203-2-5	LZ-203-3-5	LZ-203-4-5	LZ-203-5-5	10	4.5	2.5	19	1.76	4.71	4.9	14.7	9.8	29.4	14.1	53.1
LZ-203-1-6	LZ-203-2-6	LZ-203-3-6	LZ-203-4-6	LZ-203-5-6	12	6	3.5	22	1.96	4.82					23.1	58.3
LZ-203-1-7	LZ-203-2-7	LZ-203-3-7	LZ-203-4-7	LZ-203-5-7	16	8.5	4.5	24	3.29	9	9.8	29.4	19.6	58.8	26.6	78.8

小徑彈簧柱塞

Small diameter spring plunger

LZ-205



商品介紹:

- 易安裝、好調整
- 用途:定位、鎖定

Product description:

- Easy to install and adjust
- Uses: Positioning, locking

商品型號	凸銷形狀	主體	凸銷	彈簧	可使用溫度範圍
		材質	材質	材質	
LZ-205-1	平頭型	SUS303	SUS304	SUS304	-30°~140°C
LZ-205-2	球面型				
LZ-205-3	錐度型				

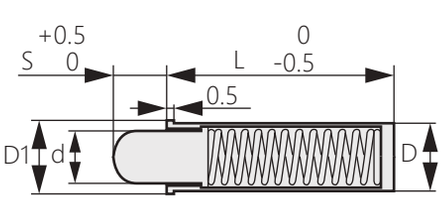



商品型號			M	S	d	D1	L	彈力(N)			
								1H		2H	
								MIN	MAX	MIN	MAX
LZ-205-1-1	LZ-205-2-1	LZ-205-3-1	1.5	1.5	0.5	2	13	0.49	0.98	0.93	1.86
LZ-205-1-2	LZ-205-2-2	LZ-205-3-2	2		1	2.5	16			1.96	3.92
LZ-205-1-3	LZ-205-2-3	LZ-205-3-3		3			26			1.67	3.73
LZ-205-1-4	LZ-205-2-4	LZ-205-3-4	3		2	3.5	16		1.47	2.45	3.92
LZ-205-1-5	LZ-205-2-5	LZ-205-3-5		6			26			2.26	3.73
LZ-205-1-6	LZ-205-2-6	LZ-205-3-6	4	3	3	4.5	15	0.59		3.43	5.3
LZ-205-1-7	LZ-205-2-7	LZ-205-3-7		6			20	0.49	2.06	2.45	
LZ-205-1-8	LZ-205-2-8	LZ-205-3-8		9			32	0.69	3.92	2.94	6.47
LZ-205-1-9	LZ-205-2-9	LZ-205-3-9		4			17	0.64	1.96	3.73	6.96
LZ-205-1-10	LZ-205-2-10	LZ-205-3-10	5	8	4	5.5	24	0.78	3.82	3.04	7.06
LZ-205-1-11	LZ-205-2-11	LZ-205-3-11		12			32	0.83	5.79	2.75	

滾輪型壓入式球頭柱塞 LZ-113

Roller type press-in ball plunger



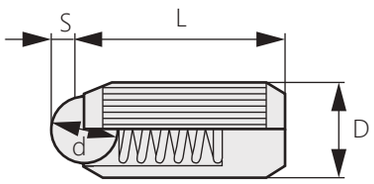

商品介紹:

- 易於安裝，無需螺紋調節
- 材質:主體-SUS303,珠子-SUS440C,彈簧-SUS304

Product description:

- Easy to install without thread adjustment
- Material: Main body-SUS303, beads-SUS440C, spring-SUS304

商品型號	D	L	S	d	彈力(N)			
					1H		2H	
					MIN	MAX	MIN	MAX
LZ-113-1	3.9	7.36	0.9	2.38	1.8	5.9	3.4	12
LZ-113-2	5.46	11	1.5	4	4.5	11	9	22
LZ-113-3	6.58	13.2	1.8	4.78	6.8	16	13.5	32
LZ-113-4	8.15	17.8	2.3	6.35	9	22.5	18	45
LZ-113-5	9.75	22	2.8	8	11	31.5	22	63
LZ-113-6	12.9	30.8	4	11	18	40.5	36	81

雙頭定位型壓入式球頭柱塞 LZ-114

Double-head positioning type press-in ball plunger



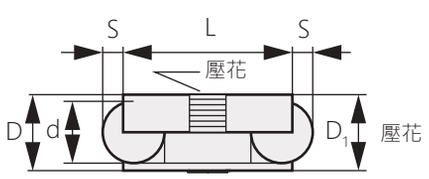

商品介紹:

- 材質:主體-銅,珠子-SUS440C,彈簧-SUS304
- 用途:定位、鎖定

Product description:

- Material: Main body-copper, beads-SUS440C, spring-SUS304
- Uses: Positioning, locking

商品型號	D	L	S	D1	d	彈力(N)	
						MIN	MAX
LZ-114-1	3	7.3	0.8	3.1	2.5	2	4.5
LZ-114-2	4	9	0.9	4.1	3	2.5	7.5
LZ-114-3	5	10.8	1.2	5.1	4	3.5	8
LZ-114-4	7	14	2	7.2	6	4	12
LZ-114-5	8	18	2.1	8.3	6.5	6	15

短型小徑彈簧柱塞 LZ-206

Short small diameter spring plunger



商品介紹:

- 易安裝、好調整
- 用途:定位、鎖定

Product description:

- Easy to install and adjust
- Uses: Positioning, locking

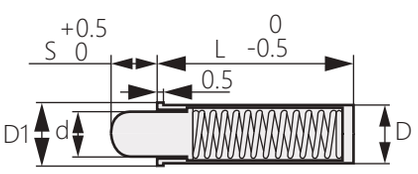

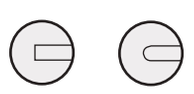

商品型號	凸銷形狀	主體	凸銷	彈簧	可使用溫度範圍
		材質	材質	材質	
LZ-206-1	平頭型	SUS303	SUS304	SUS304	-30°~140°C
LZ-206-2	球面型				

商品型號		D	S	d	D1	L	彈力(N)	
							MIN	MAX
LZ-206-1-1	LZ-206-2-1	1.5	1.5	0.5	2	9.5	0.49	0.98
LZ-206-1-2	LZ-206-2-2	2		1	2.5	8		
LZ-206-1-3	LZ-206-2-3	3	3	2	3.5	10		1.47
LZ-206-1-4	LZ-206-2-4	4		3	4.5		0.59	
LZ-206-1-5	LZ-206-2-5	5	4	4	5.5	11.5	0.64	1.96

Handles TG
把手

Handles TG
把手

Handles TG
把手

Handles TG
把手

Handles TG
把手



鋁合金U形把手

Aluminum alloy U-shaped handle

TG-549



商品介紹:

- 結構設計簡潔實用，有單節、雙節和三節規格
- 板內安裝，表面無安裝痕跡
- 表面處理:陽極黑色、陽極銀色
- 材質:鋁合金
- 用途:機箱機櫃、電櫃、小型機櫃等

Product description:

- Simple and practical structure design, single section, double and three sections.
- In-board installation, no mounting marks on the surface.
- Surface treatment: Anodizing black, anodizing silver
- Material: Aluminum alloy
- Uses: Chassis cabinet, electric cabinet, small cabinet, etc.

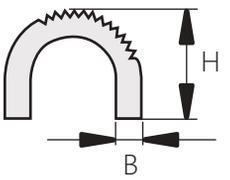

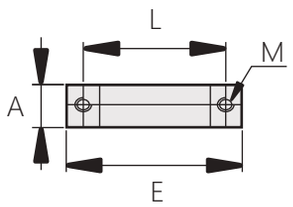

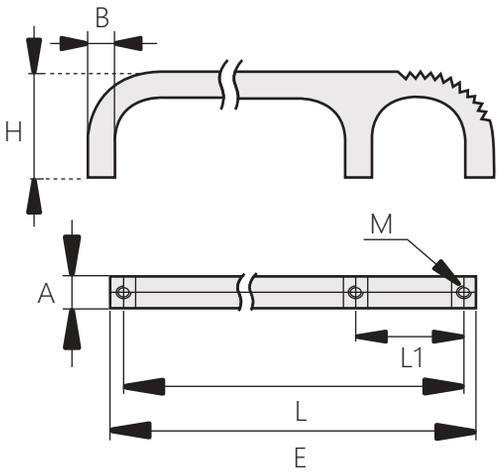

安裝示意圖

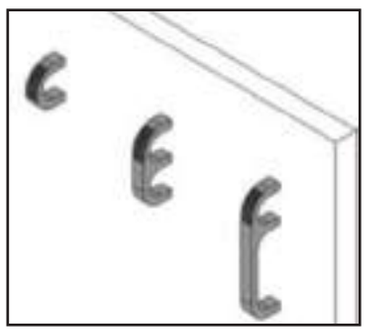

商品型號		L	A	L1	B	H	M	E	牙深
陽極黑色	陽極銀色								
TG-549-1-1	TG-549-2-1	28.5	9.5		6.4	27	M4	35	9.5
TG-549-1-2	TG-549-2-2	57		28.5				63.5	
TG-549-1-3	TG-549-2-3	79.5						86	
TG-549-1-4	TG-549-2-4	98.5						105	

組合式取手

TG-001

Recessed Pull



商品介紹:

- 快速安裝
- 材質:面板- 鋅合金、背蓋- ABS
- 適用板厚:0.8 ~ 15 mm

Product description:

- Quick installation
- Material: Panel-Zinc Alloy, Cover-ABS
- Applicable thickness: 0.8 ~ 15 mm

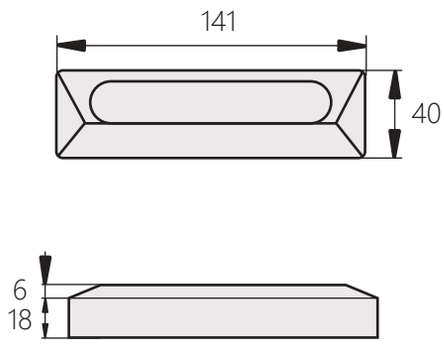

開孔尺寸

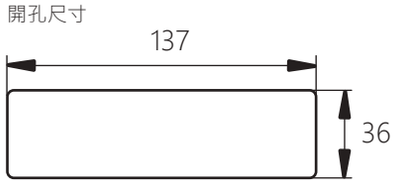

不鏽鋼取手

TG-002

Stainless Recessed Pull



商品介紹:

- 快速安裝
- 材質:不鏽鋼 304
- 適用板厚: 0.8 ~ 8 mm

Product description:

- Quick installation
- Material: Stainless Steel 304
- Applicable thickness: 0.8 to 8 mm

安裝示意圖

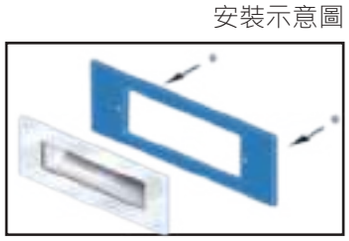

開孔尺寸

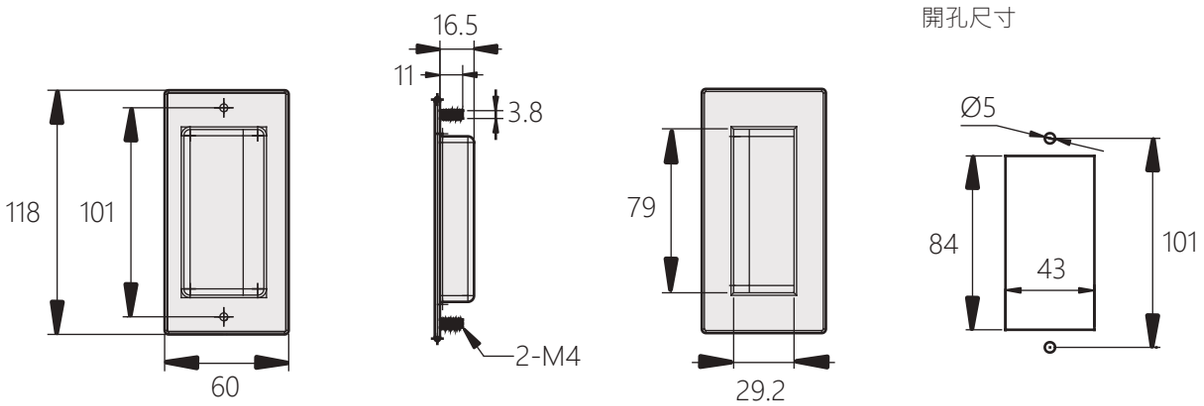

不鏽鋼內陷式暗抽手

TG-3305

SUS不鏽鋼 CAD

Stainless steel recessed concealed hand



商品介紹:
- 最大靜荷載:30KG
- 材質:不鏽鋼304
- 表面處理:鏡光,拉絲
- 用途:廚具、箱櫃、車輛、船舶、酒店設備、機械等

Product description:
- Maximum static load: 30KG
- Material: Stainless steel 304
- Surface treatment: Mirror polishing,Drawbench
- Uses: For kitchen utensils, cabinets, vehicles, ships, hotel equipment, machinery, etc.

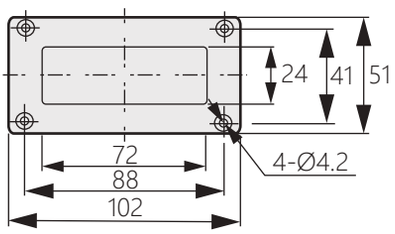

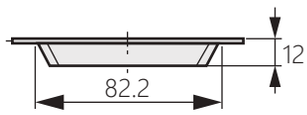

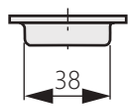

嵌入式砂面暗抽扣手

TG-2405

SUS不鏽鋼 CAD

Built-in sand surface dark buckle hand



商品介紹:
- 最大靜荷載:30KG
- 材質:不鏽鋼304
- 表面處理:鏡光,拉絲
- 用途:廚具、箱櫃、車輛、船舶、酒店設備、機械等

Product description:
- Maximum static load: 30KG
- Material: Stainless steel 304
- Surface treatment: Mirror polishing,Drawbench
- Uses: For kitchen utensils, cabinets, vehicles, ships, hotel equipment, machinery, etc.

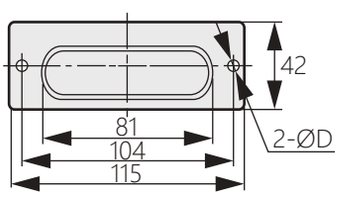

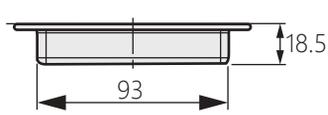



商品型號	D
TG-2405-1	5
TG-2405-2	0

不鏽鋼暗抽手

TG-2406

SUS不鏽鋼 CAD

Stainless steel dark hand



商品介紹:
- 最大靜荷載:30KG
- 材質:不鏽鋼304
- 表面處理:鏡光,拉絲
- 用途:廚具、箱櫃、車輛、船舶、酒店設備、機械等

Product description:
- Maximum static load: 30KG
- Material: Stainless steel 304
- Surface treatment: Mirror polishing,Drawbench
- Uses: For kitchen utensils, cabinets, vehicles, ships, hotel equipment, machinery, etc.

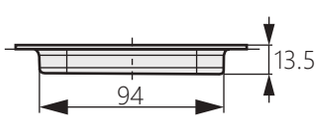



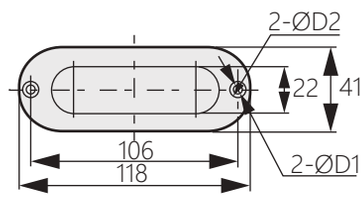

不鏽鋼暗抽手

TG-2409

Stainless steel dark hand



商品介紹:

- 最大靜荷載:30KG
- 材質:不鏽鋼304
- 表面處理:鏡光,拉絲
- 用途:廚具、箱櫃、車輛、船舶、酒店設備、機械等

Product description:

- Maximum static load: 30KG
- Material: Stainless steel 304
- Surface treatment: Mirror polishing,Drawbench
- Uses: For kitchen utensils, cabinets, vehicles, ships, hotel equipment, machinery, etc.

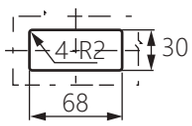

安裝開孔尺寸

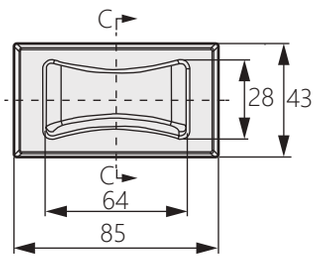

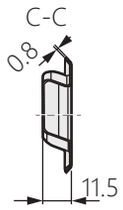

不鏽鋼暗抽手

TG-2410

Stainless steel dark hand



商品介紹:

- 最大靜荷載:30KG
- 材質:不鏽鋼304
- 表面處理:鏡光,拉絲
- 用途:廚具、箱櫃、車輛、船舶、酒店設備、機械等

Product description:

- Maximum static load: 30KG
- Material: Stainless steel 304
- Surface treatment: Mirror polishing,Drawbench
- Uses: For kitchen utensils, cabinets, vehicles, ships, hotel equipment, machinery, etc.

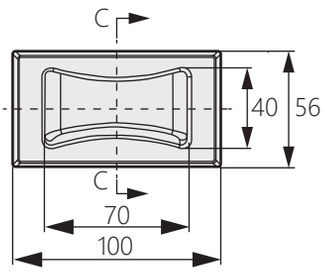



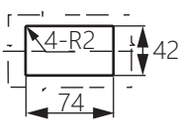

安裝開孔尺寸

不鏽鋼平面拉手

TG-625

Stainless steel flat handle



商品介紹:

- 嵌入式安裝，表面突起少
- 材質:不鏽鋼304
- 表面處理:拉絲拋光
- 用途:緊閉門、廚房設備、各種箱櫃等

Product description:

- Flush mount, less surface protrusion
- Material: Stainless steel 304
- Surface treatment: Brushed and polished
- Uses: Closed doors, kitchen equipment, various cabinets, etc.

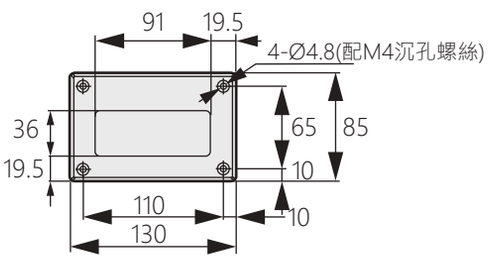

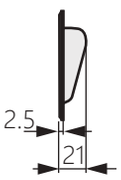

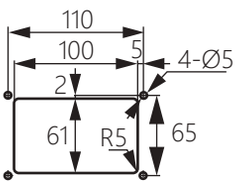

開孔尺寸

不鏽鋼內陷櫥櫃門抽手

TG-2401

Stainless steel recessed cabinet door



商品介紹:
- 最大靜荷載:30KG
- 材質:不鏽鋼304
- 表面處理:鏡光,拉絲
- 用途:廚具、箱櫃、車輛、船舶、酒店設備、機械等

Product description:
- Maximum static load: 30KG
- Material: Stainless steel 304
- Surface treatment: Mirror polishing,Drawbench
- Uses: For kitchen utensils, cabinets, vehicles, ships, hotel equipment, machinery, etc.

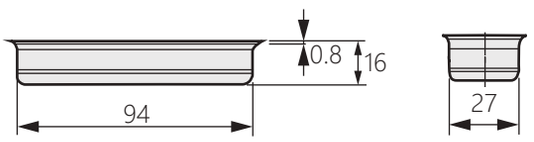

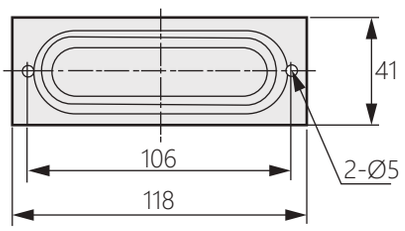

商品型號	安裝孔
TG-2401-1	直孔
TG-2401-2	無孔
TG-2401-3	沉孔

不鏽鋼暗抽手

TG-3303

Stainless steel dark hand



商品介紹:
- 最大靜荷載:30KG
- 材質:不鏽鋼304
- 表面處理:鏡光,拉絲
- 用途:廚具、箱櫃、車輛、船舶、酒店設備、機械等

Product description:
- Maximum static load: 30KG
- Material: Stainless steel 304
- Surface treatment: Mirror polishing,Drawbench
- Uses: For kitchen utensils, cabinets, vehicles, ships, hotel equipment, machinery, etc.

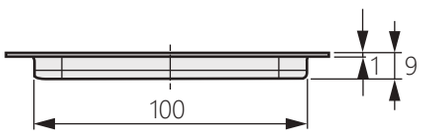



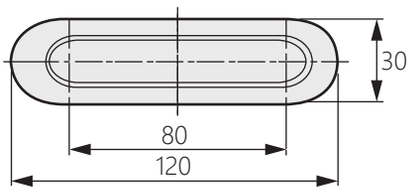

嵌入式帶蓋防刮暗抽手

TG-3304

Built-in anti-scratch darkening with cover



商品介紹:
- 最大靜荷載:30KG
- 材質:不鏽鋼304
- 表面處理:鏡光,拉絲
- 用途:廚具、箱櫃、車輛、船舶、酒店設備、機械等

Product description:
- Maximum static load: 30KG
- Material: Stainless steel 304
- Surface treatment: Mirror polishing,Drawbench
- Uses: For kitchen utensils, cabinets, vehicles, ships, hotel equipment, machinery, etc.

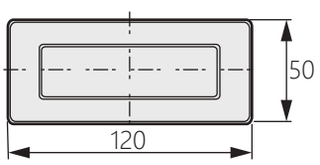

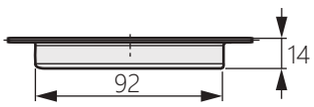

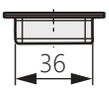

嵌入式砂面暗抽扣手

Built-in sand surface dark buckle hand

TG-2407

SUS 不鏽鋼 CAD



商品介紹:

- 最大靜荷載:30KG
- 材質:不鏽鋼304
- 表面處理:鏡光,拉絲
- 用途:廚具、箱櫃、車輛、船舶、酒店設備、機械等

Product description:

- Maximum static load: 30KG
- Material: Stainless steel 304
- Surface treatment: Mirror polishing,Drawbench
- Uses: For kitchen utensils, cabinets, vehicles, ships, hotel equipment, machinery, etc.

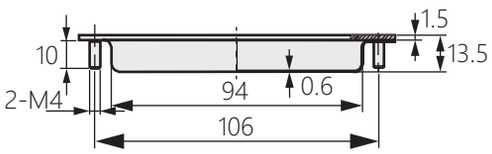



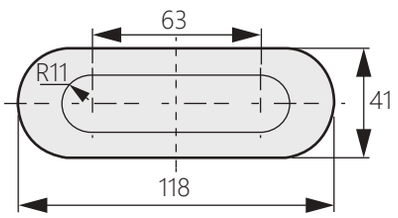

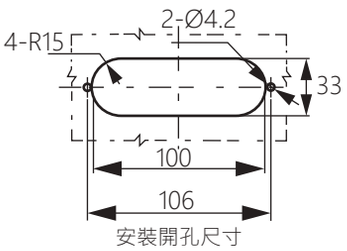

安裝開孔尺寸

不鏽鋼暗抽手

Stainless steel dark hand

TG-2408

SUS 不鏽鋼 CAD



商品介紹:

- 最大靜荷載:60KG
- 材質:不鏽鋼304
- 表面處理:鏡光,拉絲
- 用途:廚具、箱櫃、車輛、船舶、酒店設備、機械等

Product description:

- Maximum static load: 60KG
- Material: Stainless steel 304
- Surface treatment: Mirror polishing,Drawbench
- Uses: For kitchen utensils, cabinets, vehicles, ships, hotel equipment, machinery, etc.

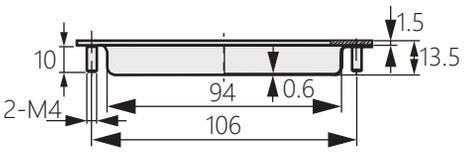



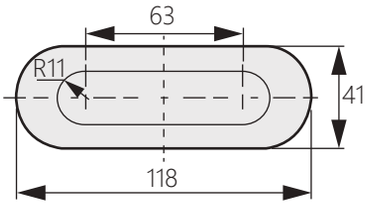

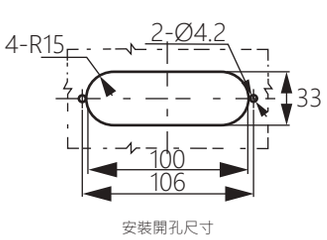

安裝開孔尺寸

嵌入式把手

Embedded pulls

TG-1191





商品介紹:

- 半光澤且具高級感的外觀，以及平整光滑的觸感
- 附件:螺母、彈簧墊圈、平墊圈、S.W
- 材質:冷軋不鏽鋼鋼板(SUS304)
- 表面處理:拉絲加工、化學研磨(TMP)
- 用途:海洋設備、港灣設備裝置、廚房設備、箱櫃、測量儀器、表面處理設備

Product description:

- Semi-gloss,high-grade exterior and smooth feel.
- Accessories:Nuts,spring washers and washers,plain washers,nuts.
- Material: Cold rolled stainless steel plate(SUS304)
- Surface treatment: Hairline finish
- Uses: Harbor facilities,kitchen equipment,cabinets, measuring equipment and surface processing equipment.

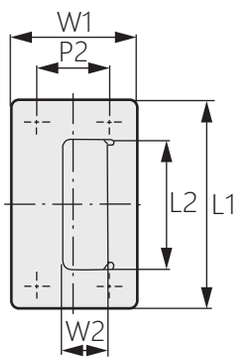

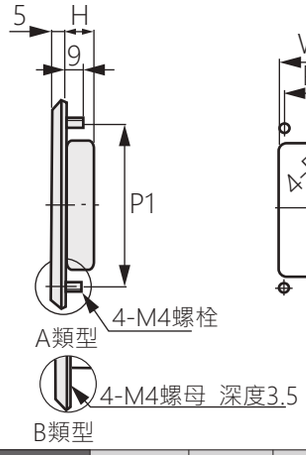

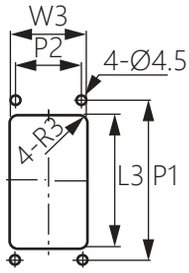

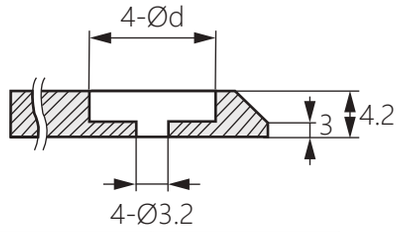

墊片型號	Ød
TH-1191-1	11.5
TH-1191-2	10.5
TH-1191-3	10.5

商品型號		L1	L2	L3	L4	W1	W2	W3	H	P1	P2	d
拉絲	化學研磨											
TG-1191-1-1	TG-1191-2-1	138	95	99	22	88	35	64	21	110	65	24
TG-1191-1-2	TG-1191-2-2	109.5	70	73	12	64	25	42	14.5	88	38	17
TG-1191-1-3	TG-1191-2-3	94	60	63	12	60	25	43	12	76	32	15

隱藏式酒店設備櫃門拉手

Hidden hotel equipment cabinet door handle

TG-2402



商品介紹:

- 最大靜荷載:30KG
- 材質:不鏽鋼304
- 表面處理:鏡光,拉絲
- 用途:廚具、箱櫃、車輛、船舶、酒店設備、機械等

Product description:

- Maximum static load: 30KG
- Material: Stainless steel 304
- Surface treatment: Mirror polishing,Drawbench
- Uses: For kitchen utensils, cabinets, vehicles, ships, hotel equipment, machinery, etc.

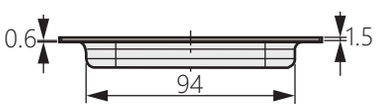

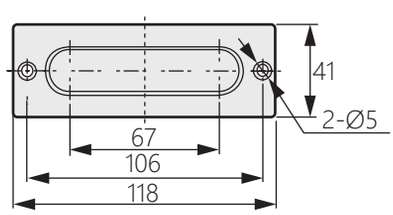

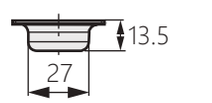

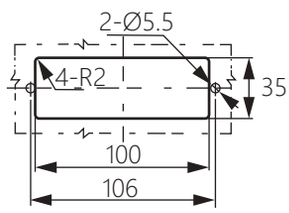

安裝開孔尺寸

切換開關取手

Toggle switch

TG-332



商品介紹:

- 適用在需要安全保護的設備上
- 允許機器直接監控閘門,例如:緊急停止啟動、重置、LED狀態顯示
- 材質:取手-鋁合金,取手座-鋅壓鑄,蓋子-塑膠
- 備註:可選無按鈕T0,一個按鈕T1,二個按鈕T2,例如:TG-332-1-T0

Product description:

- Applicable to equipment that needs security protection.
- Allow the machine to directly monitor the gate, Ex: emergency stop start, reset,LED status display.
- Material: Toride-Aluminum alloy, Toride seat-Zinc die-casting, Lid-Plastic.
- Note: Optional without button T0, one button T1, two buttons T2,Ex: TG-332-1B-T0

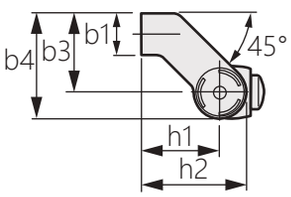

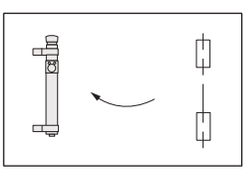

左側開門

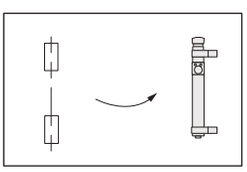

右側開門

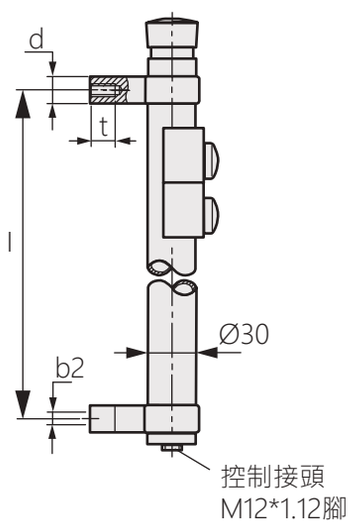

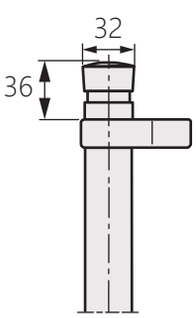

T0
無按鈕

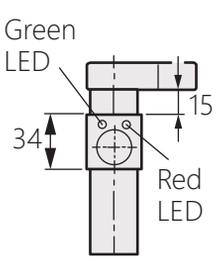

T1
1 個按鈕

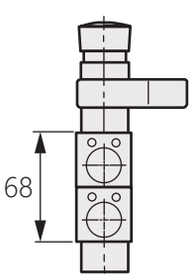

T2
2個按鈕

商品型號	l ±0.2	d	b1	b2	b3	b4	h1	h2	t
TG-332-1	200	M8	27	17	51	68	51	68	15
TG-332-2	300								

商品型號	取手	取手座	蓋子
TG-332-B	黑色	黑色	淺灰
TG-332-W	銀灰		

弓形把手

Plastic Handle

TG-738



商品介紹:

- 安裝方便簡單,提供多種尺寸
- 材質:尼龍加玻璃纖維

Product description:

- Installation is simple and convenient, providing a variety of sizes.
- Material: Nylon and glass fiber

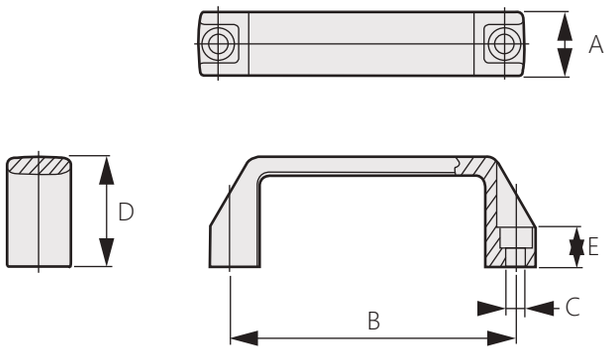

商品型號	A	B	C	D	E
TG-738-1	21	94	8.5	36	13
TG-738-2	26	117		41	15
TG-738-3	27	132		45	16
TG-738-4	28	179		50	17

切換開關取手

Toggle switch

TG-331



商品介紹:

- 適用在需要安全保護的設備上
- 允許機器直接監控閘門,例如:緊急停止啟動、重置、LED狀態顯示
- 材質:取手-鋁合金,取手座-鋅壓鑄,蓋子-塑膠
- 備註:可選無按鈕T0,一個按鈕T1,二個按鈕T2,例如:TG-331-1-T0

Product description:

- Applicable to equipment that needs security protection.
- Allow the machine to directly monitor the gate, Ex: emergency stop start, reset,LED status display.
- Material: Toride-Aluminum alloy, Toride seat-Zinc die-casting, Lid-Plastic.
- Note: Optional without button T0, one button T1, two buttons T2,Ex: TG-331-1B-T0

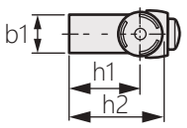

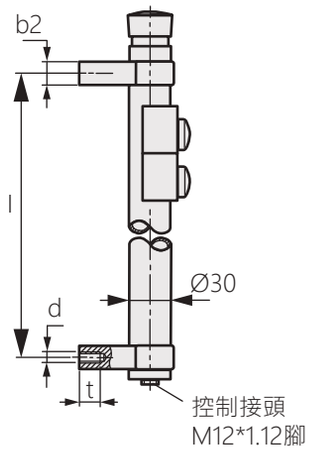

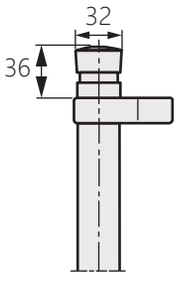

T0
無按鈕

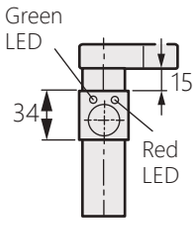

T1
1 個按鈕

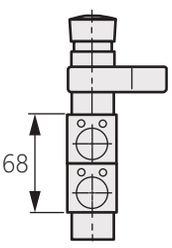

T2
2個按鈕

商品型號	l ±0.2	d	b1	b2	h1	h2	t
TG-331-1	200	M8	27	17	51	68	15
TG-331-2	300						

商品型號	取手	取手座	蓋子
TG-331-B	黑色	黑色	淺灰
TG-331-W	銀灰		

棒材把手

Round-Bar Handle

TG-300



商品介紹:

- 材質:不鏽鋼、鐵
- 表面處理:震動亮面、鍍鉻及黑色
- 備註:全尺寸皆有底座，如需底座請於型號加上〝Z〞

Product description:

- Material: Stainless steel, Iron
- Surface treatment: Vibrant bright, chrome and black
- Note: All sizes have a base, if you need a base, please add "Z"

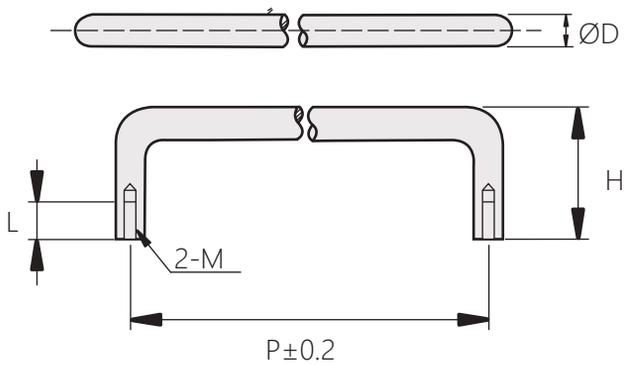

底座選配使用

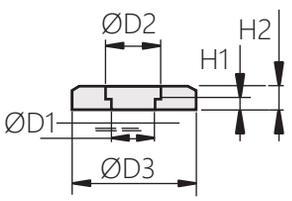

商品型號			H	P	D	M	L	H1	H2	D1	D2	D3
不鏽鋼	鐵											
TG-300-1-1	TG-300-2-1W	TG-300-2-1B	32	55	6.3	M4	8	1.2	2.5	4.2	6.5	10
TG-300-1-2	TG-300-2-2W	TG-300-2-2B		64								
TG-300-1-3	TG-300-2-3W	TG-300-2-3B		76								
TG-300-1-4	TG-300-2-4W	TG-300-2-4B		88								
TG-300-1-5	TG-300-2-5W	TG-300-2-5B		100								
TG-300-1-6	TG-300-2-6W	TG-300-2-6B	35	55	8	M5	10	1.3	3	5.2	8.1	12
TG-300-1-7	TG-300-2-7W	TG-300-2-7B		88								
TG-300-1-8	TG-300-2-8W	TG-300-2-8B		100								
TG-300-1-9	TG-300-2-9W	TG-300-2-9B		120								
TG-300-1-10	TG-300-2-10W	TG-300-2-10B		136								
TG-300-1-11	TG-300-2-11W	TG-300-2-11B	40	88	10	M6	12	1.5	4.5	6.2	10.1	15
TG-300-1-12	TG-300-2-12W	TG-300-2-12B		100								
TG-300-1-13	TG-300-2-13W	TG-300-2-13B		120								
TG-300-1-14	TG-300-2-14W	TG-300-2-14B		150								
TG-300-1-15	TG-300-2-15W	TG-300-2-15B		180								
TG-300-1-16			43	200		M5						
TG-300-1-17				235								

*如需底座請於型號加上〝Z〞,例如:TG-300-1-1Z

折疊把手

Folding Handle

TG-511



商品介紹:

- 圓形把手、帶底座圓形把手
- 材質:不鏽鋼、鐵
- 表面處理:
  TG-511-1:鐵(1=鉻)
  TG-511-2:不鏽鋼(4=鏡光)
- 備註:全尺寸皆有底座，如需底座請於型號加上〝Z〞

Product description:

- A round handle and round handle with a base
- Material: Stainless steel, Iron
- Surface treatment:
  TG-511-1: Iron (1 = chromium)
  TG-511-2: Stainless steel (4=mirror)
- Note: All sizes have a base, if you need a base, please add "Z"

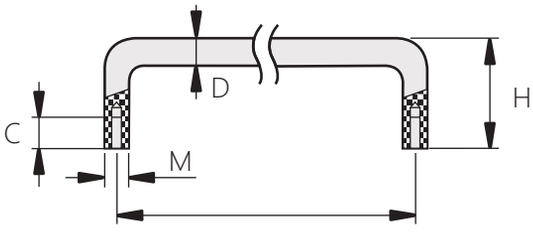

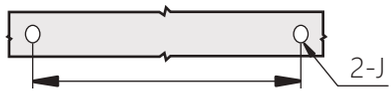

L 開孔尺寸

底座選配使用

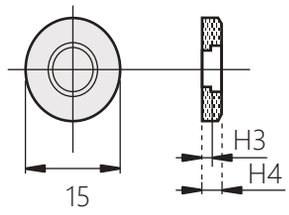

商品編號		L	D	H	M	C	J	H3	H4
不鏽鋼	鐵								
TG-511-1-1	TG-511-2-1	40	Ø6	22	M4	7	Ø4.5	1.5	3.5
TG-511-1-2	TG-511-2-2	60							
TG-511-1-3	TG-511-2-3	55		26		8			
TG-511-1-4	TG-511-2-4	60							
TG-511-1-5	TG-511-2-5	82							
TG-511-1-6	TG-511-2-6	70		32		10			
TG-511-1-7	TG-511-2-7	80							
TG-511-1-8	TG-511-2-8	90							
TG-511-1-9	TG-511-2-9	100							
TG-511-1-10	TG-511-2-10	102							
TG-511-1-11	TG-511-2-11	122							
TG-511-1-12	TG-511-2-12	138							
TG-511-1-13	TG-511-2-13	48		43		8			
TG-511-1-14	TG-511-2-14	66							
TG-511-1-15	TG-511-2-15	68	Ø7	30	M5	8	Ø5.5		
TG-511-1-16	TG-511-2-16	60	Ø8	32		10			
TG-511-1-17	TG-511-2-17	90							
TG-511-1-18	TG-511-2-18	100							

*如需底座請於型號加上〝Z〞,例如:TG-511-1-1-Z

折疊把手

Folding Handle

TG-511

RoHS SUS 不鏽鋼 CAD

商品編號		L	D	H	M	C	J	H3	H4
不鏽鋼	鐵								
TG-511-1-19	TG-511-2-19	120	Ø8	32	M5	10	Ø5.5	1.5	3.5
TG-511-1-20	TG-511-2-20	75		40					
TG-511-1-21	TG-511-2-21	150							
TG-511-1-22	TG-511-2-22	48		45	M4	8	Ø4.5		
TG-511-1-23	TG-511-2-23	66							
TG-511-1-24	TG-511-2-24	90	Ø9	32	M5	10	Ø5.5		
TG-511-1-25		100		30		8			
TG-511-1-26	TG-511-2-25			32		10	Ø5.5	1.5	3.5
TG-511-1-27				50		8			
TG-511-1-28	TG-511-2-26	135		32		10	Ø5.5	1.5	3.5
TG-511-1-29	TG-511-2-27	155							
TG-511-1-30	TG-511-2-28	119		40					
TG-511-1-31	TG-511-2-29	149							
TG-511-1-32	TG-511-2-30	160							
TG-511-1-33	TG-511-2-31	100		50					
TG-511-1-34	TG-511-2-32	80	Ø10	37	M5	10	Ø5.5		
TG-511-1-35	TG-511-2-33			60					
TG-511-1-36		88		42		12		1	2.2
TG-511-1-37	TG-511-2-34	100		37		10	Ø5.5	1.5	3.5
TG-511-1-38	TG-511-2-35			60					
TG-511-1-39				42		12		1	2.2
TG-511-1-40	TG-511-2-36	110		37		10	Ø5.5	1.5	3.5
TG-511-1-41				40	M6	8			
TG-511-1-42	TG-511-2-37					10	Ø7	1.5	3.5
TG-511-1-43	TG-511-2-38			60	M5		Ø5.5		
TG-511-1-44	TG-511-2-39	120		37					
TG-511-1-45				40	M6	8			
TG-511-1-46	TG-511-2-40					10	Ø7	1.5	3.5
TG-511-1-47				42		12		1	2.2
TG-511-1-48	TG-511-2-41			60	M5	10	Ø5.5	1.5	3.5
TG-511-1-49	TG-511-2-42	128		35	M4		Ø4.5		
TG-511-1-50	TG-511-2-43	160		35					
TG-511-1-51	TG-511-2-44			37	M5		Ø5.5		
TG-511-1-52	TG-511-2-45			60					
TG-511-1-53		180		42		12		1	2.2
TG-511-1-54	TG-511-2-46	200		37	M5	10	Ø5.5	1.5	3.5
TG-511-1-55	TG-511-2-47			60					
TG-511-1-56				42		12		1	2.2
TG-511-1-57		235							
TG-511-1-58	TG-511-2-48	150	Ø12	50	M8	10	Ø9	1.5	3.5
TG-511-1-59						12			
TG-511-1-60	TG-511-2-49			52		10	Ø9	1.5	3.5
TG-511-1-61	TG-511-2-50			87					

*如需底座請於型號加上〝Z〞,例如:TG-511-1-1-Z

塑膠拉手
Plastic handle

TG-4001



商品介紹:
- 隱藏式安裝，配有NBR防水墊
- M5螺絲固定，承受拉力性能強
- 材質:塑膠PA6
- 表面處理:黑色
- 用途:工業箱體、機箱機櫃、行業設備等
- 備註:防水墊是包裹著拉手邊緣的，起防水功能

Product description:
- Concealed installation with NBR waterproof pad
- M5 screws, strong tensile strength
- Material: Plastic PA6
- Surface treatment: Black
- Uses: Industrial cabinets, cabinets, industrial equipment, etc.
- Note: The waterproof pad is wrapped around the edge of the handle and is waterproof.

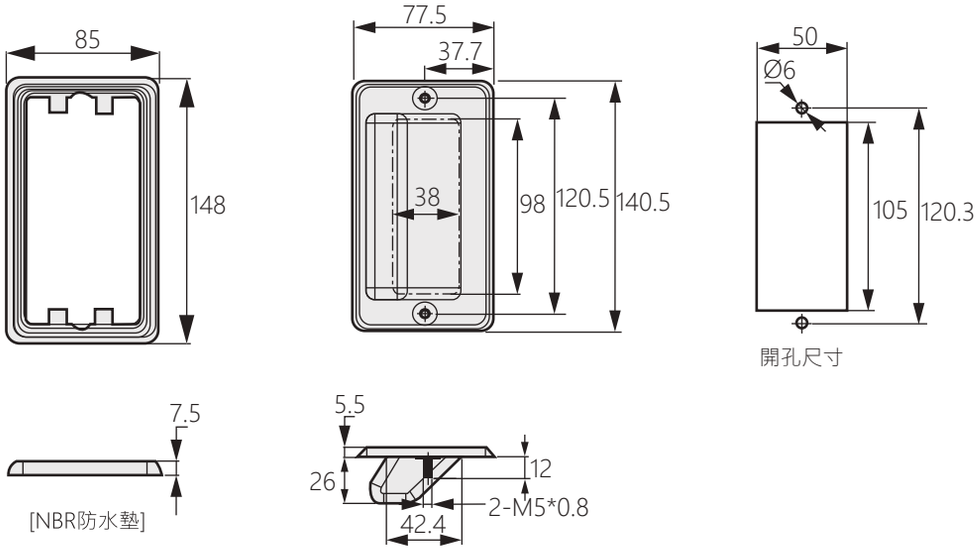

嵌入式塑膠拉手
Embedded plastic handle

TG-1029



商品介紹:
- 船型結構，簡潔不佔用太多空間
- 材質:橡膠
- 表面處理:黑色
- 用途:機箱機櫃、提拉門設備等

Product description:
- Ship-like structure, simple and does not take up much space
- Material: Rubber
- Surface treatment: Black
- Uses: Chassis cabinets, sliding door equipment, etc.

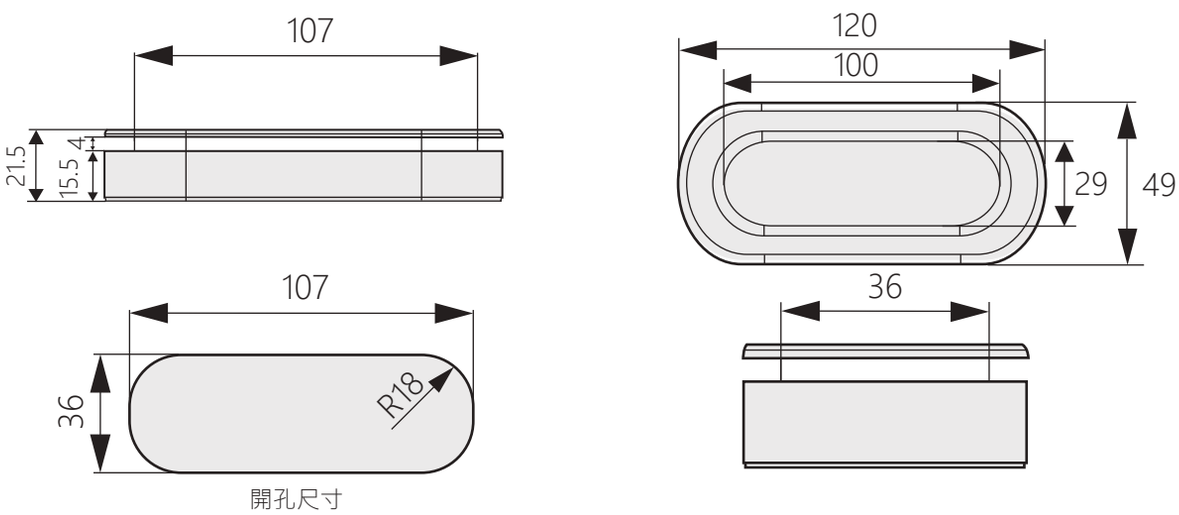

嵌入式取手
Embedded Pull

TG-004



商品介紹:
- 快速安裝
- 材質:工程塑料ABS

Product description:
- Quick installation
- Material: ABS

商品型號	表面顏色
TG-004-1	黑色
TG-004-2	白色

開孔尺寸

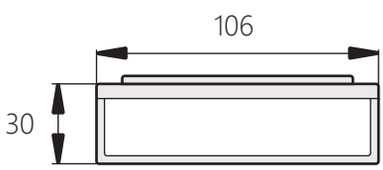

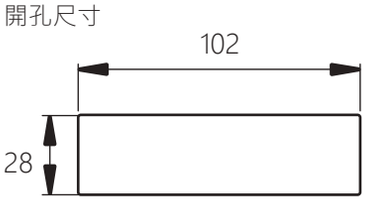

適用板厚 0.8 ~ 1

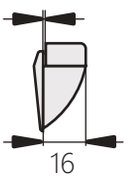

組合式取手
Flush Pull

TG-005



商品介紹:
- 可提供方便的間距來美化重型門板或是抽屜。雙片式設計夾住面板，可提供足夠的使用空間。而從面板表面僅只有最小的凸出，附帶6 號BT自攻螺絲
- 材質:ABS

Product description:
- Can provide a convenient grip to dress up any heavier door or drawer application. Two-piece recessed cup design sandwiches the door panel to provide ample space for a full-handed, two-knuckle-deep grip, with minimal protrusion from front of panel
- Material: ABS

剖面圖- H

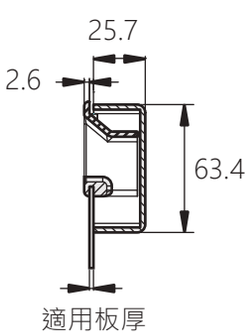

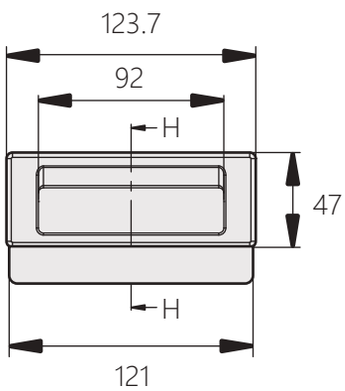

開孔尺寸

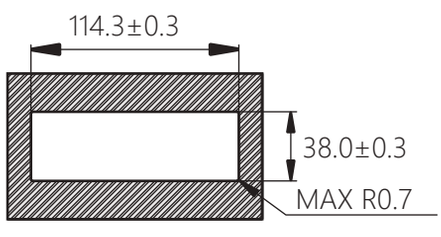

安裝示意圖

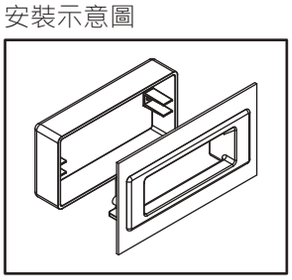

鋅合金U型把手

Zinc Alloy U-shaped Handle

TG-518



商品介紹:
- 外型美觀，安裝方便
- 材質:鋅合金
- 表面處理:銀色塗裝
- 用途:機櫃、配分電盤、機械設備

Product description:
- Beautiful appearance and easy installation
- Material: Zinc alloy
- Surface treatment: Silver coating
- Uses: Cabinets, distribution boards, mechanical equipment

[TG-518-1]

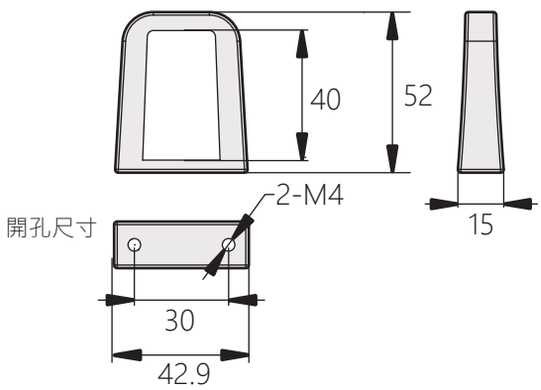

[TG-518-2]

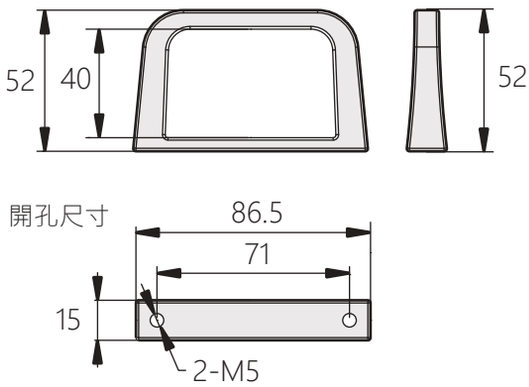

嵌入式取手

Embedded Pull

TG-746



商品介紹:
- 安裝時只需插入面板並按下固定夾即可，無需工具，任何人皆能簡單安裝
- 材質:ABS

Product description:
- Can be easily fitted by anyone without the use of tools; simply insert into the panel and push in the setting clip
- Material: ABS

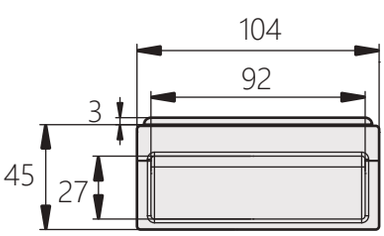



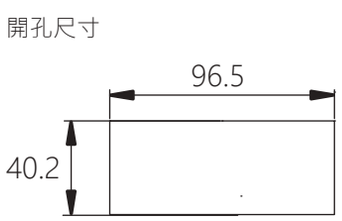

商品型號	適用板厚	荷重(Kg)
TG-746-1	1.2	30
TG-746-2	1.6	
TG-746-3	2	

安裝示意圖

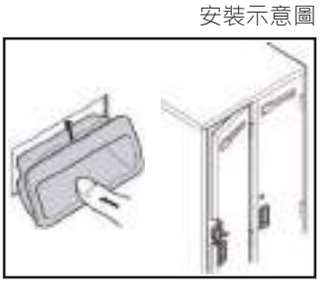

隱藏式塑膠把手

TG-006-1

Plastic handle pocket pull



商品介紹:

- 可實現單點式安裝，表面質感好
- 材質:塑膠ABS
- 表面處理:黑色
- 用途:機箱機櫃、辦公設備、測量設備等

Product description:

- One-touch installation is realizable, with wonderful surface quality.
- Material: ABS
- Surface treatment: Black
- Uses: Chassis cabinet, office equipment, test chamber.

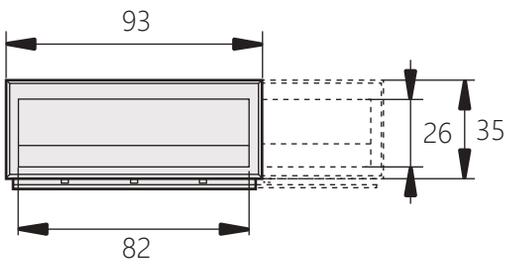

開孔尺寸

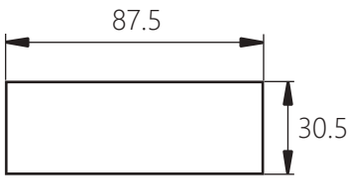

適用板厚 1.2-2

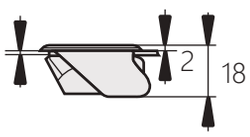

安裝示意圖

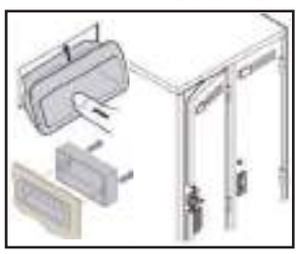

隱藏式塑膠把手

TG-006-2

Plastic handle pocket pull



商品介紹:

- 可實現單點式安裝，表面質感好
- 材質:塑膠ABS
- 表面處理:黑色
- 用途:機箱機櫃、辦公設備、測量設備等

Product description:

- One-touch installation is realizable, with wonderful surface quality.
- Material: ABS
- Surface treatment: Black
- Uses: Chassis cabinet, office equipment, test chamber.

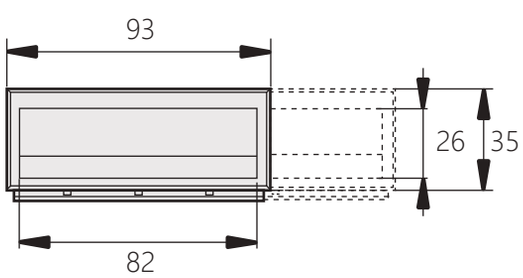

適用板厚 0.6-1.2

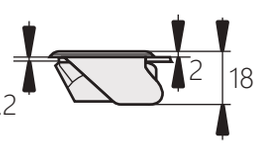

開孔尺寸

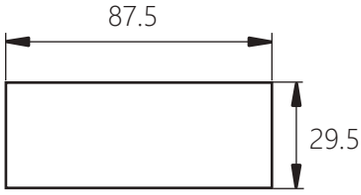

安裝示意圖

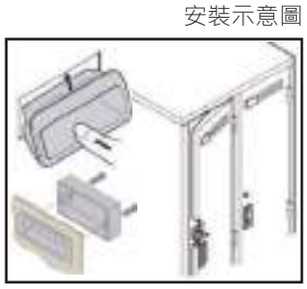

弓形拉手

Bow handle

TG-739



商品介紹:
- 接手強度高，韌性好，安裝方便
- 材質:鋁合金、塑料
- 表面處理:黑色烤漆
- 用途:烤箱、試驗箱、自動化設備等

Product description:
- High strength, good toughness and easy installation
- Material: Aluminum alloy, plastic
- Surface treatment: Black paint
- Uses: Oven, test box, automation equipment, etc.

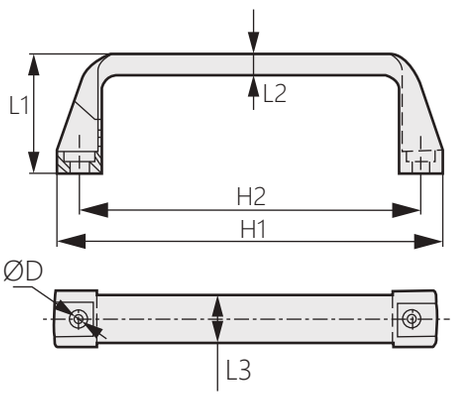

商品型號	材質	L1	L2	L3	H1	H2	D
TG-739-1-1	鋁合金	38	7	20	109	90	6.5
TG-739-1-2	塑膠						
TG-739-2-1	鋁合金	41	8	24	138	118	8.5
TG-739-2-2	塑膠						
TG-739-3-1	鋁合金	51	10	27	200	180	8.5
TG-739-3-2	塑膠						

醫療器械拉手

Medical device handle

TG-053



商品介紹:
- 材質:不鏽鋼（SUS304）
- 表面處理:鏡面拋光
- 用途:自動化設備，醫療器械

Product description:
- Material: Stainless steel (SUS304)
- Surface treatment: Mirror polishing
- Uses: Automation equipment, medical equipment

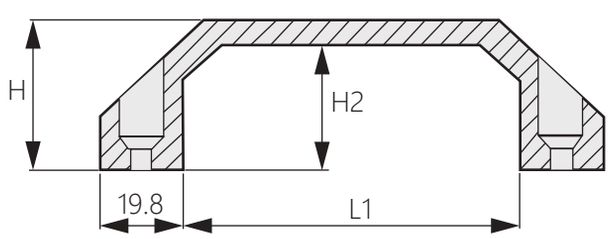

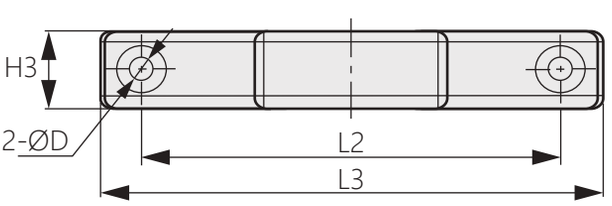

商品型號	L1	L2	L3	H1	H2	H3	D
TG-053-1	80.4	100	120	35.6	29.9	18.7	5.3
TG-053-2	130.4	150	170	50	42.2	25.7	6.5

塑膠拉手

TG-1024

Plastic handle



商品介紹:

- 安裝方便快捷，承受拉力強度高
- 內嵌銅材質內螺紋，板內安裝
- 材質:塑膠、銅
- 表面處理:黑色塑膠
- 用途:機箱、音箱設備、電櫃箱

Product description:

- Easy and fast installation, high tensile strength
- Built-in copper internal thread, installed in the board
- Material: Plastic, copper
- Surface treatment: Black plastic
- Uses: Chassis, speaker equipment, electrical cabinet box.

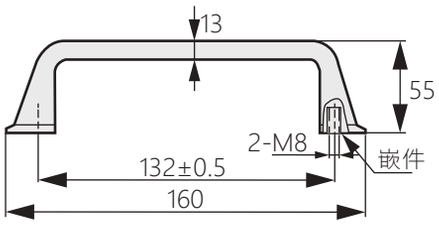



不鏽鋼拉手

TG-045

stainless steel handle



商品介紹:

- 材質:不鏽鋼（SUS304）
- 表面處理:鏡面拋光
- 用途:工業門，自動化設備

Product description:

- Material: Stainless steel (SUS304)
- Surface treatment: Mirror polishing
- Uses: Industrial doors, automation equipment

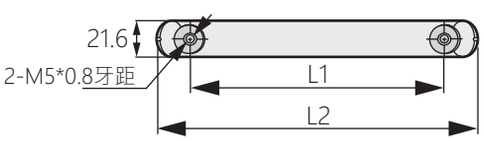

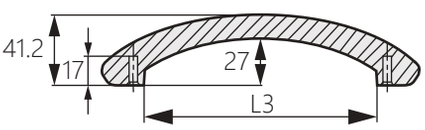

商品型號	L1	L2	L3
TG-045-1	38	7	20
TG-045-2			

側門裝拉手

TG-048

Side door handle



商品介紹:

- 門邊安裝，符合特殊要求
- 材質:不鏽鋼（SUS304）
- 表面處理:鏡面拋光
- 用途:自動化設備，戶外機櫃

Product description:

- Door-side installation to meet special requirements
- Material: Stainless steel (SUS304)
- Surface treatment: Mirror polishing
- Uses: Automation equipment, outdoor cabinet

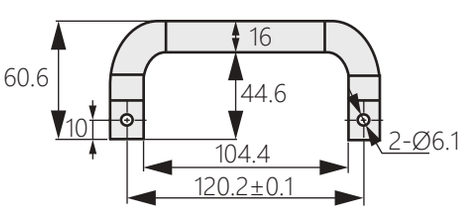



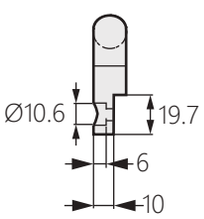

鋁合金橢圓管型把手

Aluminum Round Bar Handle

TG-692

CAD



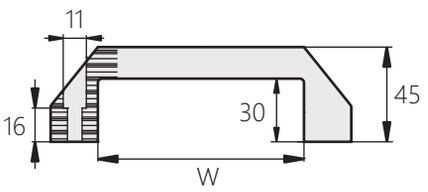



商品介紹:

- 安裝方便簡單，提供多種尺寸
- 材質:圓管- 鋁合金、支座- 黑色尼龍玻璃纖維
- 表面處理:銀色
- 用途:機櫃、食品設備、工業用機櫃、工業機械、機床、金屬切割、醫療

Product description:

- Installation is simple and convenient, providing a variety of sizes
- Material: Round Bar-Aluminum ; Seat-Nylon Glass Fiber(Black)
- Surface treatment: Silver
- Uses: Communication Equipment, Food Equipment, Industrial Enclosures, Industrial Machinery, Machine Tools and Metal Cutting, Medical

商品型號	L	W
TG-692-1	120	100
TG-692-2	140	120
TG-692-3	170	150

三合一組合式取手

Recessed Pull

TG-003

CAD



商品介紹:

- 快速安裝
- 材質:工程塑料ABS

Product description:

- Quick installation
- Material: ABS

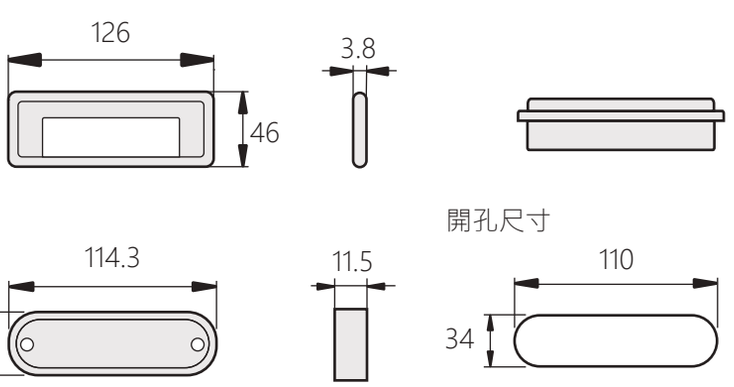

安裝示意圖



鋁合金圓管型把手

TG-693

Aluminum Round Bar Handle



商品介紹:

- 安裝方便簡單，提供多種尺寸
- 材質:圓管- 鋁合金、支座- 黑色尼龍玻璃纖維、螺栓- 鐵
- 表面處理:銀色、黑色
- 用途:機櫃、食品設備、工業用機櫃、工業機械、機床、金屬切割、醫療

Product description:

- Installation is simple and convenient, providing a variety of sizes
- Material: Round Bar-Aluminum ; Seat-Nylon Glass Fiber(Black) ; Bolt-Steel
- Surface treatment: Silver、Black
- Uses: Communication Equipment, Food Equipment, Industrial Enclosures, Indust

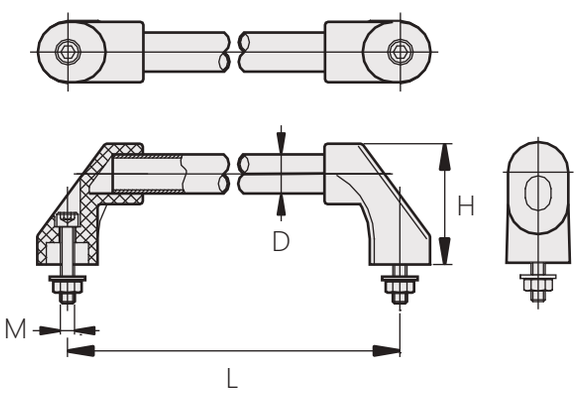

商品型號		D	L	C	H
黑色	銀色				
TG-693-1-1	TG-693-2-1	30	200	M10	80
TG-693-1-2	TG-693-2-2		300		
TG-693-1-3	TG-693-2-3		350		
TG-693-1-4	TG-693-2-4		400		
TG-693-1-5	TG-693-2-5		500		
TG-693-1-6	TG-693-2-6		600		
TG-693-1-7	TG-693-2-7		700		

鋁合金方管型把手

TG-691

Aluminum Square Bar Handle



商品介紹:

- 安裝方便簡單， 提供多種尺寸
- 材質:圓管- 鋁合金、支座- 黑色尼龍玻璃纖維、螺栓- 鐵
- 表面處理:銀色、黑色
- 用途:機櫃、食品設備、工業用機櫃、工業機械、機床、金屬切割、醫療

Product description:

- Installation is simple and convenient, providing a variety of sizes
- Material: Round Bar-Aluminum ; Seat-Nylon Glass Fiber(Black) ; Bolt-Steel
- Surface treatment: Silver、Black
- Uses: Communication Equipment, Food Equipment, Industrial Enclosures, Industrial Machinery, Machine Tools and Metal Cutting, Medical

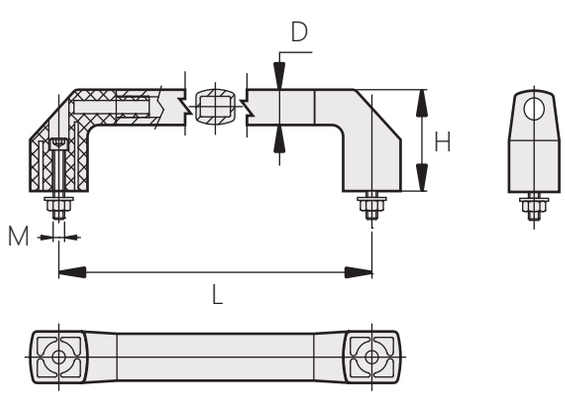

商品型號		D	L	M	H
黑色	銀色				
TG-691-1-1	TG-691-2-1	24 X 27	180	M8	69
TG-691-1-2	TG-691-2-2		200		
TG-691-1-3	TG-691-2-3		250		
TG-691-1-4	TG-691-2-4		300		
TG-691-1-5	TG-691-2-5		350		
TG-691-1-6	TG-691-2-6		400		
TG-691-1-7	TG-691-2-7		500		
TG-691-1-8	TG-691-2-8		600		
TG-691-1-9	TG-691-2-9		700		

斜面承重拉手

Beveled handle

TG-223



商品介紹:

- 安裝座斜度設計，亦可用於推拉的門
- 材質:鋅合金座子，鋁型圓棒
- 表面處理:烤漆銀、黑、噴砂氧化銀、黑
- 用途:公共汽車、鐵道車輛、工業設備箱體

Product description:

- Installation seat slope design, can also be used for sliding doors
- Material: Zinc alloy seat, Aluminum round rod
- Surface treatment: Paint silver, black,Sandblasted silver oxide, black.
- Uses: Buses, railway vehicles, industrial equipment boxes

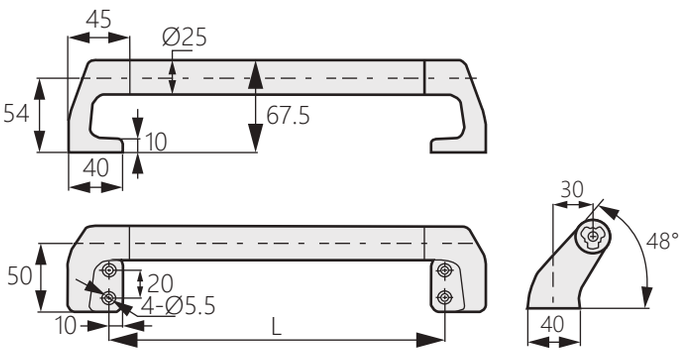

商品型號	L1	座子顏色	鋁棒顏色
TG-223-1-1	200	銀色	銀色
TG-223-1-2			黑色
TG-223-1-3		黑色	銀色
TG-223-1-4			黑色
TG-223-2-1	300	銀色	銀色
TG-223-2-2			黑色
TG-223-2-3		黑色	銀色
TG-223-2-4			黑色
TG-223-3-1	500	銀色	銀色
TG-223-3-2			黑色
TG-223-3-3		黑色	銀色
TG-223-3-4			黑色

鋁棒拉手

IAluminum rod handle

TG-225



商品介紹:

- 材質:鋁合金
- 表面處理:陽極銀色
- 用途:自動化設備、數控機床

Product description:

- Material: Aluminum alloy
- Surface treatment: Anodized silver
- Uses: Automation equipment, CNC machine tools

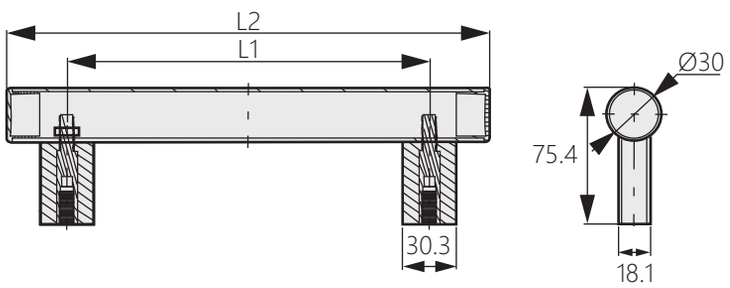

商品型號	L1	L2
TG-225-1	200	266
TG-225-2	300	366
TG-225-3	500	566

嵌入式拉手

Embedded handle

TG-1026



商品介紹:

- 隱藏式安裝，表面無安裝痕跡
- 安裝方便快捷
- 材質:塑膠
- 表面處理:塑膠黑色、灰色
- 用途:工業烤箱、試驗箱、自動化設備等

Product description:

- Concealed installation, no installation marks on the surface.
- Easy and fast installation
- Material: Plastic
- Surface treatment: Plastic black, gray
- Uses: Industrial ovens, test chambers, automation equipment, etc.

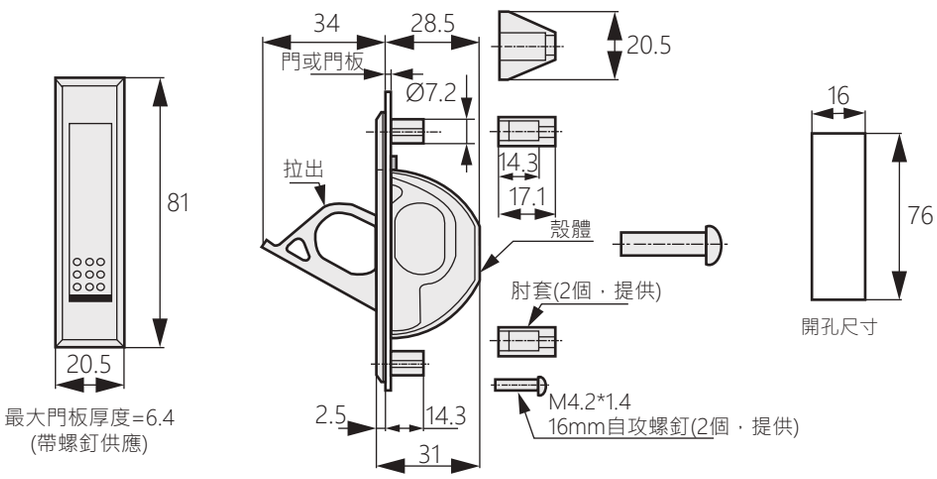

商品型號	表面處理
TG-1026B	黑色
TG-1026W	灰色

橢圓形電木拉手

Oval Bakelite Handle

TG-1040



商品介紹:

- 安裝用螺絲孔使用黃銅製嵌入五金件（鋼材）
- 材質:電木、鋼材質
- 表面處理:黑色
- 用途:通信設備、配分電盤、冷庫、機箱機櫃

Product description:

- Brass insert hardware (steel) for mounting screw holes
- Material: Bakelite, Steel
- Surface treatment: Black
- Uses: Communication equipment, distribution boards, cold storage, chassis cabinets.

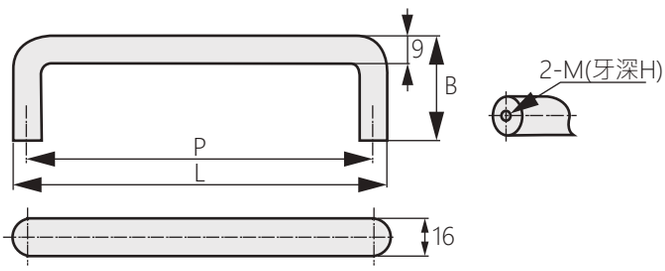

商品型號	P	L	B	M	H
TG-1040-1	90	108	51	M6	12
TG-1040-2	120	139	55	M8	16
TG-1040-3	180	199	60		
TG-1040-4	240	259	60		
TG-1040-5	320	339	60		
TG-1040-6	400	419	70		

翻轉把手

Flip handle

TG-174



商品介紹:

- 隱藏埋入式安裝，外觀簡潔大方
- 安裝方便快捷，承受拉力大
- 材質:鋅合金
- 表面處理:噴砂-鍍鉻
- 用途:控制箱、電控箱、機械門鎖

Product description:

- Concealed embedded installation, simple and elegant appearance
- Easy to install and withstand large pulling forces
- Material: Zinc alloy
- Surface treatment: Sand Blasting-chrome plating
- Uses: Control box, electric control box, mechanical door lck

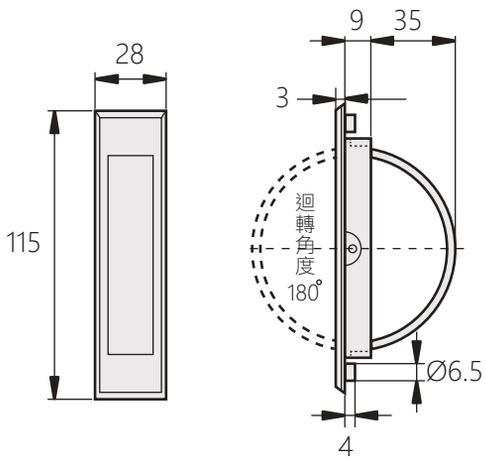

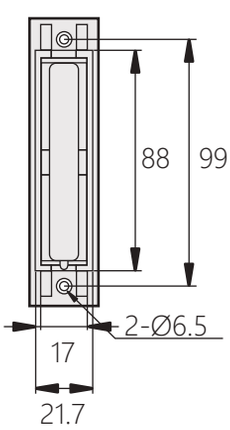

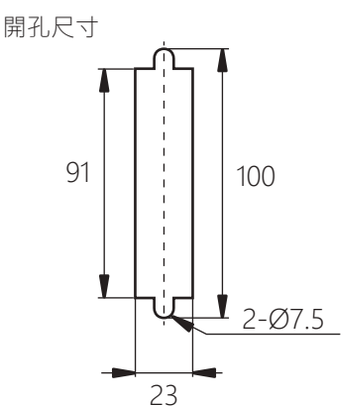

鋁合金把手

Aluminum Grip Handle

TG-745



商品介紹:

- 安裝方便簡單， 提供多種尺寸
- 表面處理:陽極銀色、陽極黑色
- 材質:鋁合金
- 用途:機櫃、食品設備、工業用機櫃、工業機械、機床和金屬切割、醫療

Product description:

- Installation is simple and convenient, providing a variety of sizes
- Surface treatment:
  Anodizing Standard Silver
  Anodizing Standard Black
- Material: Aluminum
- Uses: Communication Equipment, Food Equipment, Industrial Enclosures, Industrial Machinery, Machine Tools and Metal Cutting, Medical

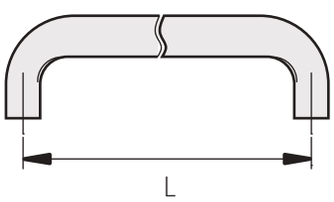

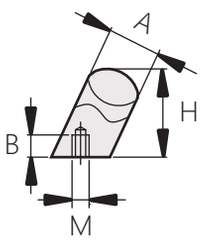

表面處理		A	L	M	H	B
陽極黑色	陽極銀色					
TG-745-1-1	TG-745-2-1	26	128	M8	54	12
TG-745-1-2	TG-745-2-2		160			

不鏽鋼U 型把手

TG-8080

Stainless Steel Draw Pull



商品介紹:

- 在嚴苛的環境中提供出色的耐久性以及抗腐蝕能力
- 材質:不鏽鋼 304
- 表面處理:鏡面拋光
- 用途:機櫃、食品設備、工業用機櫃、工業機械、機床和金屬切割、醫療、販賣機

Product description:

- Provides superior durability and corrosion-resistance in demanding environments
- Material: Cast Stainless Steel 304
- Surface treatment: Mirror surface buffing
- Use: Communication Equipment, Food Equipment, Industrial Enclosures, Industrial Machinery, Machine Tools and Metal Cutting, Medical, Vending Machines

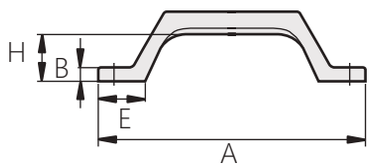

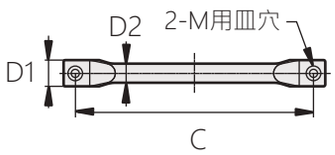

商品型號	E	A	D1	D2	B	H	C	2-M
TG-8080-1	30	220	22	16	9	30	200	M6
TG-8080-2		170					150	
TG-8080-3	20	116	18	12	6	20	100	M4
TG-8080-4		96					80	

安裝示意圖



鋁合金圓管型把手

TG-735

Aluminum Round Bar Handle



商品介紹:

- 安裝方便簡單, 提供多種尺寸
- 材質:圓管- 鋁合金、支座- 黑色尼龍玻璃纖維、螺栓-鐵
- 表面處理:銀色
- 用途:機櫃、食品設備、工業用機櫃、工業機械、機床和金屬切割、醫療

Product description:

- Installation is simple and convenient, providing a variety of sizes
- Material:Round Bar-Aluminum ; Seat-Nylon Glass Fiber(Black) ; Bolt-Steel
- Surface treatment: Silver
- Use: Communication cubicle, Food Equipment, Industrial Enclosures, Industrial Machinery, Machine Tools and Metal Cutting, Medical

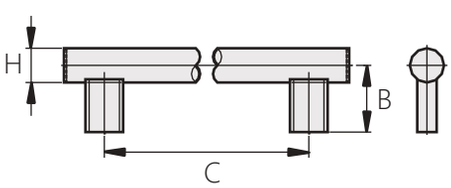

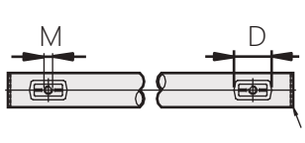

蓋子

商品型號	H	C	M	B	D
TG-735-1	30	200	M8	60	35
TG-735-2		250			
TG-735-3		300			
TG-735-4		400			
TG-735-5		500			
TG-735-6		600			

彈簧復位拉手

Bow handle

TG-516-4



商品介紹:

- 表面為陽極，外表美觀大方
- 把手截面呈橢圓形，穩定性好，方便握持，手感好
- 材質:鋁合金
- 表面處理:陽極黑色、陽極銀色
- 用途:自動化設備、網絡機櫃、電腦機箱等

Product description:

- The surface is anode, beautiful appearance
- The cross section of the handle is oval, good stability, easy to hold and feel good
- Material: Aluminum alloy
- Surface treatment: Anodized black, anodized silver
- Uses: Automation equipment, network cabinets, computer cases, etc.

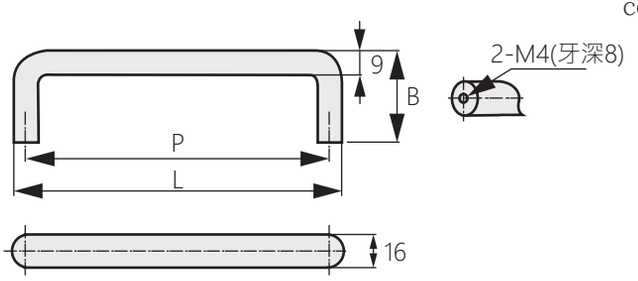

商品型號		P	L	B
黑色	銀色			
TG-516-4-1B	TG-516-4-1W	50	59	25
TG-516-4-2B	TG-516-4-2W	100	109	35
TG-516-4-3B	TG-516-4-3W	150	159	38
TG-516-4-4B	TG-516-4-4W	200	209	45

取手

Toride

TG-1054



商品介紹:

- 取手形狀為U型
- 材質:PA+玻纖
- 表面處理:黑色

Product description:

- The shape of the hand is U-shaped
- Material: Stainless Steel 304
- Surface treatment: Black

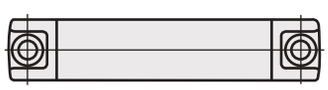

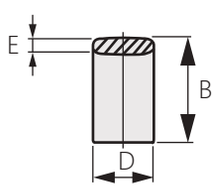

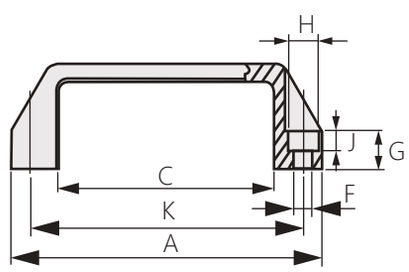

示意圖

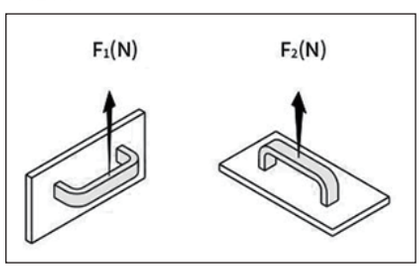

商品型號	A	B	C	D	E	F	G	H	J	K	F1 (N)	F2 (N)
TG-1054-1	107	36	74	21	6.0	6.5	13	10.5	7.0	94	2000	1300
TG-1054-2	136.5	41	94.5	26	7.0	8.5	16	13.5	8.5	117	3000	1700
TG-1054-3	150	44	109	27	7.0		16			132	2500	1800
TG-1054-4	199	49	155	28	7.5		17		9.5	179	3500	3000

*F1和F2是在通常作業條件下，往上提起可能重量的破壞點平均值

1N=0.101972kgf

塑膠把手

TG-741

Plastic Grip Handle



商品介紹:

- 安裝方便簡單
- 材質:尼龍加玻璃纖維
- 用途:機櫃、食品設備、工業用機櫃、工業機械、機床、金屬切割、醫療

Product description:

- Installation is simple and convenient
- Material: Nylon and glass fiber
- Uses: Communication Equipment, Food Equipment, Industrial Enclosures, Industrial Machinery, Machine Tools and Metal Cutting, Medical.

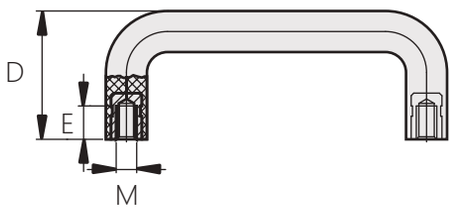

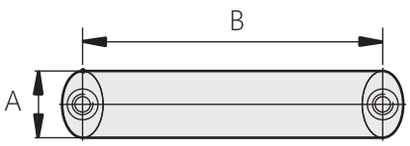

商品型號	A	B	M	D	E
TG-741	26	117	M8	48	13

鋁合金把手

TG-749

Aluminum Grip Handle



商品介紹:

- 安裝方便簡單，提供多種尺寸
- 材質:鋁合金
- 表面處理:陽極銀色、陽極黑色
- 用途:機櫃、食品設備、工業用機櫃、工業機械、機床、金屬切割、醫療

Product description:

- Installation is simple and convenient, providing a variety of sizes
- Material: Aluminum
- Surface treatment: Anodizing Standard Silver ; Anodizing Standard Black.
- Uses: Communication Equipment, Food Equipment, Industrial Enclosures, Industrial Machinery, Machine Tools and Metal Cutting, Medical.

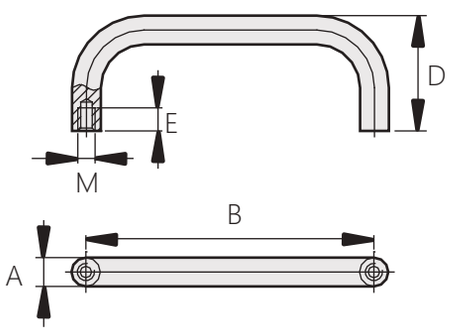

商品型號		A	B	M	D	E
陽極黑色	陽極銀色					
TG-749-1-1	TG-749-2-1	20	200	M8	70	15
TG-749-1-2	TG-749-2-2		250			
TG-749-1-3	TG-749-2-3		300			
TG-749-1-4	TG-749-2-4		400			

鋁合金拉手

Aluminum handle

TG-043



商品介紹:

- 材質:鋁合金
- 表面處理:陽極氧化
- 用途:自動化設備，通訊機櫃，鈑金機箱等

Product description:

- Material: Aluminum alloy
- Surface treatment: Anodizing
- Uses: Automation equipment, communication cabinets, sheet metal chassis, etc.

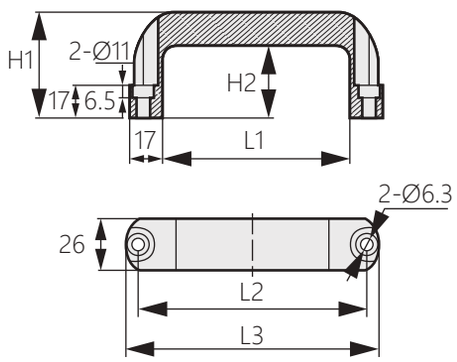

商品型號	H1	H2	L1	L2	L3
TG-043-1	47	30	80	100	114
TG-043-2	54.5	37.5	96	116	130
TG-043-3	55	38	135	132	147.5

弧面拉手

Curved handle

TG-050



商品介紹:

- 弧面設計，外觀美觀大方
- 材質:不鏽鋼（SUS304）
- 表面處理:鏡面拋光
- 用途:自動化設備，戶外機櫃

Product description:

- Curved surface design, beautiful appearance
- Material: Stainless steel (SUS304)
- Surface treatment: Mirror polishing
- Uses: Automation equipment, outdoor cabinet

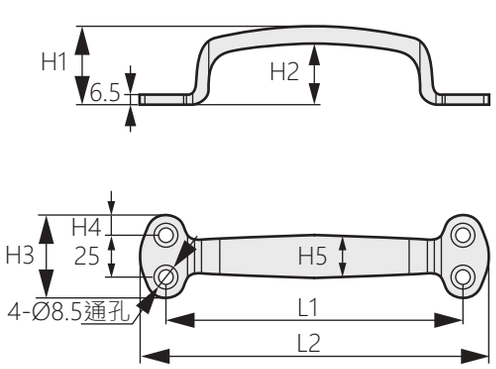

商品型號	L1	L2	H1	H2	H3	H4	H5	D
TG-050-1	120	145.9	35.3	24	42.8	8.9	21.7	6.3
TG-050-2	150	174.6	39	27.7	42.8	8.9	21.7	6.3
TG-050-3	178	209	47	35.8	49.8	12.4	25.4	8.5

把手
Handle

TG-2081



商品介紹:

- 表面處理:鏡面拋光
- 材質:不鏽鋼304 脫蠟鑄造
- 用途:工業工程、機械部品

Product description:

- Surface treatment: Mirror surface buffing
- Material: Stainless steel 304 dewaxing casting
- Uses: Industrial engineering, mechanical parts

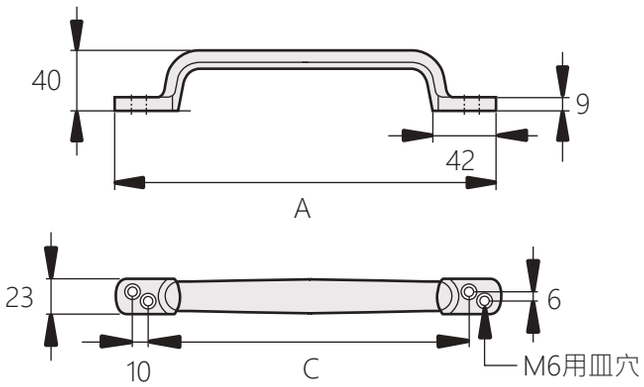

商品型號	A	C
TG-2081-1	252	210
TG-2081-2	234	192
TG-2081-3	200	161

不鏽鋼把手
Stainless Steel Handle

TG-2810



商品介紹:

- 在嚴苛的環境中提供出色的耐久性以及抗腐蝕能力
- 材質:不鏽鋼 304
- 表面處理:鏡面拋光
- 用途:機櫃、食品設備、工業用機櫃、工業機械、機床和金屬切割、醫療、販賣機

Product description:

- Provides superior durability and corrosion-resistance in demanding environments.
- Material: Cast Stainless Steel 304
- Surface treatment: Mirror surface buffing
- Use: Communication Equipment, Food Equipment, Industrial Enclosures, Industrial Machinery, Machine Tools and Metal Cutting, Medical, Vending Machines.

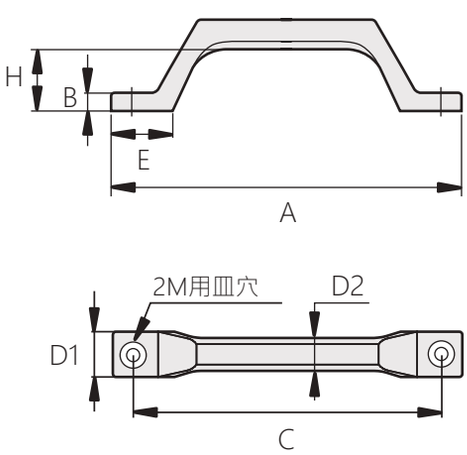

商品型號	E	A	D1	D2	B	H	C	2-M
TG-2810-1	30	220	22	16	9	30	200	M6
TG-2810-2		170					150	
TG-2810-3	20	116	18	12	6	20	100	M4
TG-2810-4		96					80	

不鏽鋼脫臘鑄造把手

TG-2083

Stainless steel dewaxing casting handle



商品介紹:

- 表面處理:鏡面拋光
- 材質:不鏽鋼304 脫蠟鑄造
- 用途:工業工程、機械部品

Product description:

- Surface treatment: Mirror surface buffing
- Material: Stainless steel304 dewaxing casting
- Uses: Industrial engineering, mechanical parts

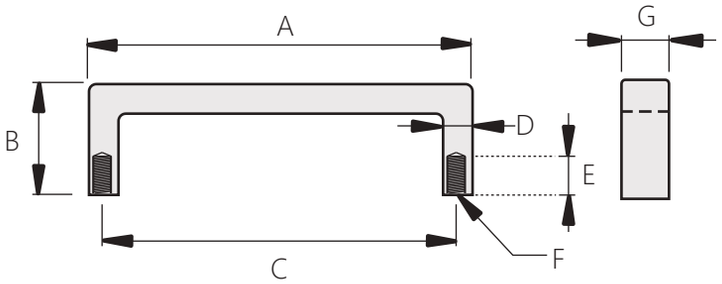

商品型號	A	C	D	B	G	E	M
TG-2083-1	190	180	10	30	12	10	M5螺牙
TG-2083-2	140	130					
TG-2083-3	104	96	8				

90度止動把手

TG-2082

90 degree stop handle



商品介紹:

- 表面處理:鏡面拋光
- 材質:不鏽鋼304 脫蠟鑄造
- 用途:工業工程、機械部品

Product description:

- Surface treatment: Mirror surface buffing
- Material: Stainless steel304 dewaxing casting
- Uses: Industrial engineering, mechanical parts

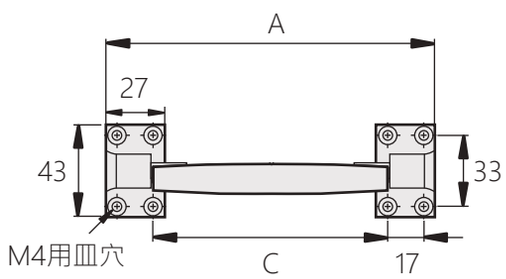

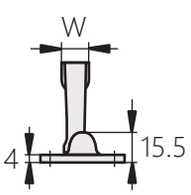

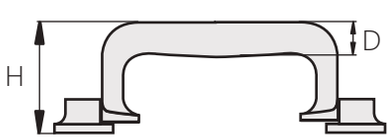

商品型號	A	C	H	D	W
TG-2082-1	176	132	56	18	14
TG-2082-2	153	109	51	16	14
TG-2082-3	144	100	48	14	13

不鏽鋼脫臘鑄造把手

TG-2066

Stainless steel dewaxing casting handle



商品介紹:

- 表面處理:鏡面拋光
- 材質:不鏽鋼304 脫蠟鑄造
- 用途:工業工程、機械部品

Product desciption:

- Surface treatment: Mirror surface buffing
- Material: Stainless steel304 dewaxing casting
- Uses: Industrial engineering, mechanical parts

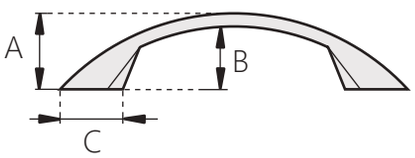

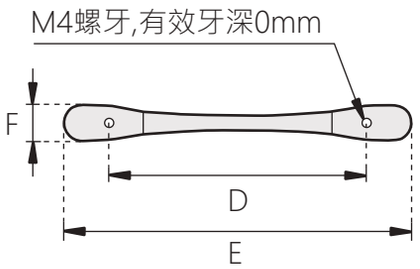

商品型號	A	B	C	D	E	F
TG-2066-1	35	30	24	128.5	163	13.7
TG-2066-2	29	24	24	98.5	133	13.7

不鏽鋼脫臘鑄造把手

TG-2068

Stainless steel dewaxing casting handle



商品介紹:

- 表面處理:鏡面拋光
- 材質:不鏽鋼304 脫蠟鑄造
- 用途:工業工程、機械部品

Product description:

- Surface treatment: Mirror surface buffing
- Material: Stainless steel304 dewaxing casting
- Uses: Industrial engineering, mechanical parts

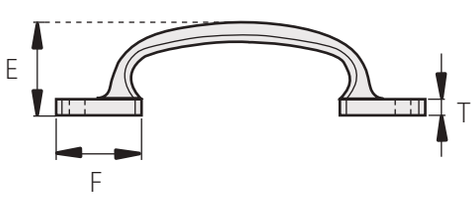

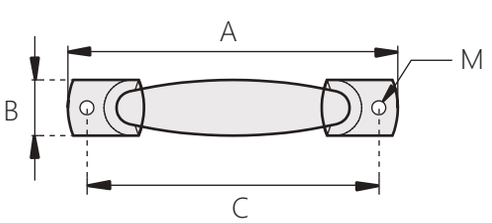

商品型號	A	B	T	C	M	E	F
TG-2068-1	145	25	6	125	2-Ø6.5	34	35
TG-2068-2	130	22	6	115	2-Ø5.5	33	30
TG-2068-3	120	20	5	105	2-Ø5.5	30	29

合頁把手

Hinge handle

TG-632

CAD



TG-632-1
TG-632-2
TG-632-3



TG-632-4



TG-632-5

商品介紹:

- TG-632-1、TG-632-2、TG-632-3:
  表面處理:鉻、黑色、藍鋅
  材質:鐵+塑料
- TG-632-4、TG-632-5:
  表面處理:黑色、亮鉻
  材質:鐵+塑料

Product description:

- TG-632-1、TG-632-2、TG-632-3:
  Surface treatment: Chrome, black, blue zinc
  Material: Iron + plastic
- TG-632-4、TG-632-5:
  Surface treatment: Black, bright chrome
  Material: Iron + plastic

[TG-632-1 TG-632-2 TG-632-3]

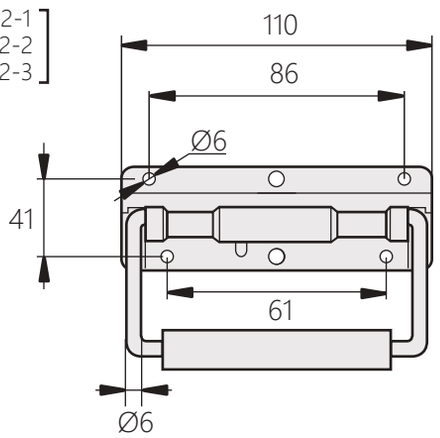

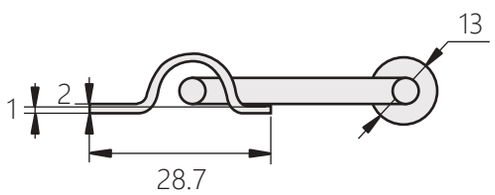

商品型號	材質	表面處理
TG-632-1	鐵+塑料	鉻
TG-632-2		黑色
TG-632-3		藍鋅

[TG-632-4 TG-632-5]

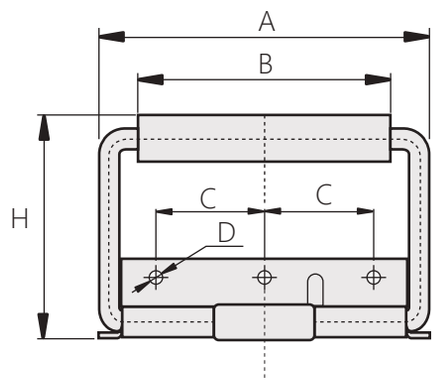

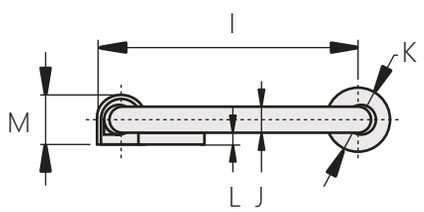

商品型號	材質	表面處理
TG-632-4	鐵+塑料	黑色
TG-632-5		亮鉻

商品型號	A	B	C	D	I	J	K	L	M
TG-632-4	134	100	43	3-Ø5.2	72.9	8	Ø19	2	19.8
TG-632-5									

合頁把手

TG-630

Hinge handle



商品介紹:

- 表面處理:鉻、黑色、藍鋅
- 材質:鐵、塑料

Product description:

- Surface treatment: Chrome, black, blue zinc
- Material: Iron, plastic

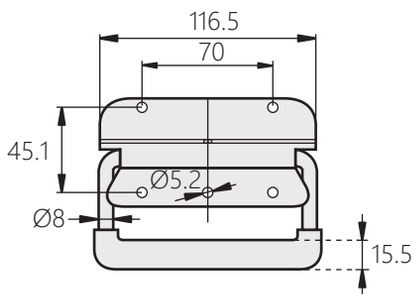

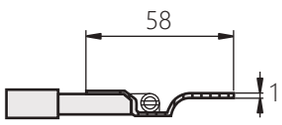

商品型號	材質	表面處理
TG-630-1	鐵+塑料	鉻
TG-630-2		黑色
TG-630-3		藍鋅

合頁把手

TG-631

Hinge handle

商品介紹:

- 表面處理:鉻、黑色、藍鋅
- 材質:鐵、塑料、鋅合金

Product description:

- Surface treatment: Chrome, black, blue zinc
- Material: Iron, plastic, zinc



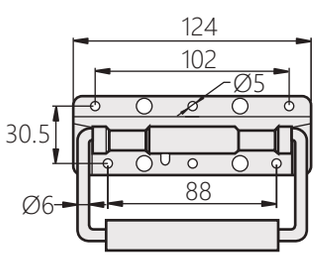

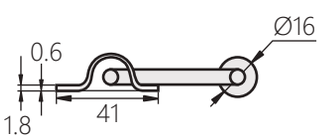

商品型號	材質	表面處理
TG-631-1	鐵+塑料+鋅合金	鉻
TG-631-2		黑色
TG-631-3		藍鋅

合頁把手

TG-620

Hinge handle

商品介紹:

- 表面處理:鉻、黑色、藍鋅
- 材質:鐵、塑料

Product description:

- Surface treatment: Chrome, black, blue zinc
- Material: Iron, plastic



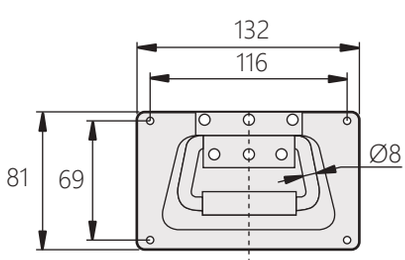

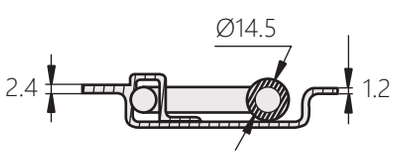

商品型號	材質	表面處理
TG-620-1	鐵、塑料	鉻
TG-620-2		黑色
TG-620-3		藍鋅

彈力折疊拉手

Elastic folding handle

TG-622-1



商品介紹:

- 內置緩衝柱，折疊手柄時無噪音
- 轉軸處安裝拐點緩沖片，開閉時手感回饋性好
- 材質:鋅合金（ZDC）
- 表面處理:鍍亮鉻
- 用途:控制設備、小型集裝箱、測量設備等

Product description:

- Built-in buffer column, no noise when folding handle
- The turning point buffer is installed at the shaft, which feels good when opening and closing
- Material: Zinc alloy (ZDC)
- Surface treatment: Bright chrome plating
- Uses: Control equipment, small containers, measuring equipment, etc.

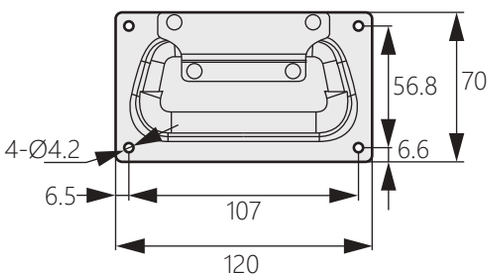

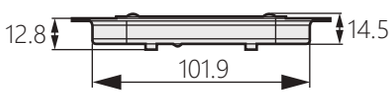

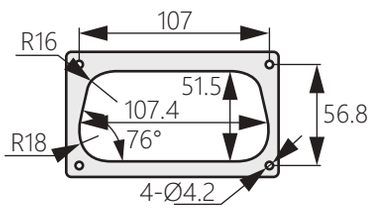

開孔尺寸

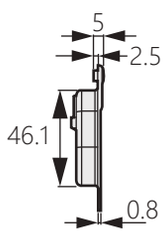

滑動式拉手

Sliding handle

TG-627



商品介紹:

- 單孔卡入式安裝，無需外加緊固件
- 單指操作即可開啟
- 材質:ABS
- 表面處理:黑色
- 用途:小型機櫃、服務器、可拆卸門板等

Product description:

- Single-hole snap-in installation without additional fasteners
- Open with one finger operation
- Material: ABS
- Surface treatment: Black
- Uses: Small cabinets, servers, detachable door panels, etc.

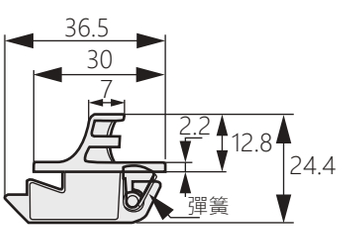

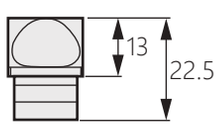



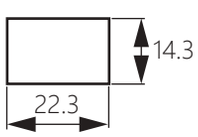

操作示意圖

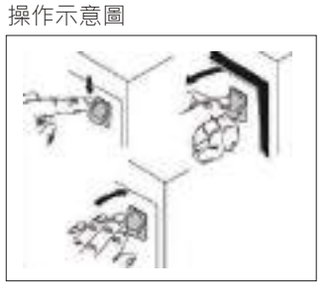

安裝示意圖



合頁把手
Hinge handle

TG-609



商品介紹:
- 表面處理:鎳、震動拋光
- 材質:鐵、不鏽鋼

Product description:
- Surface treatment: Nickel,vibration poloshing
- Material: Iron, Stainless steel

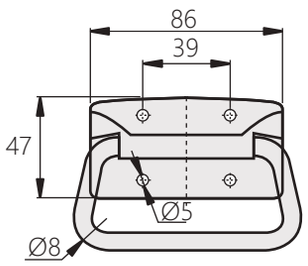

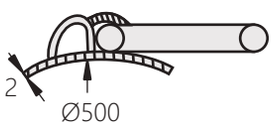

商品型號	材質	表面處理
TG-609-1	鐵	鎳
TG-609-2	不鏽鋼201	震動拋光
TG-609-3	不鏽鋼304	震動拋光

不鏽鋼扣手
Stainless steel buckle

TG-3401



商品介紹:
- 最大靜荷載:30KG
- 材質:不鏽鋼304
- 表面處理:鏡光,拉絲
- 用途:廚具、箱櫃、車輛、船舶、酒店設備、機械等

Product description:
- Maximum static load: 30KG
- Material: Stainless steel 304
- Surface treatment: Mirror polishing,Drawbench
- Uses: For kitchen utensils, cabinets, vehicles, ships, hotel equipment, machinery, etc.

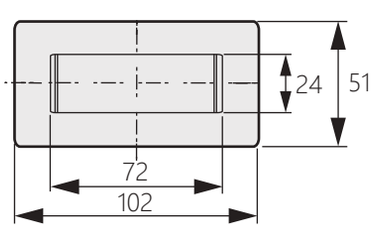

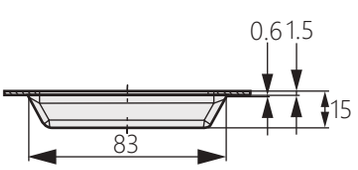

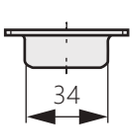

控制設備拉手
Control device handle

TG-9001



商品介紹:
- 內置彈簧結構，方便開啟
- 材質:不鏽鋼316
- 表面處理:鏡光拋光
- 用途:控制設備、小型集裝箱、測量設備等

Product description:
- Built-in spring structure for easy opening
- Material: Stainless steel (SUS316)
- Surface treatment: Mirror polishing
- Uses: Control equipment, small containers, measuring equipment, etc.

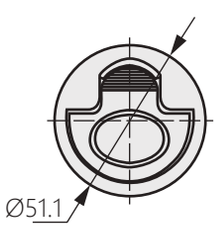

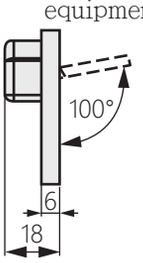

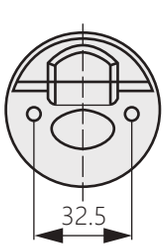

合頁把手

Hinge handle

TG-602



商品介紹:
- 表面處理:鎳、震動拋光
- 材質:鐵、不鏽鋼

Product description:
- Surface treatment: Nickel,vibration poloshing
- Material: Iron, Stainless steel

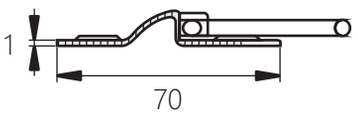

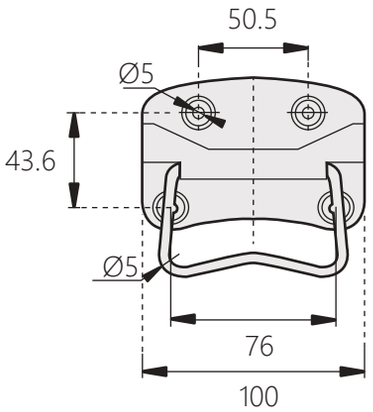

商品型號	材質	表面處理
TG-602-1	鐵	鎳
TG-602-2	不鏽鋼201	震動拋光
TG-602-3	不鏽鋼304	震動拋光

合頁把手

Hinge handle

TG-608



商品介紹:
- 表面處理:鎳、震動拋光
- 材質:鐵、不鏽鋼

Product description:
- Surface treatment: Nickel, vibration poloshing
- Material: Iron, Stainless steel

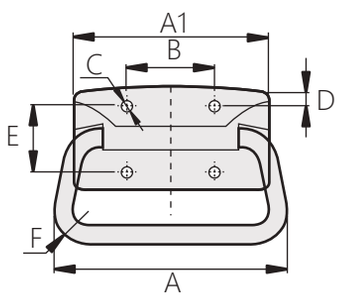

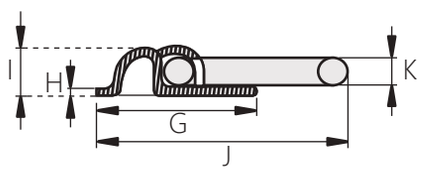

商品型號	材質	表面處理
TG-608-1	鐵	鎳
TG-608-2	不鏽鋼201	震動拋光
TG-608-3	不鏽鋼304	震動拋光
TG-608-4	不鏽鋼304	震動研磨

商品型號	A	A1	B	C	D	E	F	G	H	I	J	K
TG-608-1		86	39	Ø5		28.9	Ø8	45	2			
TG-608-2												
TG-608-3												
TG-608-4	101	86	39	4-Ø5	8	30		46	2	14	73	Ø8

合頁把手

Hinge handle

TG-601



商品介紹:

- 表面處理:鎳、震動拋光、鍍鋅、震動研磨、鏡面拋光、鍍亮鉻
- 材質:鐵、不鏽鋼

Product description:

- Surface treatment: Nickel, vibration polishing, galvanizing,vibration grinding,Mirror polishing, bright chrome plating.
- Material: Iron, Stainless steel

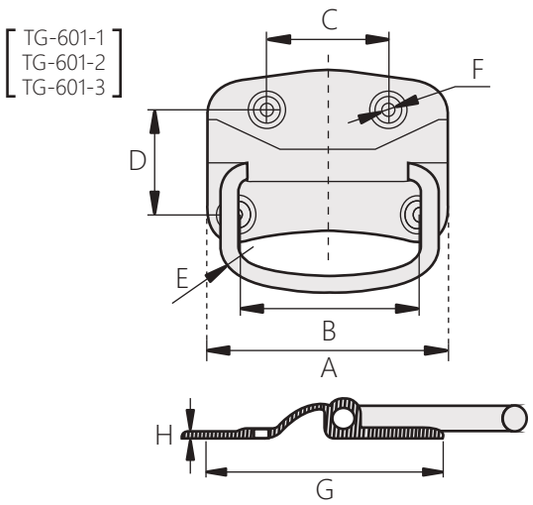

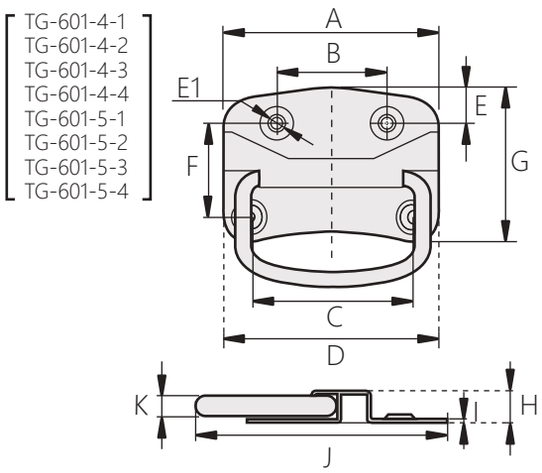

商品型號	材質	表面處理
TG-601-1	鐵	鎳
TG-601-2	不鏽鋼201	震動拋光
TG-601-3	不鏽鋼304	震動拋光

商品型號	材質	表面處理
TG-601-4-1	鐵	鍍鋅
TG-601-4-2	不鏽鋼304	震動研磨
TG-601-4-3	鐵	鍍鋅
TG-601-4-4	不鏽鋼304	震動研磨
TG-601-5-1	不鏽鋼304	鏡面拋光
TG-601-5-2	不鏽鋼304	鏡面拋光
TG-601-5-3	鐵	鍍亮鉻
TG-601-5-4	不鏽鋼304	鏡面拋光

商品型號	A	B	C	D	E	F	G	H
TG-601-1	100	76	50.5	43.7	Ø7	4-Ø5	71.2	1
TG-601-2								
TG-601-3								

商品型號	A	B	C	D	E	E1	F	G	H	I	J	K
TG-601-4-1	80	38.5	60	77	12	4-Ø5	40		10.2	1	79	Ø6
TG-601-4-2	80	38.5	60	77	12		40		10.2	1	79	Ø6
TG-601-4-3	103.5	50	77	96	16		47.5		13	1	95	Ø8
TG-601-4-4	103.5	50	77	96	16		47.5		13	1	95	Ø8
TG-601-5-1	80	38	60	76	12		40	63	10	1.1	80	Ø6
TG-601-5-2	101	50	77	95	18	4-Ø5.8	49	78	14	1.5	97	Ø8
TG-601-5-3	100	51	76	88	16	4-Ø5	42	73	10	1	93	Ø7
TG-601-5-4	100	51	76	88	16	4-Ø5	42	73	10	1	93	Ø7

帶彈簧行李箱把手

Luggage handle with spring

TG-611



商品介紹:

- 使用載重:294N
- 材質:冷軋不鏽鋼板、冷軋鋼板
- 表面處理:電解研磨、鍍鋅處理
- 用途:測量儀器、小型貨櫃

Product description:

- Working load: 249N
- Material: Coid rolled stainless steel plate(SUS304)
- Surface treatment: Electrolytic polishing、Zinc plating chromate treatment.
- Uses:Measuring equipment and small-sized containers.

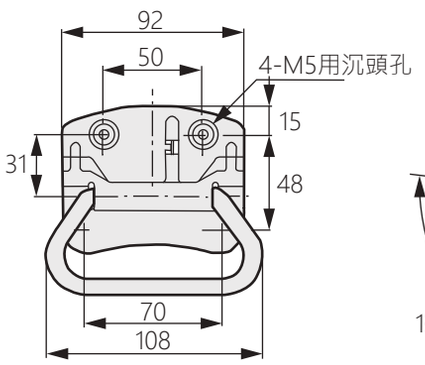

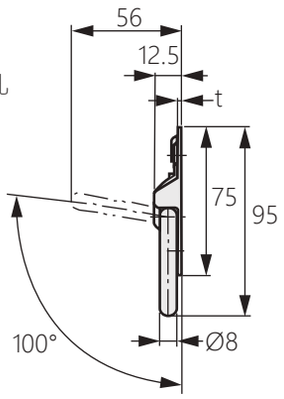

商品型號	材質	t
TG-611-1	不鏽鋼	1.5
TG-611-2	鐵	1.6

嵌入式折疊拉手

Embedded folding handle

TG-623



商品介紹:

- 內置緩衝柱，折疊手柄時無噪音
- 轉軸處安裝拐點緩沖片，開閉時手感回饋性好
- 材質:鋅合金
- 表面處理:鍍沙鉻
- 用途:控制設備、小型集裝箱、測量設備等

Product description:

- Built-in buffer column, no noise when folding handle
- The turning point buffer is installed at the shaft, which feels good when opening and closing.
- Material: Zinc alloy
  Surface treatment: Chrome-plated sand
- Uses: Control equipment, small containers, measuring equipment, etc.

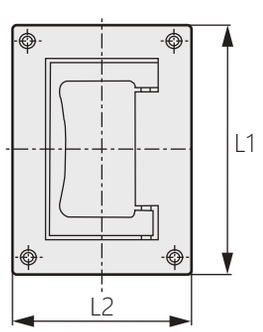

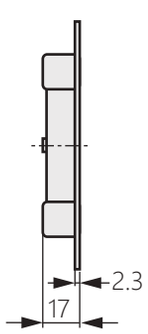

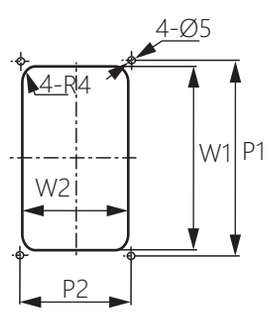

商品型號	L1	L2	P1	P2	W1	W2
TG-623-1	111	69.5	100	58	93.5	52
TG-623-2	95	60	83.5	48	79	48

弓形弧面拉手

Arched Handle

TG-052



商品介紹:

- 內部安裝螺絲，表面無安裝痕跡
- 弧面設計，外觀美觀大方
- 材質:不鏽鋼（SUS304）
- 表面處理:鏡面拋光
- 用途:機箱機櫃，電櫃，小型機箱櫃等

Product description:

- Internal mounting screws, no mounting marks on the surface
- Curved surface design, beautiful appearance
- Stainless steel for better stability
- Material: Stainless steel (SUS304)
- Surface treatment: Mirror polishing
- Uses: Chassis cabinets, electric cabinets, small cabinets, etc.

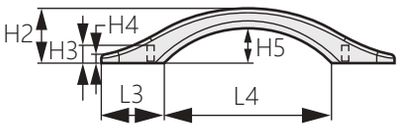

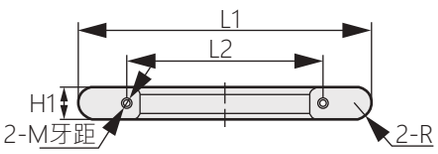

商品型號	L1	L2	L3	L4	H1	H2	H3	H4	H5	R	M
TG-052-1	175.2	120	36.1	105.2	20	32.7	12	6	21.2	9	2-M5*0.8
TG-052-2	223	149	47	129	24.7	41	13	6.4	26.3	12.4	2-M6*1.0

折疊鐵拉手

Folding iron handle

TG-2312



商品介紹:

- 配彈簧裝置，手柄可自動回彈
- 材質:不鏽鋼
- 表面處理:震動研磨
- 用途:機箱機櫃、小型集裝箱

Product description:

- With spring device, the handle can spring back automatically
- Material: Stainless steel
- Surface treatment: Vibration grinding
- Uses: Cabinets, small containers

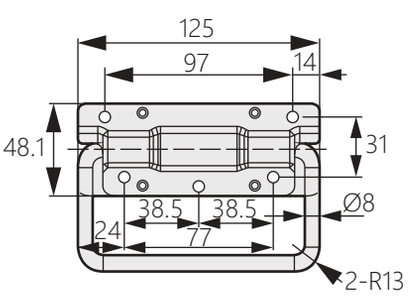

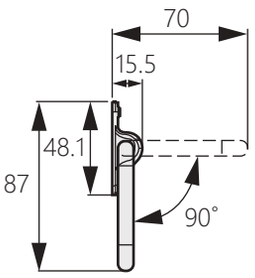

提拉把手

Carrying Handle

TG-326



商品介紹:

- 簡單的面板預製和螺釘安裝
- 材質:固定座 - 不鏽鋼、拉手柄 -PVC、補強板 -SK7
- 表面處理:固定座 - 震動研磨、黑色塗裝
- 用途:機櫃、配分電盤、機械設備

Product description:

- Simple panel prep and screw mount installation
- Material: Seat-Stainless Steel 304 ; Handle-PVC wrapped around SK7 Steel sheet
- Surface treatment: Seat- Vibration Grind ; Black Powder Coated
- Uses: Communication Equipment, Control Panel, Cabinet Door, Machinery Equipment.

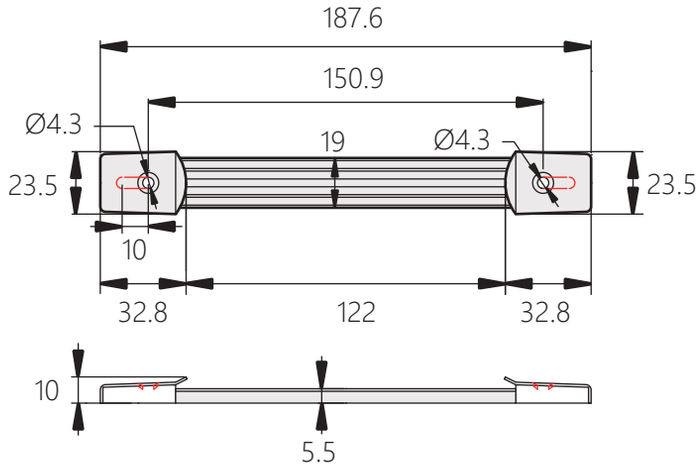

商品型號	顏色
TG-326-1	黑色塗裝
TG-326-2	不鏽鋼原色

鋁手輪

Aluminum handwheel

TG-160



商品介紹:

- 材質:手輪-鋁合金,把手-電木,摺疊結構-鐵
- 表面處理:手輪-外緣拋光,把手-黑色,摺疊結構-染黑

Product description:

- Material: Hand wheel-aluminum alloy, handle-bakelite, folding structure-iron.
- Surface treatment: Hand wheel-polished outer edge, handle-black, folding structure-black.

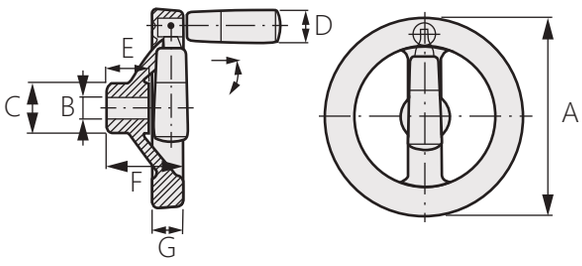

商品型號	A	B	C	D	E	F	G
TG-160-1	125	B12	31	23	26	51	26
TG-160-2	140	B14	36	23	19	45.5	24.5
TG-160-3	160	B14	36	26	20	47	25
TG-160-4	200	B18	42	26	24	52.5	25
TG-160-5	250	B22	48	26	28	61	26.5

握柄把手

TG-6320

Grab Handle



商品介紹:

- 透過螺桿固定雙把手，門板需沖孔
- 搭配美觀座，外型美觀細緻
- 材質:手把-不鏽鋼304、固定座：青銅
- 備註: 螺桿- S45C、荷重-100KG

Product description:

- Installed with a normal hole, tighten the handle by bolt
- With mounting washer, excellent aesthetic appearance
- Material: Handle-Stainless steel 304, Holder:Bronze
- Note: Screw-S45C、Load capacity-100KG

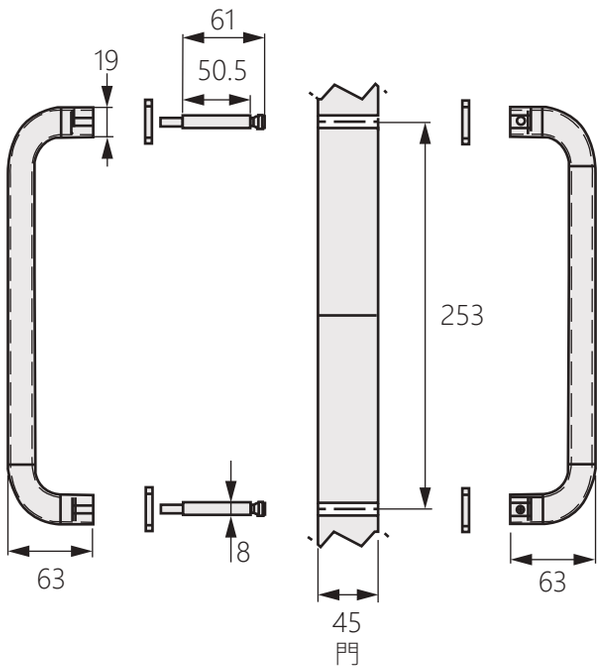

焊接不鏽鋼把手

0311-160-S

Welding stainless steel handle



商品介紹:

- 可實現單點式安裝，表面質感良好
- 材質:不鏽鋼
- 用途:機箱機櫃、辦公設備、測量設備

Product description:

- Simple and practical structure design, single section, double and three sections
- Material: Stainless steel
- Uses: Chassis cabinet, electric cabinet, small cabinet.

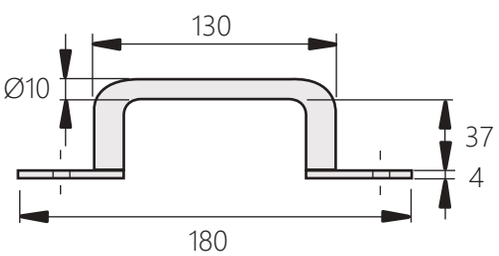

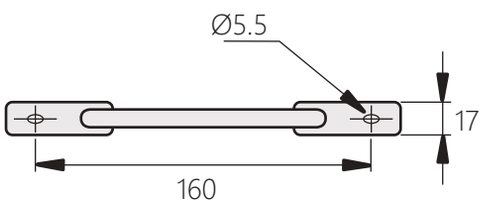

外牙把手

External tooth handle

TG-507



商品介紹:

- 外牙把手、帶底座把手
- 表面處理:
  TG-507-1:不鏽鋼(4 =鏡光)
  TG-507-2:鐵(1=鉻)
- 材質:不鏽鋼、鐵
- 備註:如需底座請於型號加上〝Z〞,例如: TG-507-1-1-Z
  TG-507-1-8, TG-507-2-4無底座

Product description:

- External tooth handle, with base handle
- Surface treatment:
  TG-507-1: Stainless steel (4=mirror)
  TG-507-2: Iron (1 = chromium)
- Material: Stainless steel, Iron
- Note: TG-507-1-8, TG-507-2-4,
  Other than these two items, if you need the base, please add "Z" to the model .

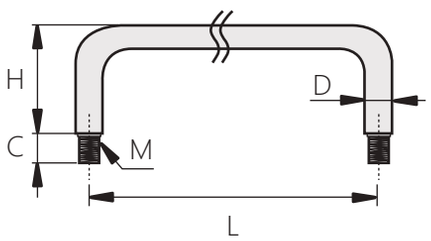

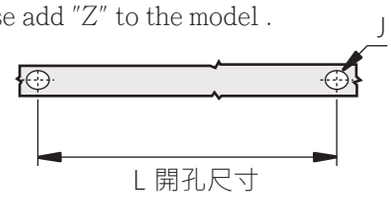

15.0*3.5底座

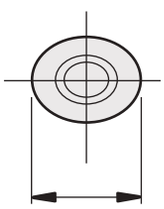

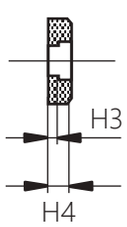

商品編號		L	D	H	M	C	J	H3	H4	D2
不鏽鋼	鐵									
TG-507-1-1		20	Ø4	22	M2.6	7		1	2	6
TG-507-1-2		40	Ø6		M6			1.5	2.5	10
TG-507-1-3		60								
TG-507-1-4		68	Ø7	31	M5	11		1	3	
TG-507-1-5	TG-507-2-1	68	Ø8	40	M6	15	Ø7	1.5	3.5	15
TG-507-1-6	TG-507-2-2	75								
TG-507-1-7	TG-507-2-3	90								
TG-507-1-8	TG-507-2-4	100		38						
TG-507-1-9	TG-507-2-5						Ø7	1.5	3.5	15
TG-507-1-10	TG-507-2-6	120		40						
TG-507-1-11	TG-507-2-7	150								
TG-507-1-12		100	Ø9	30	M5	11		1	3	13
TG-507-1-13	TG-507-2-8	80	Ø10	37			Ø6	1.5	3.5	15
TG-507-1-14	TG-507-2-9	100								
TG-507-1-15	TG-507-2-10	110								
TG-507-1-16				40	M6					
TG-507-1-17	TG-507-2-11	120		37	M5		Ø6			
TG-507-1-18				40	M6					
TG-507-1-19	TG-507-2-12	125		37	M5		Ø6			
TG-507-1-20	TG-507-2-13	160								
TG-507-1-21	TG-507-2-14	200								
TG-507-1-22	TG-507-2-15	250								
TG-507-1-23		150	Ø12	50	M8	20			4.5	18
TG-507-1-24		188								
TG-507-1-25		238								
TG-507-1-26		288								
TG-507-1-27		130	Ø18	49	M12	25			3	25

*如需底座請於型號加上〝Z〞,例如:TG-507-1-1-Z

包膠圓形把手

Plastic round handle

TG-513



商品介紹:

- 此產品有圓形及帶底座圓形把手
- 材質:不鏽鋼、鐵
- 表面處理:
  TG-513-1:不鏽鋼(4 =鏡光)
  TG-513-2:鐵(1=鉻)
- 備註:TG-513-1-8、TG-513-2-8、
  TG-513-1-10、TG-513-2-10、
  TG-513-1-12、TG-513-2-12
  除了以上這六款尺寸外，如需底座請於型號加上〝Z〞

Product description:

- This product has a round and round handle with a base
- Material: Stainless steel, Iron
- Surface treatment:
  TG-513-1: Stainless steel (4=mirror)
  TG-513-2: Iron (1=chromium)
- Note:TG-513-1-8、TG-513-2-8、
  TG-513-1-10、TG-513-2-10、
  TG-513-1-12、TG-513-2-12
  Other than these six items, If you need the base, please add " Z " to the model.

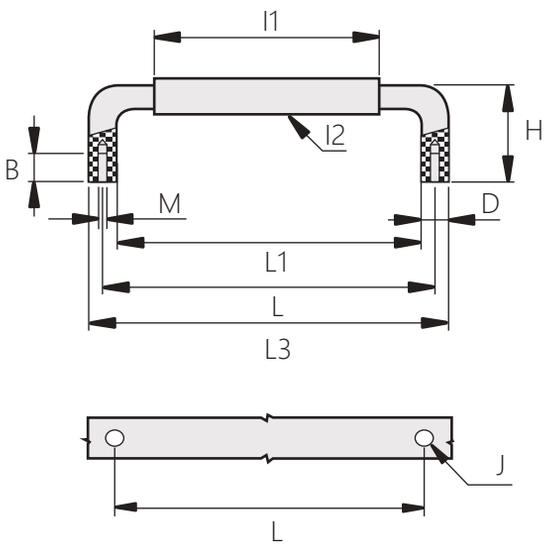

底座選配使用

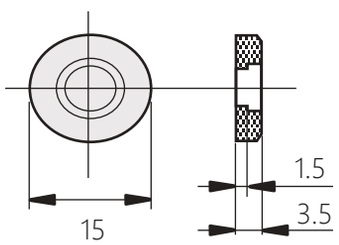

商品編號		L	L1	L3	D	H	M	B	J	I2	I1
不鏽鋼	鐵										
TG-513-1-1	TG-513-2-1	100			Ø9	32	M5	10	2-Ø6	Ø12.7	77
TG-513-1-2	TG-513-2-2	120			Ø8.8	40				Ø18	90
TG-513-1-3	TG-513-2-3	75			Ø8					Ø9.3	45
TG-513-1-4	TG-513-2-4	90				32					60
TG-513-1-5	TG-513-2-5	100									70
TG-513-1-6	TG-513-2-6				Ø9					Ø10.4	60
TG-513-1-7	TG-513-2-7	119				40					89
TG-513-1-8	TG-513-2-8	80	70	90	Ø10	37.8	M6*1	13		Ø11.2	90
TG-513-1-9	TG-513-2-9	100				37	M5	10	2-Ø6	Ø11.5	70
TG-513-1-10	TG-513-2-10		90	110		37.8	M6*1	13		Ø11.2	90
TG-513-1-11	TG-513-2-11	120				37	M5	10	2-Ø6	Ø11.5	
TG-513-1-12	TG-513-2-12		110	130		37.8	M6*1	13		Ø11.2	
TG-513-1-13	TG-513-2-13	150			Ø12	52	M8	10	2-Ø9	Ø13.5	119

*如需底座請於型號加上〝Z〞,例如:TG-513-1-1-Z

雙彎內裝把手

Double curved handle

TG-532



商品介紹:

- 安裝方便，簡潔大方
- 材質:不鏽鋼、鐵
- 表面處理:
  TG-532-1:不鏽鋼(4=鏡光)
  TG-532-2:鐵(1=鉻)
- 備註:如需底座請於型號加上〝Z〞
  例如:TG-532-1-1-Z

Product description:

- Easy to install, simple and generous
- Material: Stainless steel, Iron
- Surface treatment:
  TG-532-1: Stainless steel (4= mirror light)
  TG-532-2: Iron (1= chromium)
- Note: If you need the base, please add '' Z '' to the model
  EX: TG-532-1-1-Z.

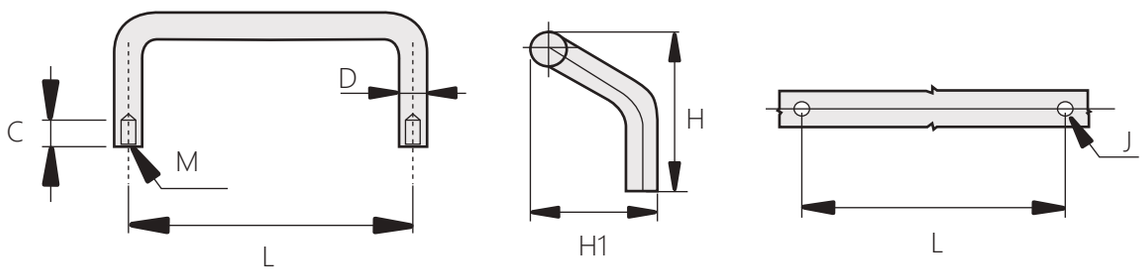

底座選配使用

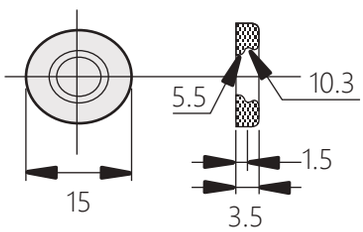

商品型號		L	D	H	M	C	H1	J
不鏽鋼	鐵							
TG-532-1-1	TG-532-2-1	60	Ø6	30	M4	7	16	2-Ø5
TG-532-1-2	TG-532-2-2	80		31.5				
TG-532-1-3	TG-532-2-3	100	Ø8	32	M5	10	18	2-Ø6
TG-532-1-4	TG-532-2-4	120		40				
TG-532-1-5	TG-532-2-5	48	Ø10	47		13	40	
TG-532-1-6	TG-532-2-6	66						
TG-532-1-7	TG-532-2-7	88						
TG-532-1-8	TG-532-2-8	100						
TG-532-1-9	TG-532-2-9	110						
TG-532-1-10	TG-532-2-10	120						
TG-532-1-11	TG-532-2-11	125						
TG-532-1-12	TG-532-2-12	160						

*如需底座請於型號加上〝Z〞,例如:TG-532-1-1-Z

多彎把手

TG-547

Multi-bend handle



商品介紹:

- 表面處理:
  TG-547-1:不鏽鋼(4=鏡光)
  TG-547-2:鐵(1=鉻)
- 材質: 不鏽鋼、鐵

Product description:

- Surface treatment:
  TG-547-1: Stainless steel (4=mirror)
  TG-547-2: Iron (1 = chromium)
- Material: Stainless steel, Iron

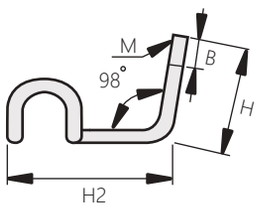

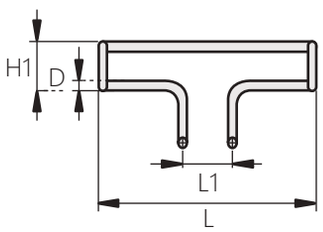

商品型號	L	D	H	M	B	H1	H2	L1
TG-547-1	364	Ø10	85	M10	24	50	109	160
TG-547-2								

焊接雙彎把手

TG-534

Welding double curved handle



商品介紹:

- 焊接設計
- 雙彎把更顯具特色
- 表面處理:
  TG-534-1:不鏽鋼(4=鏡光)
  TG-534-2:鐵(1=鉻)
- 材質:不鏽鋼、鐵
- 備註: 所有尺寸皆可製作黑色

Product description:

- Welding design
- Double bends are more distinctive
- Surface treatment:
  TG-534-1: Stainless steel (4=mirror)
  TG-534-2: Iron (1=chromium)
- Material: Stainless steel, Iron
- Note: All sizes can be made black

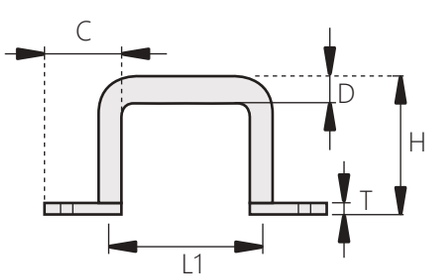

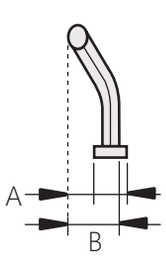

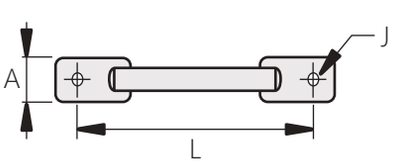

商品型號		L	L1	D	H	B	C	A	T	J
不鏽鋼	鐵									
TG-534-1-1	TG-534-2-1	110	70	Ø10	51	40	35	17	4	Ø5.5*2
TG-534-1-2	TG-534-2-2	120	80							
TG-534-1-3	TG-534-2-3	125	85							
TG-534-1-4	TG-534-2-4	160	120							
TG-534-1-5	TG-534-2-5	200	160							
TG-534-1-6	TG-534-2-6	250	210							

雙折疊把手

Double folding handle

TG-575



商品介紹:

- 表面處理:
  TG-575-1:不鏽鋼(4=鏡光)
  TG-575-2:鐵(1=鉻)
- 材質:不鏽鋼、鐵

Product description:

- Surface treatment:
  TG-575-1: Stainless steel (4 = mirror light)
  TG-575-2: Iron (1 = chromium)
- Material: Stainless steel, Iron

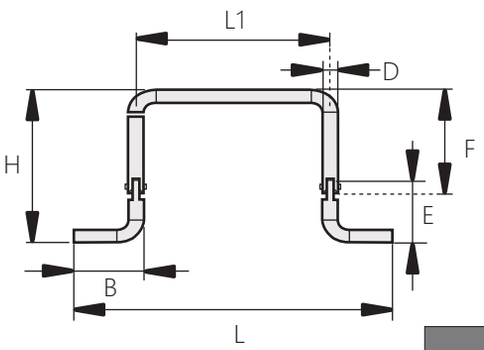

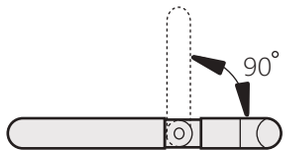

商品型號		L	L1	D	E	F	H	B
不鏽鋼	鐵							
TG-575-1-1	TG-575-2-1	146	90	Ø8	40	71	103	32
TG-575-1-2	TG-575-2-2	156	100					
TG-575-1-3	TG-575-2-3	176	120					

包膠折疊把手

Plastic folding handle

TG-566



商品介紹:

- 表面處理:
  TG-566-1:不鏽鋼(4=鏡光)
  TG-566-2:鐵(1=鉻)
- 材質:不鏽鋼、鐵

Product description:

- Surface treatment:
  TG-566-1:Stainless steel (4=mirror)
  TG-566-2:Iron (1 = chromium)
- Material: Stainless steel, Iron

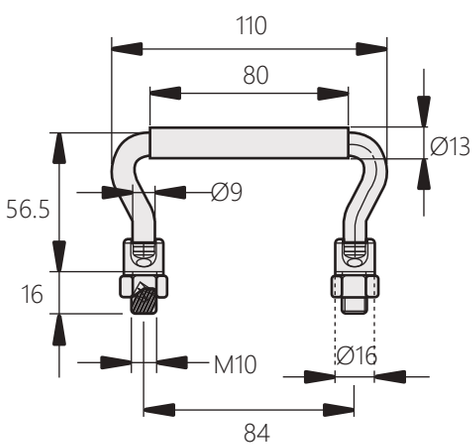

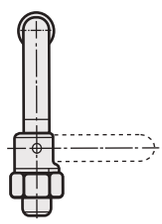

折疊把手

Folding handle

TG-539



商品介紹:

- 安裝方便，簡潔大方
- 表面處理:
  TG-539-1:不鏽鋼(4=鏡光)
  TG-539-2:鐵(1=鉻)
- 材質: 不鏽鋼、鐵

Product description:

- Easy to install, simple and generous
- Surface treatment:
  TG-539-1: Stainless steel (4=mirror)
  TG-539-2: Iron (1 = chromium)
- Material: Stainless steel, iron

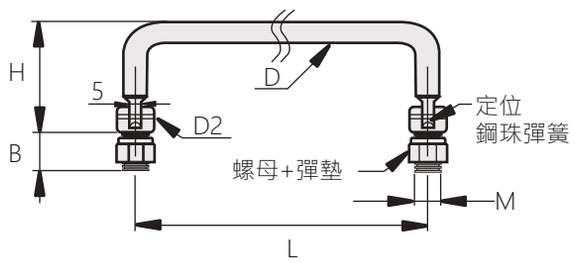

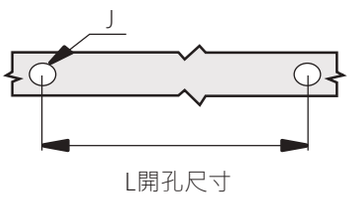

商品型號		L	H	M	B	D	D2	J
不鏽鋼	鐵							
TG-539-1-1	TG-539-2-1	90	41.5	M10	16	Ø9	Ø16	2-Ø11
TG-539-1-2	TG-539-2-2	100						
TG-539-1-3	TG-539-2-3	120						
TG-539-1-4		152.4	47	3/8-24		Ø9.5		

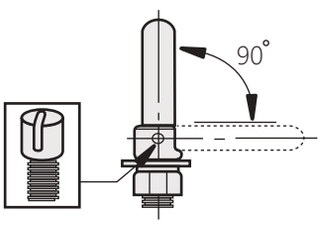

毛巾架把手

Towel rack handle

TG-538



商品介紹:

- 美觀質感佳 適合安裝於浴室，可吊掛毛巾
- 表面處理:1=鉻
- 材質:鐵

Product description:

- Beautiful and good quality. Suitable for installation in the bathroom. Hanging towel
- Surface treatment: 1 = chrome
- Material: Iron

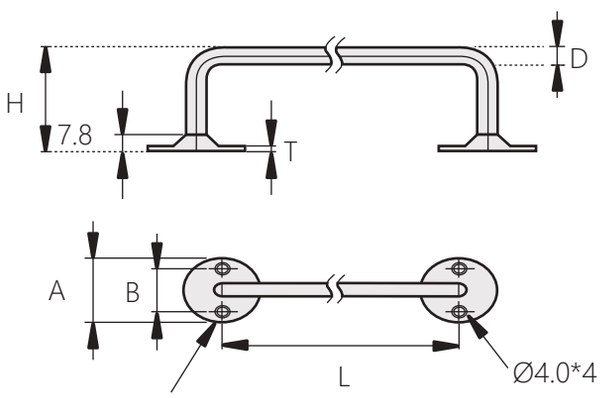

商品型號	L	D	H	A	B	T
TG-538-1	180	Ø8	50	Ø38	26	2.9
TG-538-2	230					
TG-538-3	305					
TG-538-4	406					
TG-538-5	530					
TG-538-6	680					

折疊把手

Folding handle

TG-546



商品介紹:

- 表面處理:
  TG-546-1、TG-546-3:不鏽鋼(4=鏡光)
  TG-546-2、TG-546-4:鐵(1=鉻)
- 材質:不鏽鋼、鐵

Product description:

- Surface treatment:
  TG-546-1, TG-546-3: Stainless steel(4 = mirror light)
  TG-546-2, TG-546-4: Iron (1=chromium)
- Material: Stainless steel, Iron

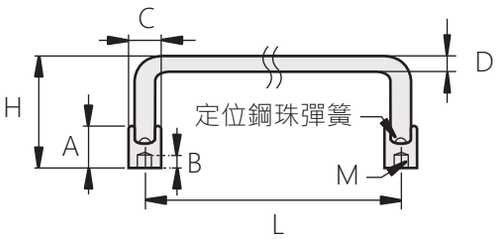

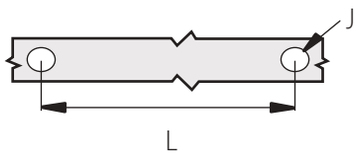

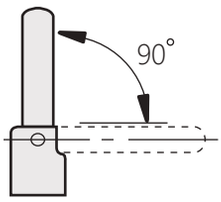

商品型號		規格	L	D	H	M	B	C	A	J
不鏽鋼	鐵									
TG-546-1-1	TG-546-2-1	有彈簧鋼珠限位	90	Ø8.5	60	M6	6	Ø16	25	2-Ø7
TG-546-1-2	TG-546-2-2		100							
TG-546-1-3	TG-546-2-3		120							
TG-546-3-1	TG-546-4-1	無彈簧鋼珠限位	90				9		18	
TG-546-3-2	TG-546-4-2		100							
TG-546-3-3	TG-546-4-3		120							

彎曲把手

Charging pile handle

TG-542



商品介紹:

- 表面處理:
  TG-542-1:不鏽鋼(4=鏡光)
  TG-542-2:鐵(1=鉻)
- 材質:不鏽鋼、鐵

Product description:

- Surface treatment:
  TG-542-1: Stainless steel (4 = mirror light)
  TG-542-2: Iron (1=chromium)
- Material: Stainless steel, Iron

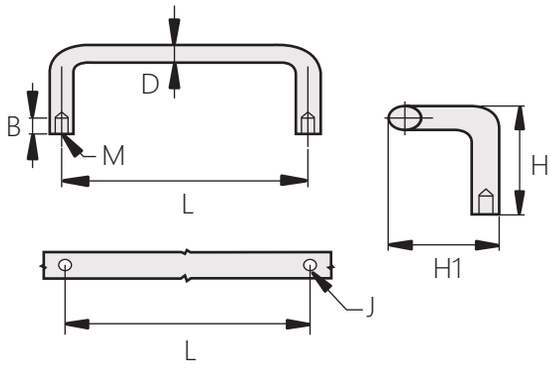

商品型號		L	D	M	H	B	H1	J
不鏽鋼	鐵							
TG-542-1-1	TG-542-2-1	180	Ø20	M6	110	12	125	2-Ø7
TG-542-1-2	TG-542-2-2	180		M8	110	15		2-Ø9
TG-542-1-3	TG-542-2-3	300		M8	98	15		

四方把手
Square handle

TG-540



商品介紹:
- 表面處理:
  TG-540-1:不鏽鋼(4=鏡光、6=拉絲)
  TG-540-2:鐵(1=鉻)
- 材質:不鏽鋼、鐵

Product description:
- Surface treatment:
  TG-540-1: Stainless steel (4 = mirror light, 6 = wire drawing)
  TG-540-2: Iron (1=chromium)
- Material: Stainless steel, Iron

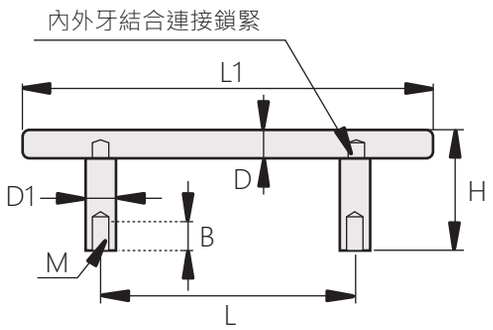

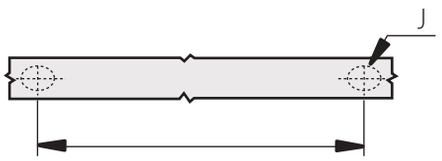

L開孔尺寸

商品型號		L	L1	H	M	B	D	D1	J
不鏽鋼	鐵								
TG-540-1-1	TG-540-2-1	80	134	31	M4	8	Ø9.5	Ø7.5	Ø5
TG-540-1-2	TG-540-2-2	96	148						
TG-540-1-3	TG-540-2-3	100	152						
TG-540-1-4	TG-540-2-4	120	172						
TG-540-1-5	TG-540-2-5	160	212						

七字把手
Charging pile handle

TG-545



商品介紹:
- 表面處理:
  TG-545-1:不鏽鋼(4=鏡光)
  TG-545-2:鐵(1=鉻)
- 材質:不鏽鋼、鐵

Product description:
- Surface treatment:
  TG-545-1: Stainless steel (4 = mirror light)
  TG-545-2: Iron (1 = chromium,)
- Material: Stainless steel, Iron

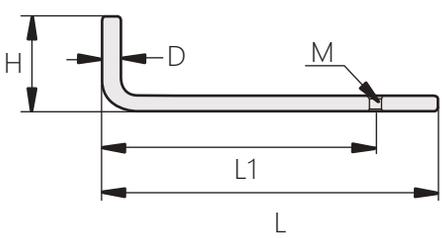

商品型號		L	D	H	L1	M
不鏽鋼	鐵					
TG-545-1-1	TG-545-2-1	90	Ø5	25	61.5	M3
TG-545-1-2	TG-545-2-2			30	60	

帶安裝板圓形把手

Round handle with mounting plate

TG-537



商品介紹:
- ■安裝方便，簡潔大方
- ■表面處理:
  TG-537-1:不鏽鋼(4=鏡光)
  TG-537-2:鐵(1=鉻)
- ■材質:鐵、不鏽鋼

Product description:
- ■Easy to install, simple and generous
- ■Surface treatment:
  TG-537-1: Stainless steel (4=mirror)
  TG-537-2: Iron (1 = chromium)
- ■Material: Stainless steel, Iron

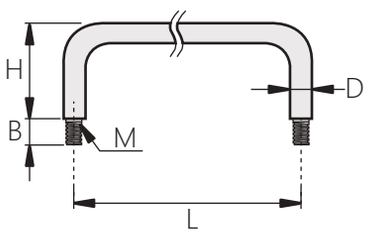

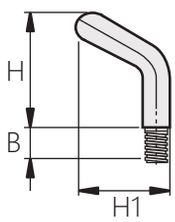

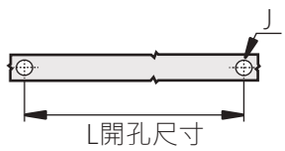

商品型號		L	D	H	M	J	B	D2
不鏽鋼	鐵							
TG-537-1-1	TG-537-2-1	100	Ø8	32	M6	12	18	Ø7
TG-537-1-2	TG-537-2-2	120		40				
TG-537-1-3	TG-537-2-3	88	Ø10	47		15	40	
TG-537-1-4	TG-537-2-4	100						
TG-537-1-5	TG-537-2-5	120						
TG-537-1-6	TG-537-2-6	125						

四方包膠把手

Square rubber handle

TG-541



商品介紹:
- ■ 表面處理:
  TG-541:鐵 (2=鎳)
- ■ 材質:鐵

Product description:
- ■ Surface treatment:
  TG-541: Iron (2=nickel)
- ■ Material: Iron



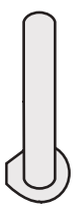

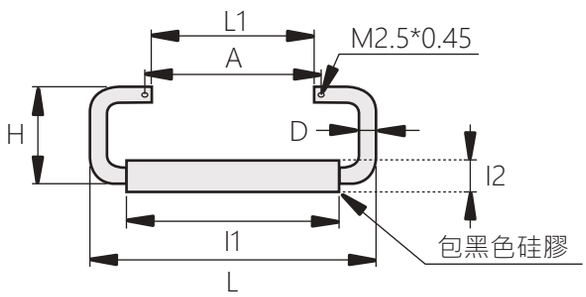

商品型號	L	D	H	L1	A	I1	I2
TG-541	113	Ø7	41.4	64	69	84	13

帶安裝板圓形把手

Round handle with mounting plate

TG-536



商品介紹:

- 圓形把手設計
- 帶安裝板，更加牢靠
- 表面處理:
  TG-536-1:鐵(1=鉻)
  TG-536-2:不鏽鋼(4=鏡光)
- 材質:鐵、不鏽鋼

Product description:

- Round handle design
- With mounting plate, more secure
- Surface treatment:
  TG-536-1: Iron (1 = chromium)
  TG-536-2: Stainless steel (4=mirror)
- Material: Iron, Stainless steel

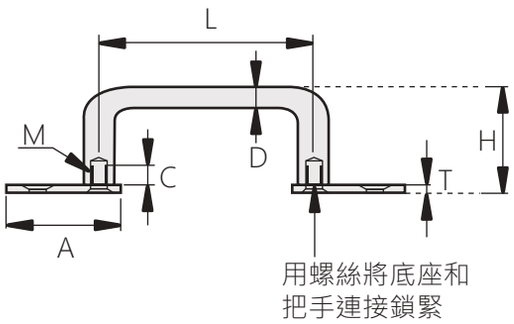

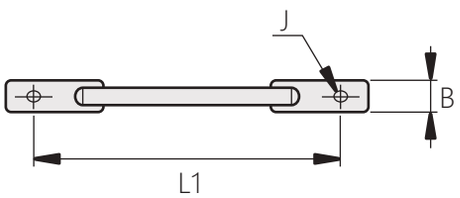

商品型號		L	L1	D	H	M	C	A	B	T	J
鐵	不鏽鋼										
TG-536-1-1	TG-536-2-1	80	104	Ø10	42	M5	10	26	16	5	Ø5.4*2
TG-536-1-2	TG-536-2-2	100	124								
TG-536-1-3	TG-536-2-3	110	134								
TG-536-1-4	TG-536-2-4	120	144								
TG-536-1-5	TG-536-2-5	125	149								
TG-536-1-6	TG-536-2-6	160	184								
TG-536-1-7	TG-536-2-7	200	224								
TG-536-1-8	TG-536-2-8	250	274								

側裝把手

Side handle

TG-543



商品介紹:

- 表面處理:
  TG-543-1:不鏽鋼(4=鏡光)
  TG-543-2:鐵(1=鉻)
- 材質:不鏽鋼、鐵

Product description:

- Surface treatment:
  TG-543-1: Stainless steel (4 = mirror light)
  TG-543-2: Iron (1 = chromium)
- Material: Stainless steel, Iron

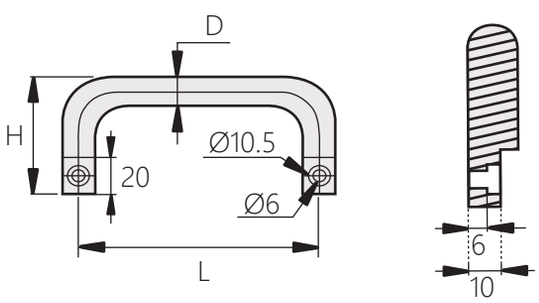

商品型號		L	D	H
不鏽鋼	鐵			
TG-543-1-1	TG-543-2-1	100	Ø16	64
TG-543-1-2	TG-543-2-2	120		
TG-543-1-3	TG-543-2-3	138		

外裝橢圓把手

Exterior oval handle

TG-520



商品介紹:
- 安裝方便，簡潔大方
- 表面處理:
  TG-520-1:不鏽鋼(4=鏡光)
  TG-520-2:鋁(4=鏡光、5=氧化、6=噴砂、8=烤漆)
- 材質:不鏽鋼、鋁

Product description:
- Easy to install, simple and generous
- Surface treatment:
  TG-520-1:Stainless steel (4=mirror light)
  TG-520-2:Aluminum (4=mirror light, 5 = oxidation, 6=sandblasting, 8=painting)
- Material: Stainless steel, Aluminum

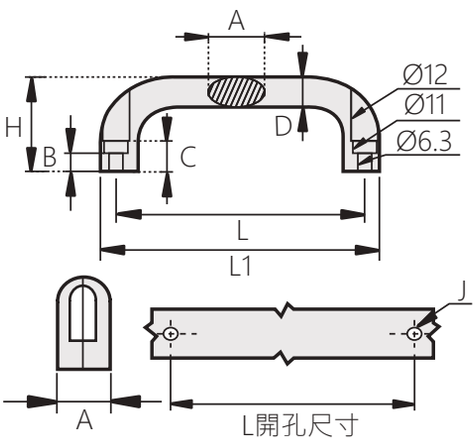

商品型號		L	A	D	H	C	B	L1	J
不鏽鋼	鋁								
TG-520-1-1	TG-520-2-1	100	26	17	47	17	10.5	114	Ø7.5
TG-520-1-2	TG-520-2-2	116			53			130	
TG-520-1-3	TG-520-2-3	120						134	
TG-520-1-4	TG-520-2-4	132			55			146	
TG-520-1-5	TG-520-2-5	150			67			164	
TG-520-1-6	TG-520-2-6	164			57			178	
TG-520-1-7	TG-520-2-7	196						210	

包膠外裝折疊把手

Square handle

TG-526



商品介紹:
- 安裝方便，簡潔大方
- 表面處理:
  TG-526:不鏽鋼(4=鏡光)
- 材質:不鏽鋼

Product description:
- Easy to install, simple and generous
- Surface treatment:
  TG-526: Stainless steel (4=mirror)
- Material: Stainless steel

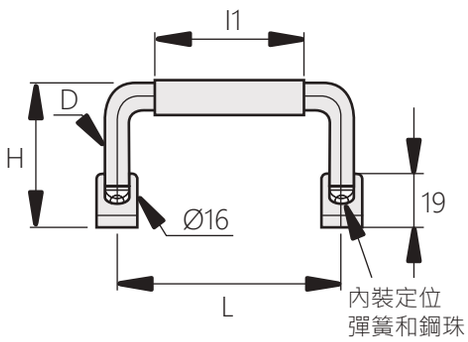

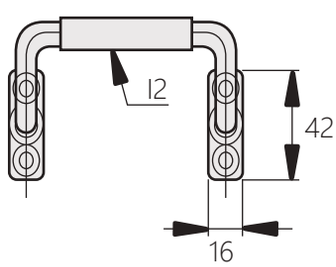

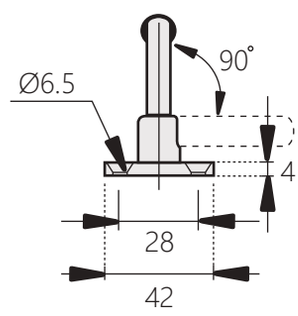

商品型號	L	D	H	I2	I1	開孔孔徑
TG-526	100	Ø9	49	Ø12.7	77	Ø7.5

焊接把手

Welding handle

TG-533



商品介紹:

- 安裝方便，簡潔大方
- 表面處理:
  TG-533-1:不鏽鋼(4=鏡光)
  TG-533-2:鐵(1=鉻)
- 材質:不鏽鋼、鐵

Product description:

- Easy to install, simple and generous
- Surface treatment:
  TG-533-1: Stainless steel (4=mirror light)
  TG-533-2: Iron (1=chromium)
- Material: Stainless steel, iron

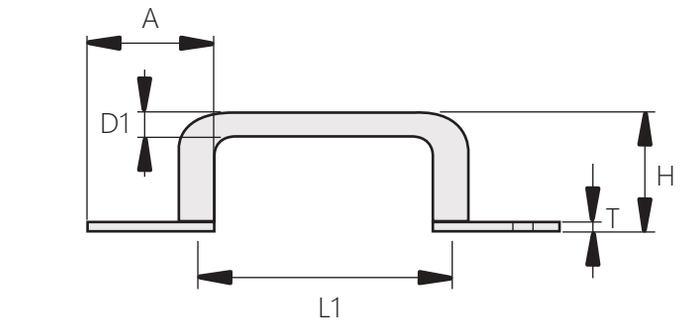

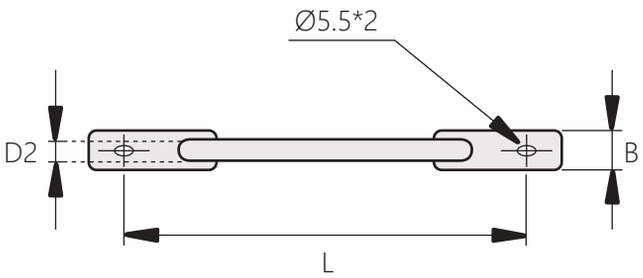

商品型號		L	L1	規格	D1	D2	H	A	B	T
不鏽鋼	鐵									
TG-533-1-1	TG-533-2-1	110	70	圓形本體	Ø10		51	35	17	4
TG-533-1-2	TG-533-2-2	120	80							
TG-533-1-3	TG-533-2-3	125	85							
TG-533-1-4	TG-533-2-4	160	120							
TG-533-1-5	TG-533-2-5	200	160							
TG-533-1-6	TG-533-2-6	250	210							
TG-533-1-7	TG-533-2-7	110	70	橢圓形本體	8	12	44	34		
TG-533-1-8	TG-533-2-8	120	80							
TG-533-1-9	TG-533-2-9	125	85							
TG-533-1-10	TG-533-2-10	160	120							
TG-533-1-11	TG-533-2-11	200	160							
TG-533-1-12	TG-533-2-12	250	210							

包膠折疊把手

Plastic folding handle

TG-504



商品介紹:

- 定位鋼珠彈簧
- 表面處理:
  TG-504-1:不鏽鋼(4=鏡光)
  TG-504-2:鐵(1=鉻)
- 材質:鐵、不鏽鋼

Product description:

- Mounting spring and steel ball inside
- Surface treatment:
  TG-504-1: Stainless steel (4 = mirror light)
  TG-504-2: Iron (1 = chromium)
- Material: Iron, Stainless steel

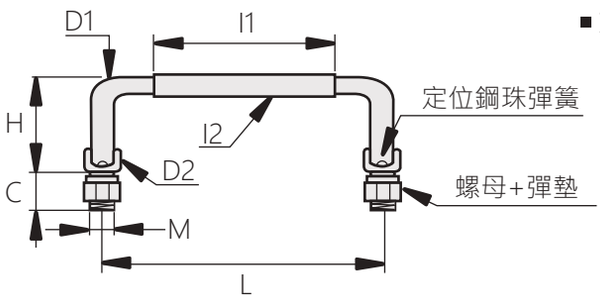

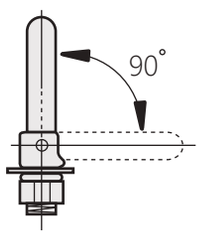

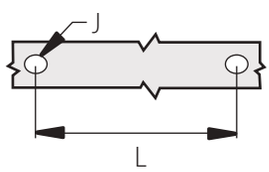

開孔尺寸

商品型號		L	D1	H	M	C	D2	J	I2	I1
不鏽鋼	鐵									
TG-504-1-1	TG-504-2-1	100	Ø9	41.5	M10	16	Ø16	2-Ø11	Ø12.8	77
TG-504-1-2	TG-504-2-2	119	Ø8.8						Ø18	90
TG-504-1-3	TG-504-2-3	120								
TG-504-1-4	TG-504-2-4	119		75		30				

折疊把手

Folding handle

TG-515



商品介紹:

- 定位鋼珠彈簧
- 表面處理:
  TG-515-1:不鏽鋼(4=鏡光),TG-515-2:鐵(1=鉻)
- 材質:鐵、不鏽鋼

Product description:

- Positioning ball spring
- Surface treatment:
  TG-515-1: Stainless steel (4 = mirror light)
  TG-515-2: Iron (1 = chromium)
- Material: Iron, Stainless steel

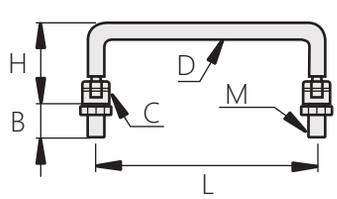

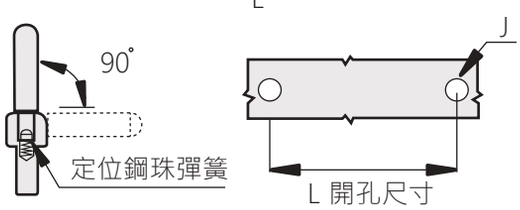

商品型號		L	D	H	M	C	J
不鏽鋼	鐵						
TG-515-1-1	TG-515-2-1	90	Ø6.5	37.5	2-6	14	2-Ø7
TG-515-1-2	TG-515-2-2	100					
TG-515-1-3	TG-515-2-3	101.5					

橢圓形不鏽鋼把手

Oval stainless steel handle

TG-512



商品介紹:

- 表面處理:
  TG-512:不鏽鋼(4=鏡光、9=拉絲)
- 材質:不鏽鋼

Product description:

- Surface treatment:
  TG-512: Stainless steel (4 = mirror,9 = drawing)
- Material: Stainless steel

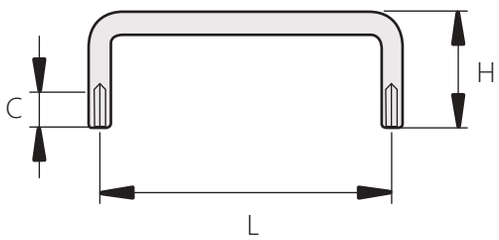

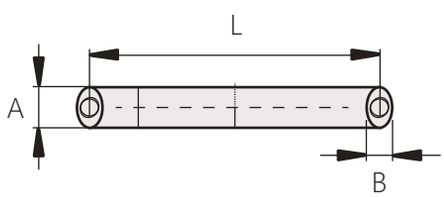

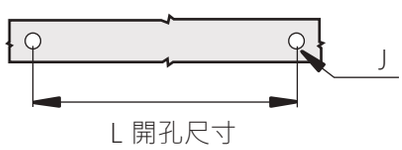

商品型號	L	A	B	H	M	C	J
TG-512-1-1	80	12	8	40	M5	13	2-Ø5.5
TG-512-1-2	90						
TG-512-1-3	100						
TG-512-1-4	120						
TG-512-1-5	125						
TG-512-1-6	160						
TG-512-1-7	200						
TG-512-1-8	250						
TG-512-2-1	90	16	10	35		6	
TG-512-2-2	100						
TG-512-2-3	120			40		8	
TG-512-3-1	75	20	13	47	M6	10	2-Ø7
TG-512-3-2	100						
TG-512-3-3	112			49			
TG-512-3-4	120			51			
TG-512-3-5	128						
TG-512-3-6	160						
TG-512-4-1	112	26	17	53	M8	12	2-Ø9
TG-512-4-2	120			55			
TG-512-4-3	128						
TG-512-4-4	160			57			
TG-512-4-5	180						
TG-512-4-6	192						
TG-512-4-7	300						
TG-512-4-8	350						
TG-512-4-9	400						

折疊把手

Folding Handle

TG-508



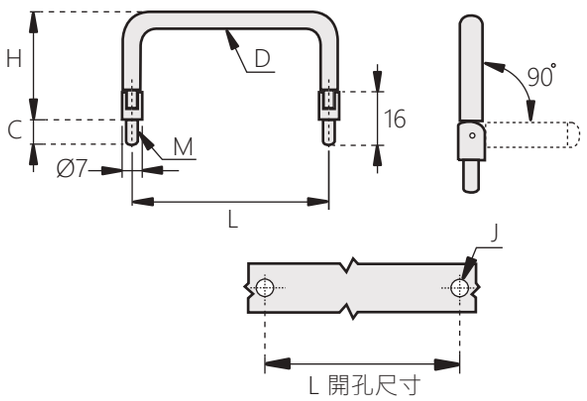

商品介紹:

- 表面處理:
  TG-508-1:不鏽鋼(4=鏡光)
  TG-508-2:鐵(1=鉻)
- 材質:不鏽鋼、鐵

Product description:

- Surface treatment:
  TG-508-1: Stainless steel (4 = mirror light)
  TG-508-2: Iron (1=chromium)
- Material: Stainless steel, iron

商品型號		L	D	H	M	C	J
不鏽鋼	鐵						
TG-508-1-1	TG-508-2-1	55	Ø6	25	M4	8	Ø4.5
TG-508-1-2	TG-508-2-2	60					
TG-508-1-3	TG-508-2-3	70					
TG-508-1-4	TG-508-2-4	74					
TG-508-1-5	TG-508-2-5	84					
TG-508-1-6	TG-508-2-6	90					
TG-508-1-7	TG-508-2-7	100					
TG-508-1-8	TG-508-2-8	102					
TG-508-1-9	TG-508-2-9	122					
TG-508-1-10	TG-508-2-10	138					

折疊把手

Folding Handle

TG-509



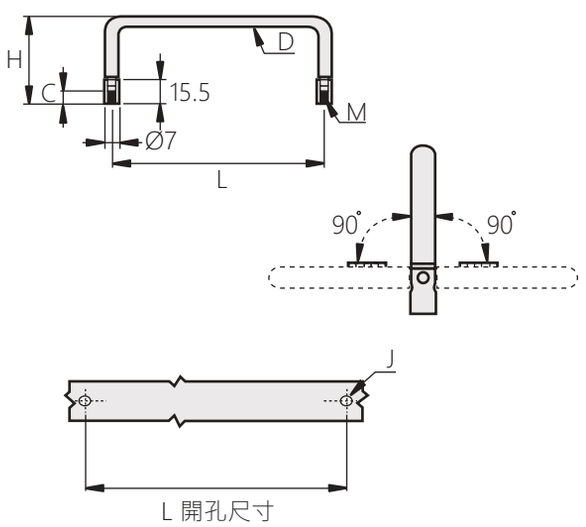

商品介紹:

- 表面處理:
  TG-509-1: 不鏽鋼(4=鏡光)
  TG-509-2: 鐵(1=鉻)
- 材質:不鏽鋼、鐵

Product description:

- Surface treatment:
  TG-509-1: Stainless steel (4=mirror)
  TG-509-2: Iron (1=chromium)
- Material: Stainless steel, Iron

商品型號		L	D	H	M	C	J
不鏽鋼	鐵						
TG-509-1-1	TG-509-2-1	55	Ø6	44	M4	6	Ø4.5
TG-509-1-2	TG-509-2-2	60					
TG-509-1-3	TG-509-2-3	70					
TG-509-1-4	TG-509-2-4	74					
TG-509-1-5	TG-509-2-5	84					
TG-509-1-6	TG-509-2-6	90					
TG-509-1-7	TG-509-2-7	100					
TG-509-1-8	TG-509-2-8	102					
TG-509-1-9	TG-509-2-9	122					
TG-509-1-10	TG-509-2-10	138					

折疊把手

Folding Handle

TG-506



商品介紹:

- 內安裝定位彈簧和鋼珠
- 表面處理:
  TG-506-1:不鏽鋼(4=鏡光),TG-506-2:鐵(1=鉻)
- 材質:鐵、不鏽鋼
- 備註:TG-506-1-9,TG-506-2-9此型號有銀色(W)與黑色(B)

Product description:

- Mounting spring and steel ball inside
- Surface treatment:
  TG-506-1: Stainless steel (4=mirror)
  TG-506-2: Iron (1 = chromium)
- Material: Iron, Stainless steel
- Note: TG-506-1-9, TG-506-2-9 This model has silver (W) and black (B).

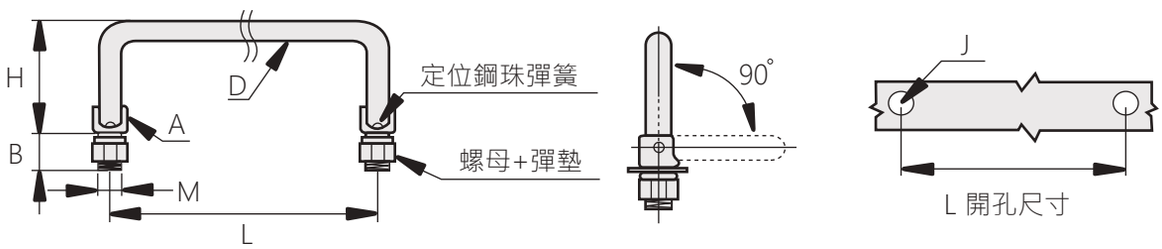

商品型號		L	D	H	M	B	A	J
不鏽鋼	鐵							
TG-506-1-1	TG-506-2-1	90	Ø8.8	41.5	M10	16	Ø16	2-Ø11
TG-506-1-2	TG-506-2-2	100						
TG-506-1-3	TG-506-2-3	119						
TG-506-1-4	TG-506-2-4	120						
TG-506-1-5	TG-506-2-5	135						
TG-506-1-6	TG-506-2-6	149						
TG-506-1-7	TG-506-2-7	155						
TG-506-1-8	TG-506-2-8	160						
TG-506-1-9	TG-506-2-9	100	Ø9	39		18		
TG-506-1-10	TG-506-2-10			43		15		Ø10.5
TG-506-1-11	TG-506-2-11		Ø10	44		14	Ø18	2-Ø11
TG-506-1-12	TG-506-2-12	120						
TG-506-1-13	TG-506-2-13	180						
TG-506-1-14	TG-506-2-14	55	Ø6	32	M6	13	Ø11	2-Ø7
TG-506-1-15	TG-506-2-15	60						
TG-506-1-16	TG-506-2-16	70						
TG-506-1-17	TG-506-2-17	84						
TG-506-1-18	TG-506-2-18	90						
TG-506-1-19	TG-506-2-19	100						
TG-506-1-20	TG-506-2-20	102						
TG-506-1-21	TG-506-2-21	122						

折疊把手

Folding Handle

TG-503



商品介紹:

- 內安裝定位彈簧和鋼珠
- 表面處理:
  TG-503-1:鐵(1=鉻),TG-503-2:不鏽鋼(4=鏡光)
- 材質:鐵、不鏽鋼

Product description:

- Mounting spring and steel ball inside
- Surface treatment:
  TG-503-1: Iron (1=chromium)
  TG-503-2: Stainless steel (4 = mirror)
- Material: Iron, Stainless steel

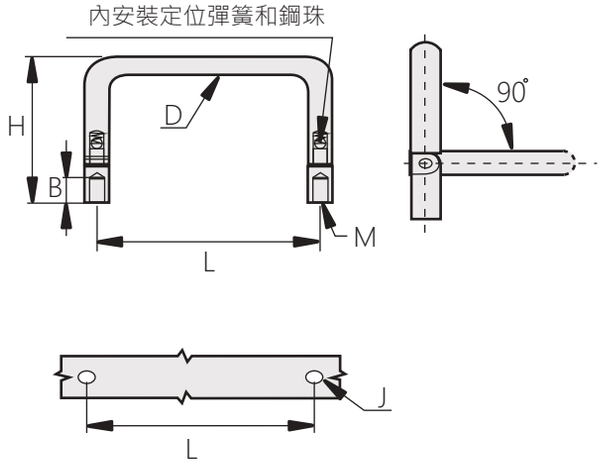

開孔尺寸

商品型號		L	D	H	M	B	J
鐵	不鏽鋼						
TG-503-1-1	TG-503-2-1	72	Ø8	50	2-5	6	2-Ø5.5
TG-503-1-2	TG-503-2-2	80					
TG-503-1-3	TG-503-2-3	90					
TG-503-1-4	TG-503-2-4	100					
TG-503-1-5	TG-503-2-5	120					

折疊把手

Folding Handle

TG-505



商品介紹:

- 內安裝彈簧鋼珠
- 表面處理:
  TG-505-1:鐵(1=鉻),TG-505-2:不鏽鋼(4=鏡光)
- 材質:鐵、不鏽鋼

Product description:

- Mounting spring and steel ball inside
- Surface treatment:
  TG-505-1: Iron (1=chromium)
  TG-505-2: Stainless steel (4=mirror)
- Material: Iron, Stainless steel

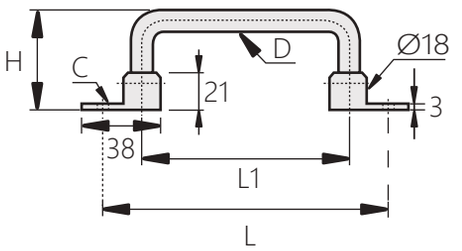

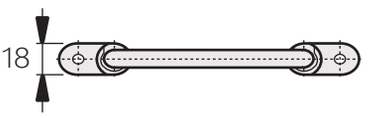

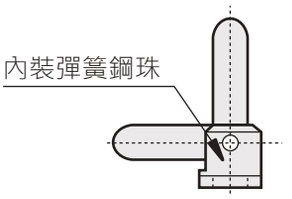

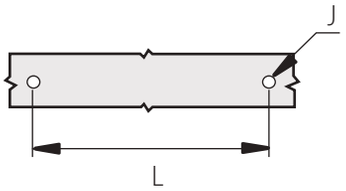

商品型號		L	L1	D	H	C	J
鐵	不鏽鋼						
TG-505-1-1	TG-505-2-1	138	100	Ø10	46	Ø5.5	2-Ø5.5
TG-505-1-2	TG-505-2-2	158	120				
TG-505-1-3	TG-505-2-3	180	142				
TG-505-1-4	TG-505-2-4	218	180				

外裝焊接四方把手

External welding square handle

TG-525



商品介紹:
- 安裝方便，簡潔大方
- 沉頭孔設計
- 表面處理：
  TG-525:不鏽鋼(4=鏡光、9=拉絲)
- 材質:不鏽鋼

Product description:
- Easy to install, simple and generous
- Countersunk hole design
- Surface treatment:
  TG-525: Stainless steel
  (4 = mirror light,9 = wire drawing)
- Material: Stainless steel

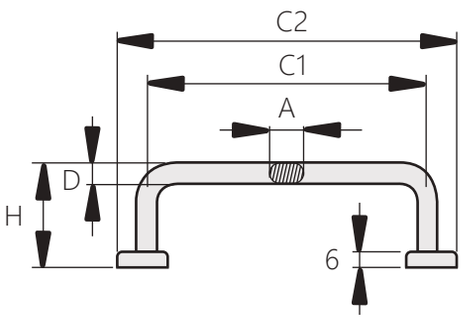

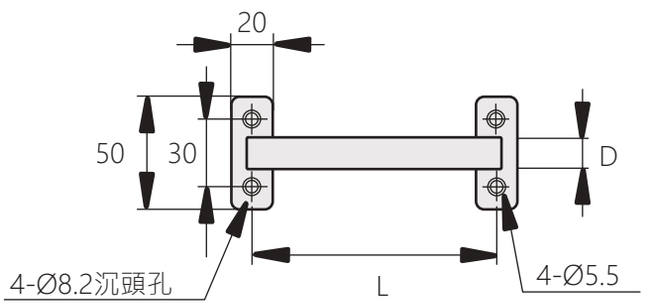

商品型號	L	C	D	A	C1	C2	開孔孔徑
TG-525-1	100	14	8	40	97	120	Ø6
TG-525-2	115				112	135	
TG-525-3	125				122	145	
TG-525-4	160				157	180	
TG-525-5	200				197	220	

帶安裝板雙彎把手

Double-bend handle with mounting plate

TG-535

商品介紹:
- 安裝方便，簡潔大方
- 表面處理:
  TG-535:鋁(5=氧化、6=噴砂)
- 材質:鋁

Product description:
- Easy to install, simple and generous
- Surface treatment:
  TG-535: Aluminum (5 = oxidation, 6 = sandblasting)
- Material: Aluminum



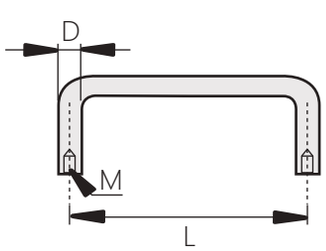

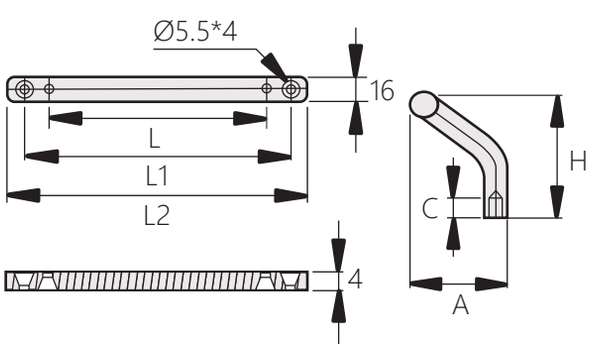

商品型號	L	D	H	M	C	A	L1	L2
TG-535-1	110	Ø10	47	M5	13	40	127	145
TG-535-2	120						147	165
TG-535-3	125						152	170

斜拉把手

Cable pull handle

TG-522

CAD



商品介紹:

- 安裝方便，簡潔大方
- 表面處理：
  TG-522：鋁(4=鏡光、5=氧化、6=噴砂、8=烤漆)
- 材質:鋁

Product description:

- Easy to install, simple and generous
- Surface treatment:
  TG-523: Aluminum (4 = mirror light, 5 = oxidation, 6 = sandblasting, 8 = baking paint)
- Material: Aluminum

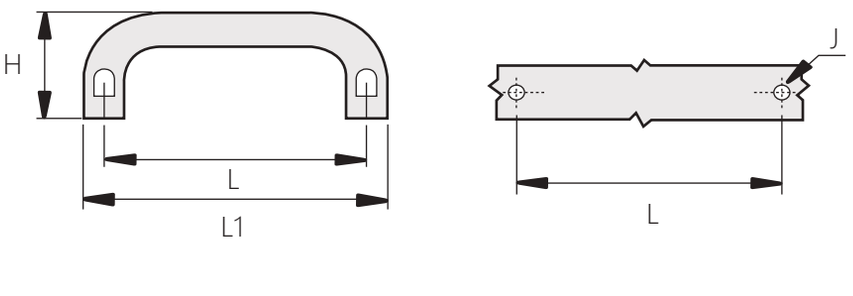

商品型號	L	A	B	H	D	D1	H1	L1	H2	J
TG-522	112	20	13	48	Ø6.5	Ø10.5	50	125	7	Ø7.5

斜拉把手

Cable pull handle

TG-523

CAD



商品介紹:

- 安裝方便，簡潔大方
- 表面處理：
  TG-523：鋁(4=鏡光、5=氧化、6=噴砂、8=烤漆)
- 材質:鋁

Product description:

- Easy to install, simple and generous
- Surface treatment:
  TG-523: Aluminum (4 = mirror light, 5 = oxidation, 6 = sandblasting, 8 = baking paint)
- Material: Aluminum

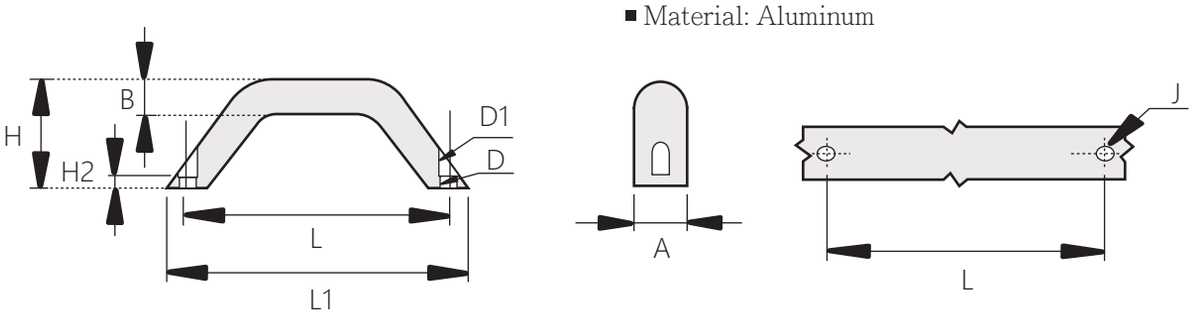

商品型號	L	A	B	H	D	D1	L1	H2	J
TG-523-1	90	19	12	41	Ø5.3	Ø9	107	5	Ø6.3
TG-523-2	93.5	20	13	44	Ø6.5	Ø10.5	112	5	Ø7.5
TG-523-3	130	26	17	57	Ø8.5	Ø13.3	149	5	Ø9.5

斜拉把手

Cable pull handle

TG-521



商品介紹:

- 安裝方便，簡潔大方
- 表面處理：
  TG-521-1：不鏽鋼
  (4=鏡光、9=拉絲)
  TG-521-2：鋁
  (4=鏡光、5=氧化、6=噴砂、8=烤漆)
- 材質:不鏽鋼、鋁
- 備註:TG-521-2-2B(W),TG-521-2-3B(W)有黑色與銀色

Product description:

- Easy to install, simple and generous
- Surface treatment:
  TG-521-1: Stainless steel
  (4=mirror light,9=drawing)
  TG-521-2: Aluminum
  (4=mirror 5=oxidation, 6=blasting, 8=painting)
- Material: Stainless steel, Aluminum
- Note: TG-521-2-2B (W), TG-521-2-3B (W) are available in black and silver.

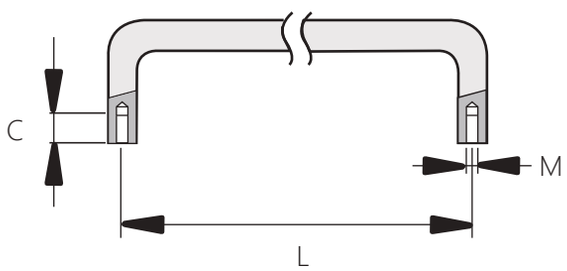

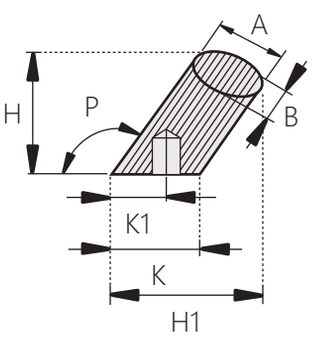

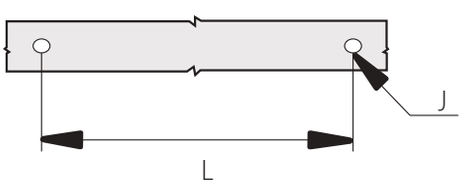

商品型號		L	A	B	H	M	C	H1	K	K1	P	J
不鏽鋼	鋁											
TG-521-1-1	TG-521-2-1	100	26	17	54	2-M8	12	47.4	28.7	14.3	115°	2-Ø9
TG-521-1-2	TG-521-2-2	128										
TG-521-1-3	TG-521-2-3	160										
TG-521-1-4	TG-521-2-4	112	20	13	48	2-M6	10	39.5	22.5	11.5		2-Ø7
TG-521-1-5	TG-521-2-5	128										
TG-521-1-6	TG-521-2-6	114			41		12	40	24	13.5	120°	
TG-521-1-7	TG-521-2-7	152										
TG-521-1-8	TG-521-2-8	203										

*TG-521-2-2B(W),TG-521-2-3B(W)有黑色與銀色

四方把手

Square handle

TG-519



商品介紹:

- 安裝方便，簡潔大方
- 表面處理：
  TG-519:鐵(1=鉻)
- 材質:鐵

Product description:

- Easy to install, simple and generous
- Surface treatment:
  TG-519: Iron (1 = chromium)
- Material: Iron

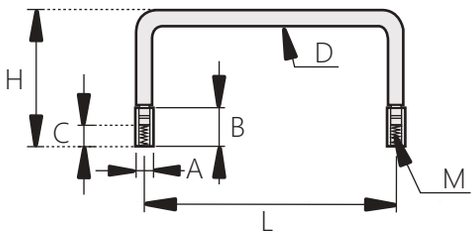

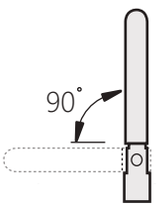

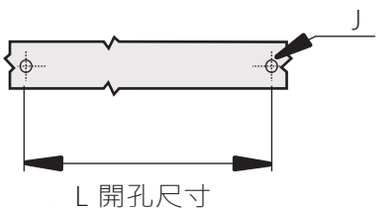

商品型號	L	D	H	M	C	J	A	B
TG-519-1	51	Ø6	27	M3	6	Ø3.5	Ø7	11
TG-519-2	60		35				Ø6	
TG-519-3	73		44.5					12
TG-519-4	30	Ø6.35	37.3		7		Ø7	11
TG-519-5	55		42.3	6-32	8	Ø4		

雙彎內裝把手

Square handle

TG-531

商品介紹:

- 安裝方便，簡潔大方
- 表面處理：
  TG-531-1: 鐵(1=鉻),TG-531-2: 不鏽鋼(4=鏡光)
- 材質:鐵、不鏽鋼
- 備註:TG-531-1-2B(W)有黑色與銀色

Product description:

- Easy to install, simple and generous
- Surface treatment:
  TG-531-1: Iron (1 = chromium)
  TG-531-2: Stainless steel(4=mirror light)
- Material: Iron, stainless steel
- Note: TG-531-1-2B (W) is available in black and silver



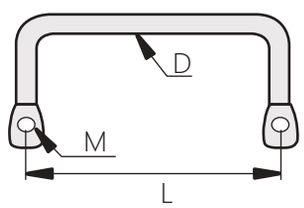

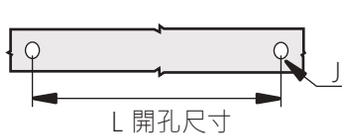

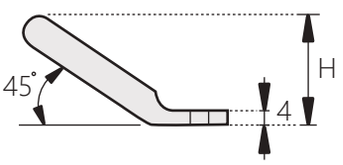

商品型號		L	D	H	M	J
鐵	不鏽鋼					
TG-531-1-1	TG-531-2-1	90	Ø8	35	2-Ø6.5	Ø7.5
TG-531-1-2	TG-531-2-2	100				
TG-531-1-3	TG-531-2-3	120				
	TG-531-2-4	112				

*TG-531-1-2B(W)有黑色與銀色

四方把手

Square handle

TG-517



商品介紹:

- 安裝方便，簡潔大方
- 表面處理：
  TG-517-1:不鏽鋼(4=鏡光、9=拉絲)
  TG-517-2:鐵(1=鉻)
  TG-517-3:鋅合金(鍍鉻)
- 材質:不鏽鋼、鐵、鋅合金

Product description:

- Easy to install, simple and generous
- Surface treatment:
  TG-517-1: Stainless steel (4=mirror light,9 = wire drawing)
  TG-517-2: Iron (1 = chromium)
  TG-517-3: Zinc alloy (chrome plated)
- Material: Stainless steel, Iron, Zinc alloy

[TG-517-1
TG-517-2]

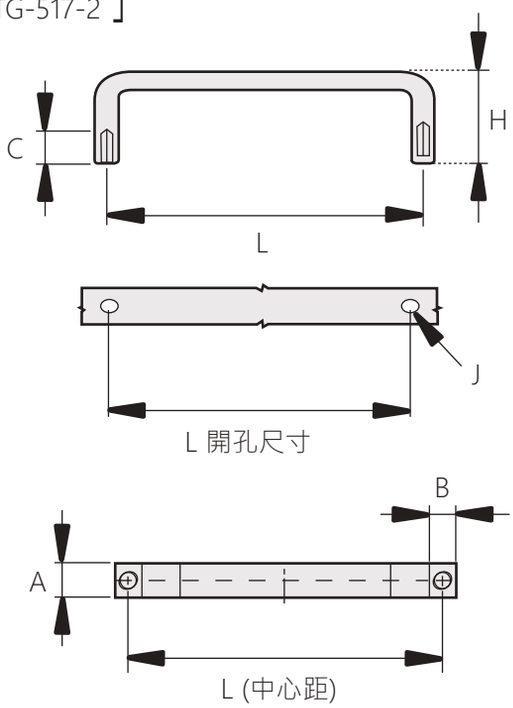

【TG-517-3-1】

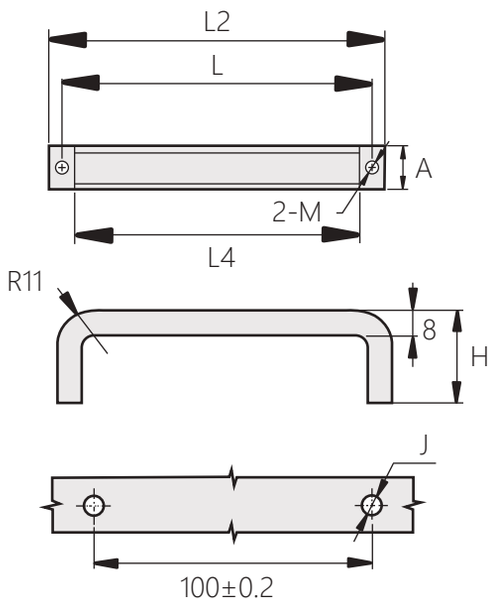

安裝示意圖

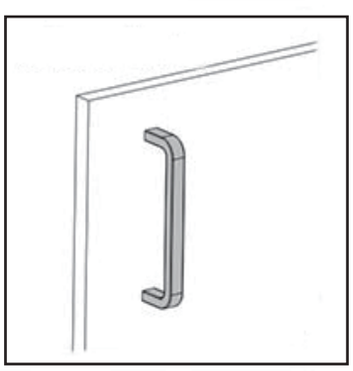

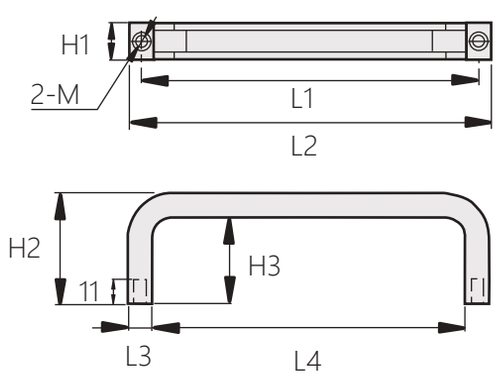

[TG-517-1-2
TG-517-1-4
TG-517-1-7
TG-517-1-8]

商品型號 / 不鏽鋼	L	L2	A	B	L4	H	H3	M	C	J
TG-517-1-1	80		14	8		30		M5	10	2-Ø6
TG-517-1-2	102	109.5	13.9	7.9	93.7	29.7	22.2		11	2-M5*0.8
TG-517-1-3	112		20	10		45		M6	10	2-Ø7
TG-517-1-4	123	132.6	15.8	9.7	113.2	39.5	29.8		11	2-M5*0.8
TG-517-1-5	128		20	10		45		M6	10	2-Ø7
TG-517-1-6	150									
TG-517-1-7	152.5	163	16.8	10.8	141.4	50	38.2		11	2-M6*1
TG-517-1-8	182.5	193.5		11.8	170					
TG-517-1-9	200		20	10		45		M6	10	2-Ø7
TG-517-1-10	250									
TG-517-1-11	350									
鐵	L	L2	A	B	L4	H	H3	M	C	J
TG-517-2-1	80		12	8		40		M5	13	2-Ø6
TG-517-2-2	100									
TG-517-2-3	125									
TG-517-2-4	160									
TG-517-2-5	200									
TG-517-2-6	250									
鋅合金	L	L2	A	B	L4	H	H3	M	C	J
TG-517-3-1	100	108	14		92	30		M5		2-Ø5.5

包膠外牙把手

TG-502

Folding Handle



商品介紹:

- 表面處理:
  TG-502-1:不鏽鋼(4=鏡光)
  TG-502-2:鐵(1=鉻)
- 材質:不鏽鋼、鐵
- 備註:如需底座請於型號加上〝Z〞

Product description:

- Surface treatment:
  TG-502-1: Stainless steel (4=mirror)
  TG-502-2: Iron (1 = chromium)
- Material: Stainless steel, Iron
- Note: If you need a base, please add '' Z '' to the model.

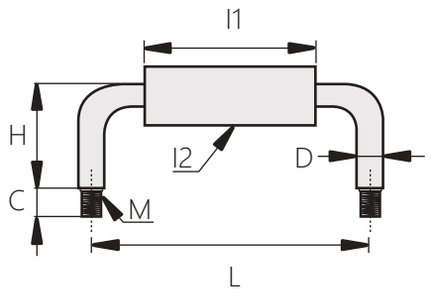

15.0*3.5底座

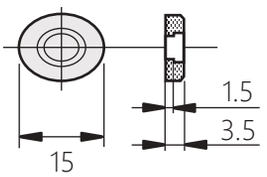

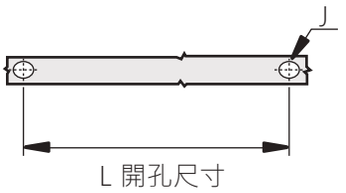

商品型號 不鏽鋼	商品型號 鐵	L	D	H	M	C	J	I2	I1
TG-502-1-1	TG-502-2-1	100	Ø9	40	M6	15	Ø7	Ø12.8	77
TG-502-1-2	TG-502-2-2	119	Ø8.8		M8		Ø9	Ø18	90
TG-502-1-3	TG-502-2-3	120			M6		Ø7		

*如需底座請於型號加上〝Z〞,例如:TG-502-1-1-Z

橢圓鋁把手

Elliptical aluminum handle

TG-516

CAD



商品介紹:

- 把手截面呈現橢圓形，穩定性好
- 方便握持，手感好
- 表面處理:
  TG-516:鋁(4=鏡光、5=氧化、6=噴砂、8=烤漆)
- 材質:鋁
- 備註:型號加上-B為黑色,-S為銀色,例如:TG-516-1-1-B為黑色,TG-516-1-1-S為銀色

Product description:

- Handle cross section is oval, good stability
- Easy to hold and feel good
- Surface treatment:
  TG-516: aluminum (4 = mirror light, 5 = oxidation, 6 = sandblasting, 8 = baking paint)
- Material: Aluminum
- Note: Model plus -B is black, -S is silver, for example: TG-516-1-1-B is Black, TG-516-1-1-S is silver.

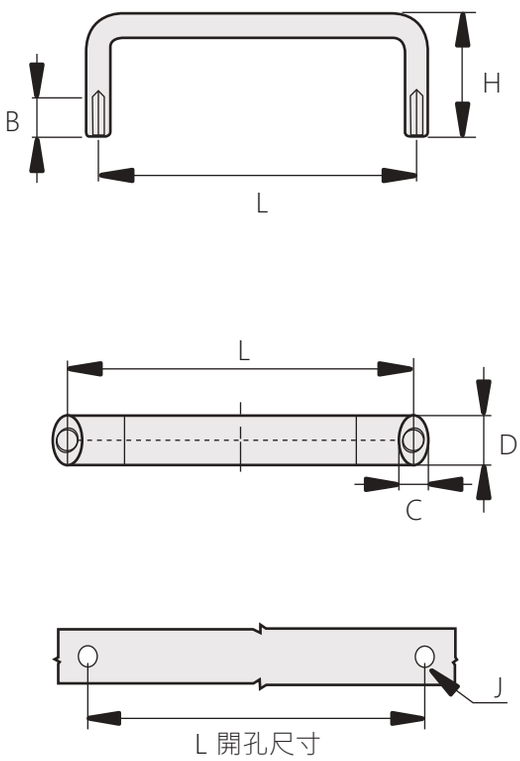

商品型號	L	D	C	H	M	B	J
TG-516-1-1	75	16	8	38	M5	10	2-Ø6
TG-516-1-2	100						
TG-516-1-3	125						
TG-516-1-4	150						
TG-516-1-5	175						
TG-516-1-6	30			38.1	M4		2-Ø5
TG-516-1-7	64						
TG-516-1-8	96						
TG-516-1-9	128						
TG-516-1-10	120		13	56.5	M8	12	2-Ø9
TG-516-2-1	75	20		47	M6	10	2-Ø7
TG-516-2-2	100						
TG-516-2-3	112			49			
TG-516-2-4	120			51			
TG-516-2-5	128						
TG-516-2-6	160						
TG-516-3-1	112	26	17	53	M8	12	2-Ø9
TG-516-3-2	120			55			
TG-516-3-3	128						
TG-516-3-4	160			57			
TG-516-3-5	180						
TG-516-3-6	192						
TG-516-3-7	300						
TG-516-3-8	350						
TG-516-3-9	400						

折疊拉手

Oval stainless steel handle

TG-556



商品介紹:

- 表面處理:
  TG-556-1:不鏽鋼(4=鏡光), TG-556-2:鐵(1=鉻)
- 材質:不鏽鋼、鐵
- 用途:自動化設備、製造業、電櫃箱

Product description:

- Surface treatment:
  TG-556-1: Stainless steel (4=mirror)
  TG-556-2: Iron (1=chromium)
- Material: Stainless steel, Iron
- Uses: Automation equipment, manufacturing, electrical cabinets.

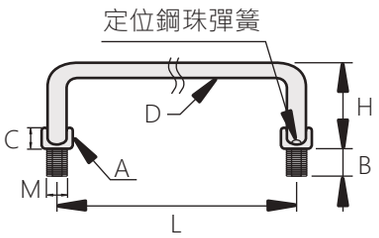

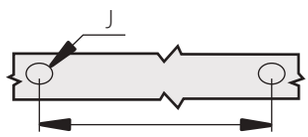

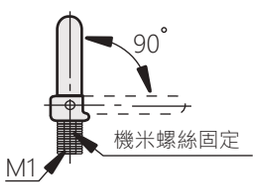

商品型號		L	D	H	M	B	A	C	M1	J
不鏽鋼	鐵									
TG-556-1-1	TG-556-2-1	54	Ø6	30	M6	12	Ø10	8	M3	2-Ø7
TG-556-1-2	TG-556-2-2	90		26	M5	7				2-Ø6
TG-556-1-3	TG-556-2-3	90	Ø8	32	M6	9	Ø14	9		2-Ø7
TG-556-1-4	TG-556-2-4	100								
TG-556-1-5	TG-556-2-5	100	Ø10	44	M10	15	Ø17	14	M5	2-Ø11
TG-556-1-6	TG-556-2-6	120								

折疊拉手

Oval stainless steel handle

TG-576



商品介紹:

- 表面處理:
  TG-576-1:不鏽鋼(4=鏡光), TG-576-2:鐵(1=鉻)
- 材質:不鏽鋼、鐵
- 用途:自動化設備、製造業、電櫃箱等

Product description:

- Surface treatment:
  TG-576-1: Stainless steel (4 = mirror light)
  TG-576-2: Iron (1=chromium)
- Material: Stainless steel, iron
- Uses: Automation equipment, manufacturing, electrical cabinets, etc.

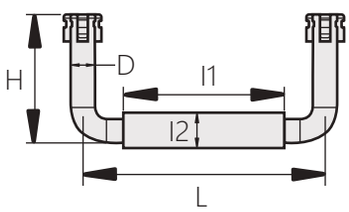

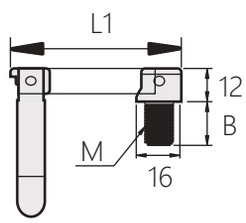

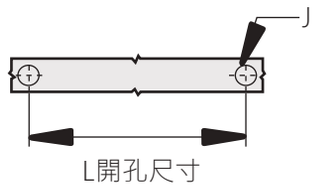

商品型號	材質	L	D	H	M	B	L1	I2	I1	J
TG-576-1	不鏽鋼	120	Ø8.8	42	M10	16	42	Ø18	90	Ø11
TG-576-2	鐵			68.5		21.5	37			

塑膠把手

TG-605

Plastic Handle



商品介紹:

- 接手強度高，安裝方便
- 材質:塑膠
- 表面處理:黑色
- 用途:烤箱、試驗箱、電櫃箱

Product description:

- High strength and easy installation
- Material: Plastic
- Surface treatment: Black
- Uses: Oven, test box, electric box

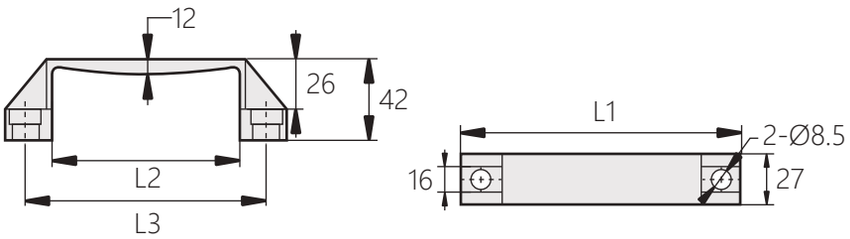

商品型號	L1	L2	L3
TG-605-1	133.4	91.4	112
TG-605-2	150	108	128.6

重型圓棒把手

TG-606

Round-Bar Handle



商品介紹:

- 能承受高強度的拉力，安裝方便快捷
- 中心距、底座顏色可自定或選擇
- 材質:鋅合金(ZDC)、不鏽鋼(SUS304)
- 表面處理:黑色烤漆、銀色噴塗
- 用途:烤箱、試驗箱、電櫃箱等
- 備註:可根據使用需要定制不同的安裝中心距，座子也可以選擇黑色或銀色，管厚度2.0MM

Product description:

- Can withstand high tensile strength, easy to install.
- Center distance, base color can be customized or selected.
- Material: Zinc alloy (ZDC), stainless steel (SUS304)
- Surface treatment: Black paint, silver spray
- Uses: Oven, test box, electric cabinet, etc.
- Note: Different installation center distances can be customized according to the needs of use. Can choose black or silver, tube thickness 2.0MM.

安裝示意圖



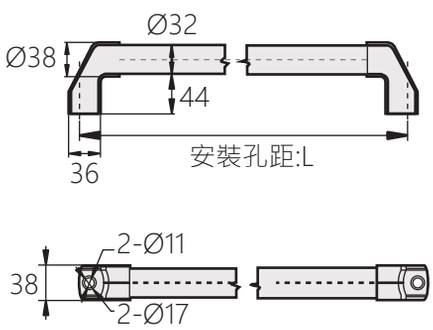

商品型號		底座顏色	底座材質	L1
不鏽鋼	鋅合金			
TG-606-1-1	TG-606-2-1	黑色烤漆	塑膠	250
TG-606-1-2	TG-606-2-2			300
TG-606-1-3	TG-606-2-3			500
TG-606-1-4	TG-606-2-4	銀色噴塗		250
TG-606-1-5	TG-606-2-5			300
TG-606-1-6	TG-606-2-6			500

不鏽鋼 U 型把手

Stainless Steel U Handles

TG-743



商品介紹:

- 安裝方便簡單
- 材質:不鏽鋼 304
- 表面處理:拋光
- 用途:機櫃、食品設備、工業用機櫃、工業機械、機床、金屬切割、醫療

Product description:

- Installation is simple and convenient
- Material: Stainless Steel 304
- Surface treatment: Polish
- Uses: Communication cubicle, Food Equipment, Industrial Enclosures, Industrial Machinery, Machine Tools and Metal Cutting, Medical.

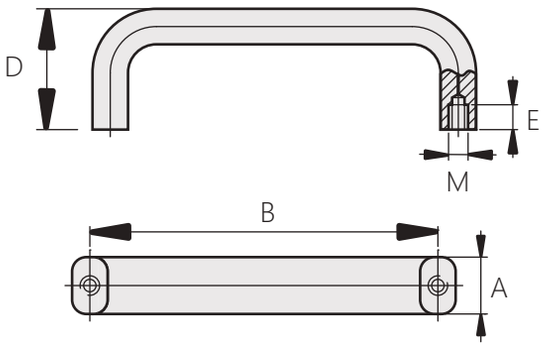

商品型號	A	B	M	D	E
TG-743-1	20	112	M6	45	10
TG-743-2		117			
TG-743-3		128			

鋅合金U型把手

Stainless Steel U Handles

TG-757



商品介紹:

- 安裝方便簡單
- 材質:鋅合金
- 表面處理:電鍍亮鉻
- 用途:機櫃、食品設備、工業用機櫃、工業機械、機床和金屬切割、醫療、販賣機

Product description:

- Installation is simple and convenient
- Material: Zinc alloy
- Surface treatment: Polish
- Uses: Communication Equipment, Food Equipment, Industrial Enclosures, Industrial Machinery, Machine Tools and Metal Cutting, Medical, Vending Machines.

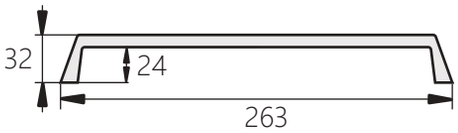

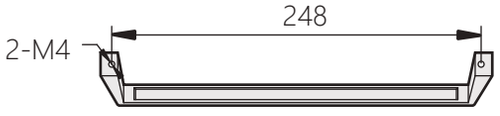

嵌入式彈簧摺疊把手

TG-329

Embedded Carring Handle (Spring Load)



商品介紹:

- 簡單的面板預製和螺絲安裝彈簧式設計，可快速抓取手柄，嵌入式安裝彰顯優質工業設計
- 材質:面盤 - 鐵、手柄 -PVC
- 表面處理:鍍鋅
- 用途:機櫃、配分電盤、機械設備

Product description:

- Simple panel prep and screw mount installation Flush-mount installation complements industrial design, Spring loaded option allows for quick access to the handle.
- Material: Panel-Steel ; Handle-PVC
- Surface treatment: Zinc Plated
- Uses: Communication Equipment, Control Panel, Cabinet Door, Machinery Equipment.

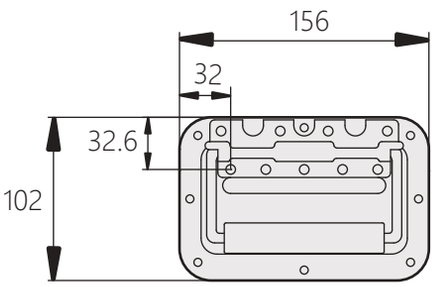

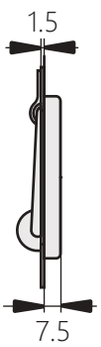

開孔尺寸

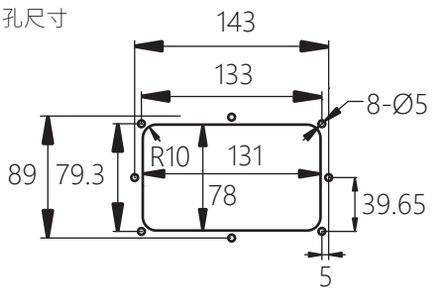

不鏽鋼弧形把手

TG-7375

Stainless Steel Arcuate Handle



商品介紹:

- 安裝方便簡單
- 材質:圓管 - 不鏽鋼、支座 :尼龍玻纖、螺栓：鐵材
- 表面處理:鋼鐵、螺栓:鍍鋅
- 用途:機櫃、食品設備、工業用機櫃、工業機械、機床、金屬切割、醫療

Product description:

- Installation is simple and convenient
- Material: Round Bar-Stainless Steel、Seat-PA ; Bolt:Steel
- Surface treatment: Bolt；Zinc plated
- Uses: Communication cubicle, Food Equipment, IndustrialEnclosures, Industrial Machinery, Machine Tools and Metal Cutting, Medical.

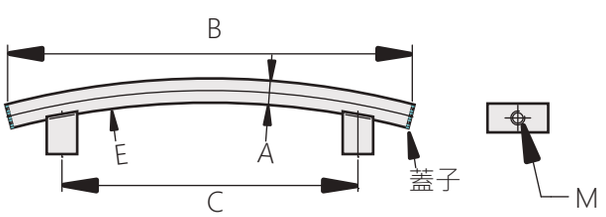

商品型號	A	B	C	M	E
TG-7375-1	31.8	376	180	M8	R1748
TG-7375-2		620	457		R950
TG-7375-3		700	529		R1654
TG-7375-4		717	543		R2038
TG-7375-5		700	600		R1729

不鏽鋼圓管型把手

Stainless Steel Round Bar Handle

TG-7373



商品介紹:

- 安裝方便簡單
- 材質:圓管 - 不鏽鋼、支座:尼龍玻纖、螺栓:鐵材
- 表面處理:螺栓 - 鍍鋅
- 用途:機櫃、食品設備、工業用機櫃、工業機械、機床、金屬切割、醫療

Product description:

- Installation is simple and convenient
- Material: Round Bar-Stainless Steel、Seat-PA ; Bolt:Steel
- Surface treatment: Bolt-Zinc plated
- Uses: Communication Equipment, Food Equipment, Industrial Enclosures, Industrial Machinery, Machine Tools and Metal Cutting, Medical.

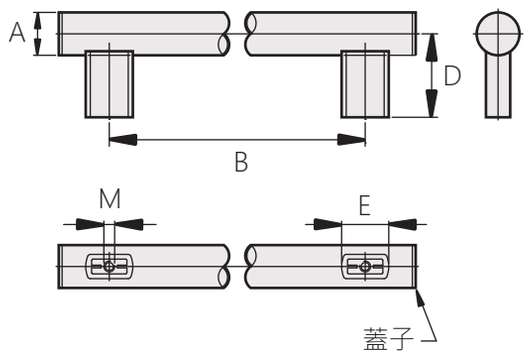

商品型號	A	B	M	D	E
TG-7373-1	31.8	200	M8	62	35
TG-7373-2		250			
TG-7373-3		300			
TG-7373-4		400			
TG-7373-5		500			
TG-7373-6		600			
TG-7373-7		918			

不鏽鋼弧型把手

Stainless Steel Arcuate Handle

TG-7374



商品介紹:

- 安裝方便簡單
- 材質:圓管 - 不鏽鋼、支座:尼龍玻纖、螺栓:鐵材
- 表面處理:鋼鐵、螺栓:鍍鋅
- 用途:機櫃、食品設備、工業用機櫃、工業機械、機床、金屬切割、醫療

Product description:

- Installation is simple and convenient
- Material: Round Bar-Stainless Steel、Seat-PA ; Bolt:Steel
- Surface treatment: Bolt-Zinc plated
- Uses: Communication Equipment, Food Equipment, Industrial Enclosures, Industrial Machinery, Machine Tools and Metal Cutting, Medical.

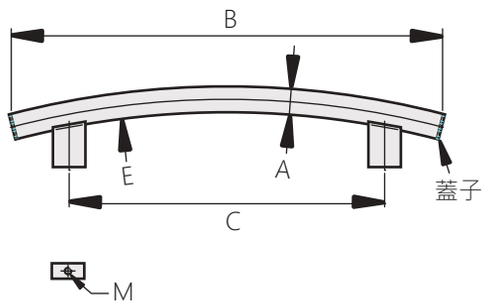

商品型號	A	B	C	M	E
TG-7374-1	31.8	530	400	M8	R1168
TG-7374-2		600	425		R1168
TG-7374-3		700	600		R1700
TG-7374-4		796	600		R4324
TG-7374-5		940	850		R2968
TG-7374-6		980	800		R4000

鋁合金把手

TG-1746

Aluminum Grip Handle



商品介紹:

- 安裝方便簡單
- 材質:鋁合金
- 表面處理:陽極銀色、陽極黑色
- 用途:機櫃、食品設備、工業用機櫃、工業機械、機床、金屬切割、醫療

Product description:

- Installation is simple and convenient
- Material: Aluminum
- Surface treatment: Anodizing Standard Silver ; Anodizing Standard Black.
- Uses: Communication Equipment, Food Equipment, Industrial Enclosures, Industrial Machinery, Machine Tools and Metal Cutting, Medical.

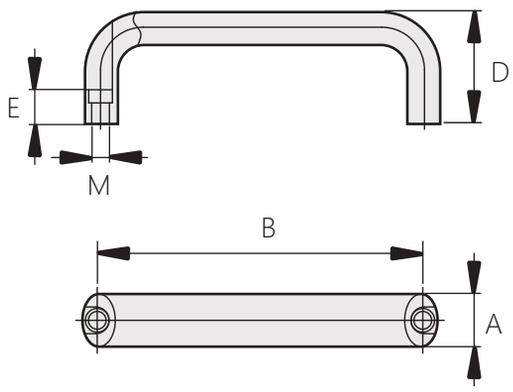

商品型號		A	B	M	D	E
陽極黑色	陽極銀色					
TG-1746-1-1	TG-1746-2-1	26	116	6.3	55	17
TG-1746-1-2	TG-1746-2-2		132			
TG-1746-1-3	TG-1746-2-3		164			
TG-1746-1-4	TG-1746-2-4		196			

鋁合金把手

TG-777

Aluminum Draw Handle



商品介紹:

- 安裝方便簡單
- 材質:鋁合金
- 表面處理:髮絲紋拋光
- 用途:機櫃、食品設備、工業用機櫃、工業機械、機床、金屬切割、醫療

Product description:

- Installation is simple and convenient
- Material: Aluminum
- Surface treatment: Hair-Line Surface Treatment
- Uses: Communication Equipment, Food Equipment, Industrial Enclosures, Industrial Machinery, Machine Tools and Metal Cutting, Medical.

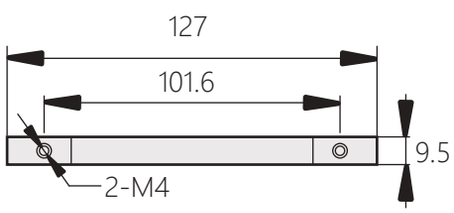

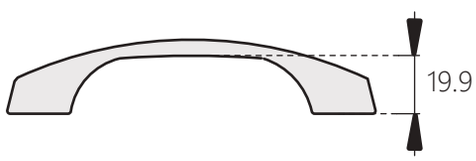

鋁合金把手

Aluminum Grip Handle

TG-748



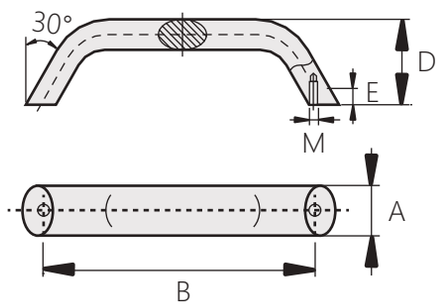

商品介紹:

- 安裝方便簡單
- 材質:鋁合金
- 表面處理:陽極黑色
- 用途:機櫃、食品設備、工業用機櫃、工業機械、機床、金屬切割、醫療

Product description:

- Installation is simple and convenient
- Material: Aluminum
- Surface treatment: Anodizing Standard Black
- Uses: Communication Equipment, Food Equipment, Industrial Enclosures, Industrial Machinery, Machine Tools and Metal Cutting, Medical.

商品型號	A	B	M	D	E
TG-748	20	120	M5	41	12

鋁合金把手

Aluminum Grip Handle

TG-750



商品介紹:

- 安裝方便簡單，提供多種尺寸
- 材質:鋁合金
- 表面處理:陽極銀色、陽極黑色
- 用途:機櫃、食品設備、工業用機櫃、工業機械、機床、金屬切割、醫療

Product description:

- Installation is simple and convenient, providing a variety of sizes.
- Material: Aluminum
- Surface treatment: Anodizing Standard Silver ; Anodizing Standard Black.
- Uses: Communication Equipment, Food Equipment, Industrial Enclosures, Industrial Machinery, Machine Tools and Metal Cutting, Medical.

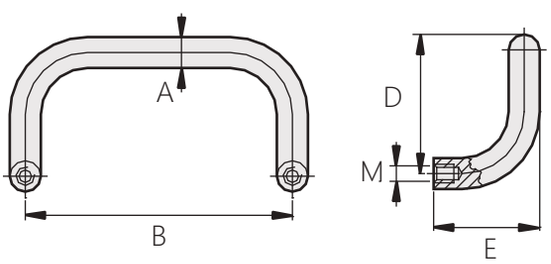

商品型號		A	B	M	D	E
陽極黑色	陽極銀色					
TG-750-1-1	TG-750-2-1	20	200	M8	105	68
TG-750-1-2	TG-750-2-2		300			

醫療設備拉手

Medical equipment handle

TG-1039



商品介紹:
- 材質:鋁合金和塑膠
- 表面處理:陽極銀色、噴沙黑色
- 用途:醫療相關設備、通信設備、廚房設備

Product description:
- Material: Aluminum alloy and plastic
- Surface treatment: Anodized silver, sandblasted black
- Uses: Medical related equipment, communication equipment,kitchen equipment

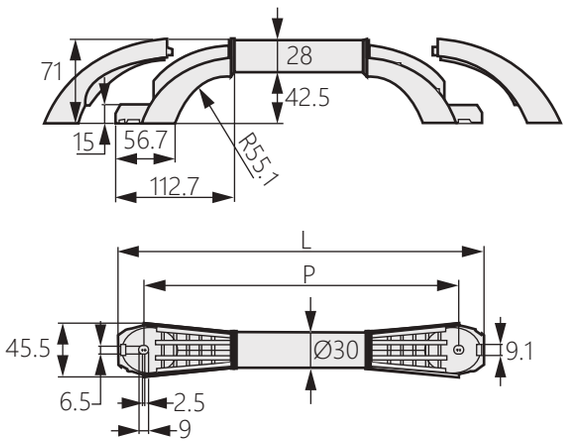

商品型號	P	L	座子顏色	鋁棒顏色
TG-1039-1-1	300	348.5	黑色	黑色
TG-1039-1-2				銀色
TG-1039-1-3			乳白色	黑色
TG-1039-1-4				銀色
TG-1039-2-1	500	548.5	黑色	黑色
TG-1039-2-2				銀色
TG-1039-2-3			乳白色	黑色
TG-1039-2-4				銀色

橢圓形拉手

Oval handle

TG-516-5



商品介紹:
- 材質:鋁合金
- 表面處理:陽極黑色或陽極銀色
- 用途:烤箱、試驗箱、自動化設備等

Product description:
- Material: Aluminum alloy
- Surface treatment: Anodized black or anodized silver
- Uses: Oven, test chamber, automation equipment, etc.

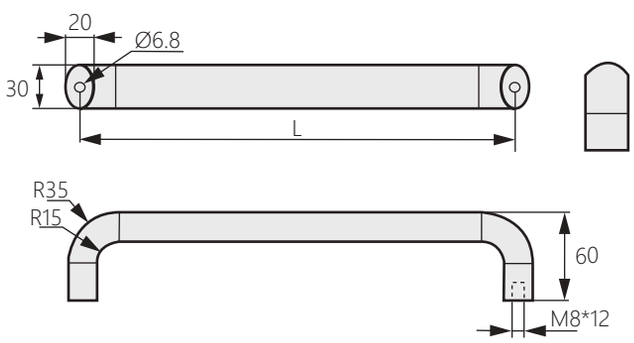

商品型號		L
黑色	銀色	
TG-516-5-1B	TG-516-5-1W	59
TG-516-5-2B	TG-516-5-2W	109
TG-516-5-3B	TG-516-5-3W	159
TG-516-5-4B	TG-516-5-4W	209

彈力折疊拉手

Elastic folding handle

TG-224



商品介紹:

- 內置緩衝柱，折疊手柄時無噪音
- 轉軸處安裝拐點緩沖片，開閉時手感回饋性好
- 材質:鋅合金（ZDC）
- 表面處理:鍍亮鉻
- 用途:控制設備、小型集裝箱、測量設備等

Product description:

- Built-in buffer column, no noise when folding handle
- The turning point buffer is installed at the shaft, which feels good when opening and closing
- Material: Zinc alloy (ZDC)
- Surface treatment: Bright chrome plating
- Uses: Control equipment, small containers, measuring equipment, etc.

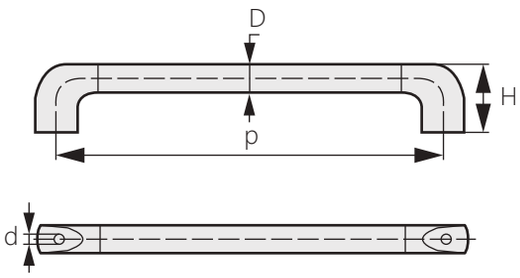

商品型號		P	D	H	d
黑色	橘色				
TG-224-1B	TG-224-1C	180	25	67	9
TG-224-2B	TG-224-2C	240			
TG-224-3B	TG-224-3C	300	34	85	11
TG-224-4B	TG-224-4C	400			
TG-224-5B	TG-224-5C	500			
TG-224-6B	TG-224-6C	1050			

不鏽鋼船舶拉手

Stainless steel ship handle

TG-1395



商品介紹:

- 三個支撐固定座
- 中間支撐可調節固定
- 沉頭孔安裝，使螺絲頭不外露、美觀
- 材質:不鏽鋼（SUS304）
- 表面處理:鏡面拋光
- 用途:船舶、浴室、高鐵、新能源設備等

Product description:

- Three support mounts
- Adjustable middle support
- Countersunk head installation, so that the screw head is not exposed and beautiful
- Surface treatment: Stainless steel (SUS304)
- Surface treatment: Mirror polishing

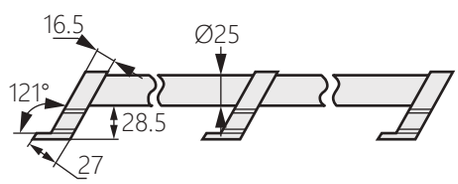

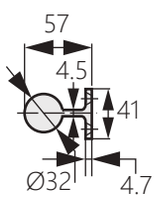

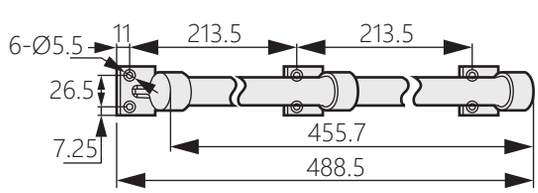

Fasteners DK
搭扣、扣件、磁鐵

Fasteners DK
搭扣、扣件、磁鐵

Fasteners DK
搭扣、扣件、磁鐵

Fasteners DK
搭扣、扣件、磁鐵

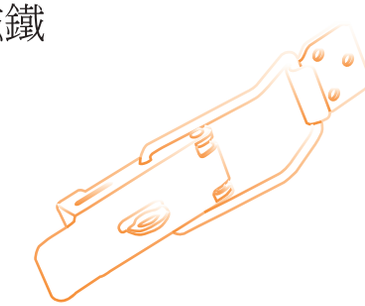

Fasteners DK
搭扣、扣件、磁鐵

平門搭扣

DK-052

Flat door buckle



商品介紹:

- 可安裝於側門或平門
- 可以加裝銷釘或鎖頭進行二次緊固
- 材質:不鏽鋼（SUS304）
- 表面處理:鏡面拋光
- 用途:機床、電櫃、集裝箱、機械設備等
- 備註:若箱體內壓力過大門可自行彈開

Product description:

- Can be mounted on side or flat doors
- Can be retrofitted with pins or locks
- Material: Stainless steel (SUS304)
- Surface treatment: Mirror polishing
- Uses: Machine tools, electrical cabinets, containers, machinery and equipment, etc.

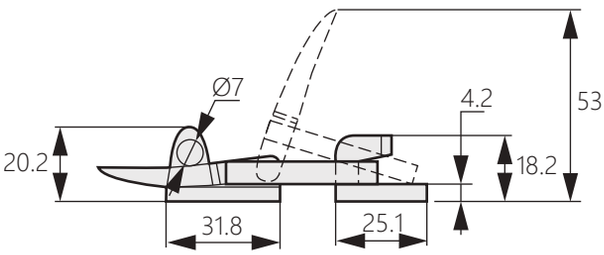

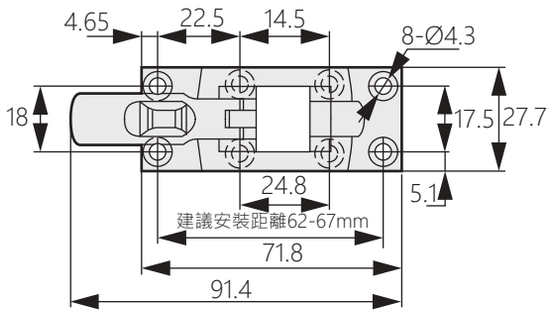

平門搭扣

DK-053

Flat door buckle



商品介紹:

- 可安裝於側門或平門
- 可以加裝銷釘或鎖頭進行二次緊固
- 材質:不鏽鋼 304
- 表面處理:鏡面拋光
- 用途:機床、電櫃、集裝箱、機械設備等

Product description:

- Can be mounted on side or flat doors
- Can be retrofitted with pins or locks
- Material: Stainless steel 304
- Surface treatment: Mirror polishing
- Uses: Machine tools, electrical cabinets, containers, machinery and equipment, etc.

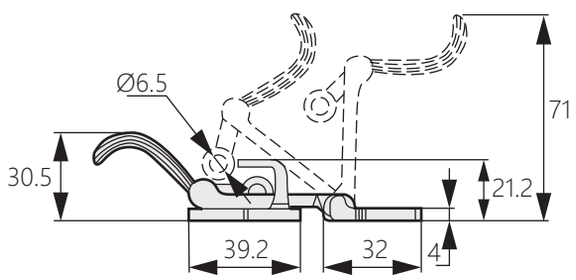

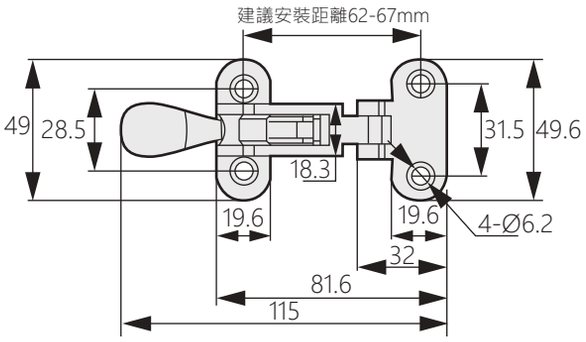

雙珠戶檔

Ball Catch

DK-2055



商品介紹:
- ■材質:不鏽鋼304脫臘鑄造
- ■表面處理:震盪研磨
- ■用途:環境設備、通信設備、船舶、車輛

Product description:
- ■Material: Stainless steel 304 dewaxing casting
- ■Surface treatment: Shock grinding
- ■Uses: Environmental equipment, communication equipment, ships, vehicles

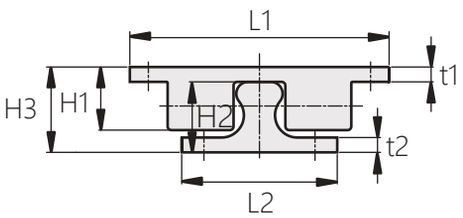

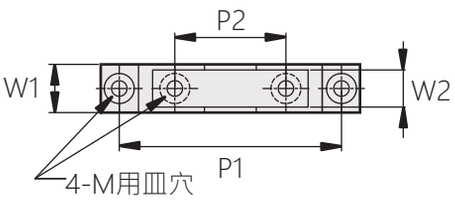

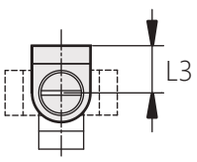

安裝示意圖

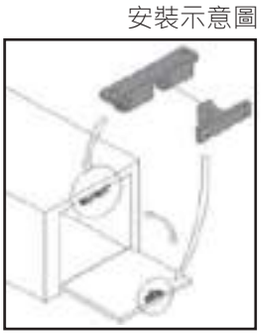

商品型號	L1	L2	L3	W1	W2	H1	H2	H3	t1	t2	P1	P2	M
DK-2055-1	70	42	10.5	13	10	17	19	23	4	4	60	30	M4
DK-2055-2	50	30	7	10	9	12	13	15.5	2.5	2.5	40	20	
DK-2055-3	43	25	6	8	7.5	10	11	13.5			35	16	M3

銅雙珠門擋

Ball Catch

DK-2053



商品介紹:
- ■簡易安裝
- ■材質:銅
- ■用途:機櫃、配分電盤、機械設備

Product description:
- ■Easy integration
- ■Material: Copper
- ■Uses: Communication Equipment, Control Panel, Cabinet Door, Machinery Equipment

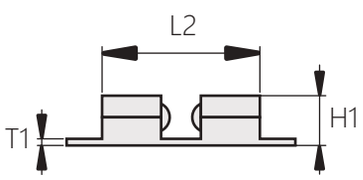

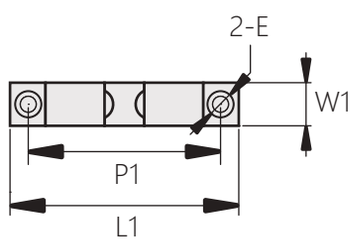

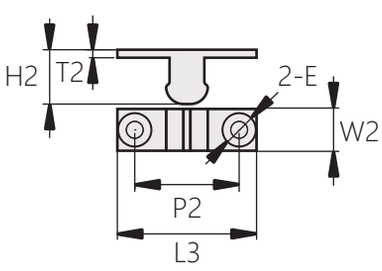

安裝示意圖

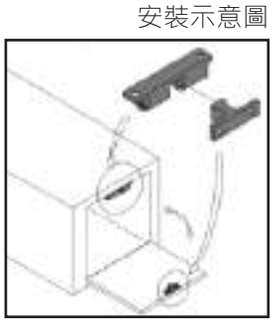

商品型號	L1	L2	L3	W1	W2	H1	H2	T1	T2	P1	P2	E	夾 持(KG)
DK-2053-1	40	24	24	7.6	6.8	10	10	1.8	2	32	15	3.4	1
DK-2053-2	44	27	26	8	6.8	10	10	2	2	35	15	3.4	1.5
DK-2053-3	49	31	29	9	7.8	10.8	10.8	2	2	40	19.7	3.8	2
DK-2053-4	60	36	35	11	9	13	13	2.2	2.2	50	24	4.6	2.5
DK-2053-5	69	47	40	13	11.5	15	15	2.2	2.2	58	30	4.8	5

鋁型材門阻搭扣

DK-044

Aluminum profile door stop buckle



商品介紹:
- ■材質:鐵
- ■表面處理:鍍鎳

Product description:
- ■Material: Iron
- ■Surface treatment: Nickel plating

[DK-044-1]

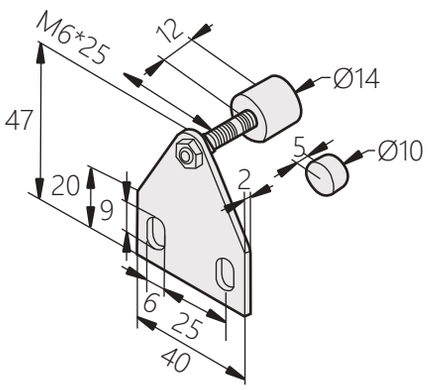

[DK-044-2]

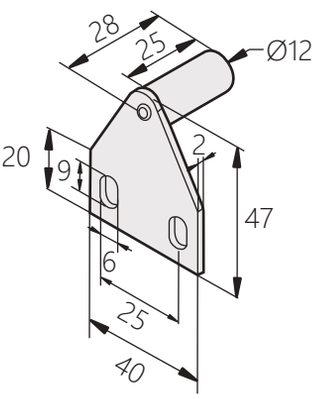

安裝示意圖

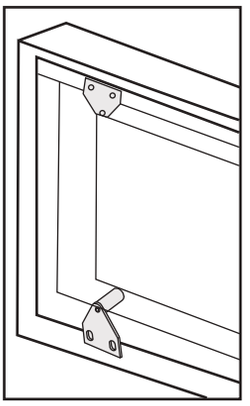

旋轉型拉動式搭扣

DK-156

Rotary Draw Latch



商品介紹:
- ■金屬結構，耐用的旋轉鎖舌設計與準確的拉動設置，能給予牢固的拉緊力以防止門板的意外開啟
- ■材質:鋼鐵、不鏽鋼 304
- ■表面處理:鐵 - 黑色塗裝、不鏽鋼 304- 震動研磨
- ■滑片伸縮距離:12 mm

Product description:
- ■All metal construction, a durable rotary cam design, and good pull-up specifications give a firm grip for consistent panel closure that resists accidental opening
- ■Material: Steel、Stainless Steel 304
- ■Surface treatment: Teel-Black Powder Coated ; Stainless Steel 304- Vibration Grind
- ■Slide Travels: 12 m/m

商品型號	材質
DK-156-1	不鏽鋼
DK-156-2	鐵

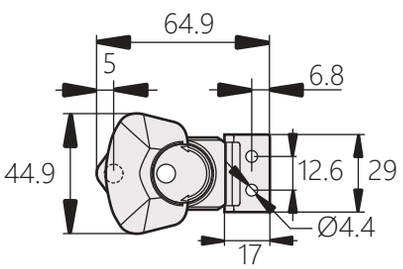

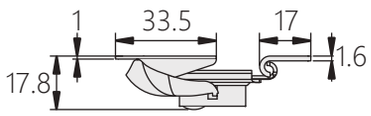

開孔尺寸

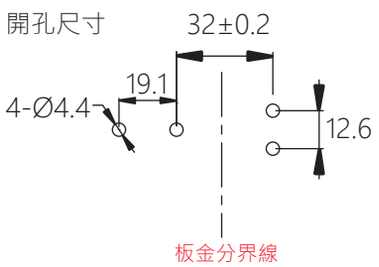

旋轉型拉動式搭扣 DK-2011

Rotary Draw Latch



商品介紹:

- 金屬結構，耐用的旋轉鎖舌設計與準確的拉動設置，能給予牢固的拉緊力以防止門板的意外開啟
- 材質:鋼鐵、不鏽鋼 304
- 表面處理:鐵 - 鍍鋅 ; 不鏽鋼 304- 震動研磨
- 滑片伸縮距離: 8 mm

Product description:

- All metal construction, a durable rotary cam design, and good pull-up specifications give a firm grip for c onsistent panel closure that resists accidental opening
- Material: Steel、Stainless Steel 304
- Surface treatment: Steel-Zinc Plated ; Stainless Steel
- Slide Travels: 8 mm

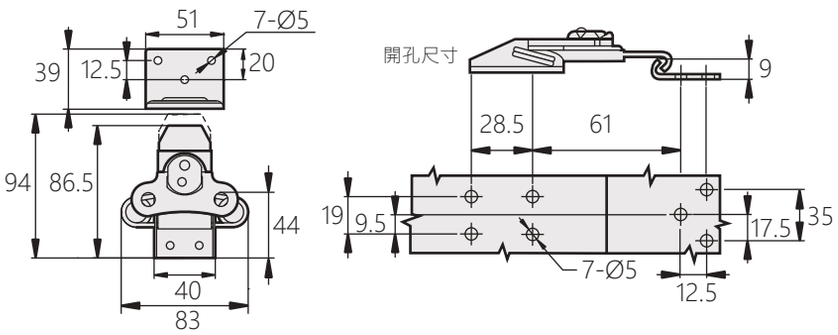

商品型號	規格
DK-2011-1	不鏽鋼
DK-2011-2	鐵

旋轉型拉動式搭扣 DK-180

Rotary Draw Latch



商品介紹:

- 金屬結構，耐用的旋轉鎖舌設計與準確的拉動設置，能給予牢固的拉緊力以防止門板的意外開啟
- 材質:鋼鐵、不鏽鋼 304
- 表面處理:鐵 - 鍍鋅 ; 不鏽鋼 304- 震動研磨
- 滑片伸縮距離: 8 mm

Product description:

- All metal construction, a durable rotary cam design, and good pull-up specifications give a firm grip for consistent panel closure that resists accidental opening
- Material: Steel、Stainless Steel 304
- Surface treatment: Steel-Zinc Plated ; Stainless Steel 304- Vibration Grind
- Slide Travels: 8mm

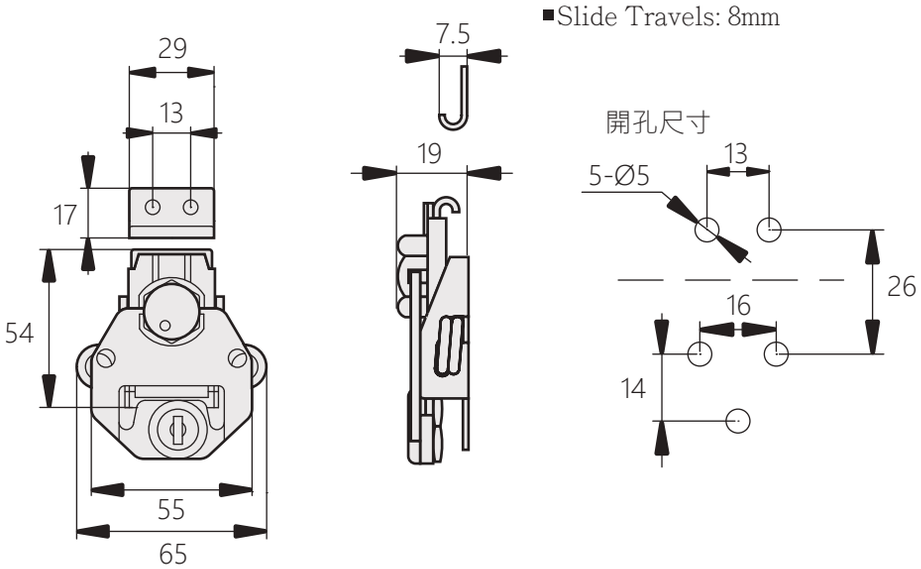

商品型號	規格
DK-180-1	不鏽鋼
DK-180-2	鐵

不鏽鋼蝴蝶搭扣

DK-8042

Stainless steel butterfly buckle



商品介紹:
- ■左右兼用型
- ■通過旋轉旋鈕來強力緊固
- ■體積小但扣緊力強
- ■材質:不鏽鋼(SUS304)
- ■表面處理:震動拋光
- ■用途:集裝箱、機床、電櫃、機械設備

Product description:
- ■Left and right
- ■Strongly tighten by turning the knob
- ■Small size but strong fastening
- ■Material: Stainless steel (SUS304)
- ■Surface treatment: Vibration polishing
- ■Uses: Container, machine tool, electric cabinet, mechanical equipment

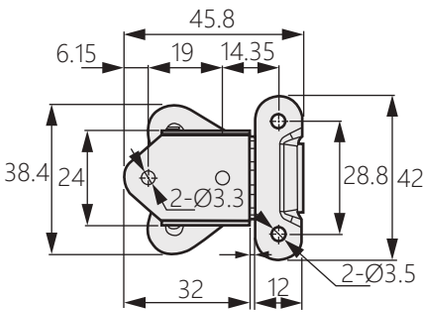

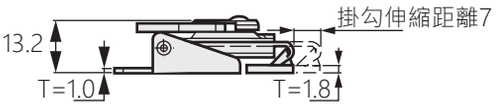

安裝示意圖

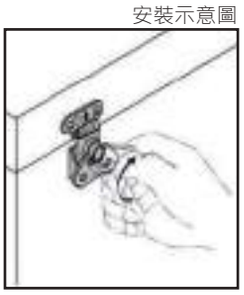

不鏽鋼蝴蝶搭扣

DK-159

Stainless steel butterfly buckle



商品介紹:
- ■通過旋轉旋鈕來強力緊固
- ■可加掛鎖，適合於振動設備上安裝
- ■旋轉手柄大，適合用力旋轉不費力
- ■材質:不鏽鋼SUS304
- ■表面處理:震動拋光
- ■用途:集裝箱、機床、電櫃、機械設備

Product description:
- ■Strongly tighten by turning the knob
- ■Padlock can be added for installation on vibration equipment
- ■Large rotating handle, suitable for hard rotation without effort
- ■Material: Stainless steel SUS304
- ■Surface treatment: Vibration polishing
- ■Uses: Container, machine tool, electric cabinet, mechanical equipment

安裝示意圖



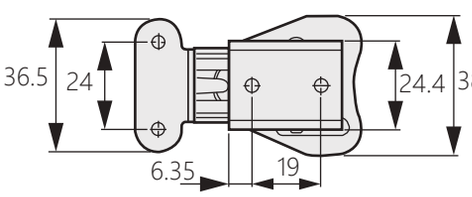

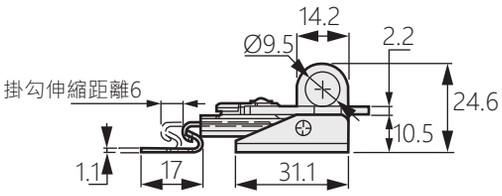

迫緊式搭扣

DK-050

Pressing buckle



商品介紹:

- 通過旋轉旋鈕來強力緊固
- 可加掛鎖，適合於振動設備上安裝
- 材質:鐵(SPPC)
- 表面處理:鍍鎳
- 用途:集裝箱、機床、電櫃、機械設備
- 備註:若箱體內壓力過大門可自行彈開

Product description:

- Strong tightening by turning the knob
- Can be padlocked, suitable for installation on vibration equipment.
- Material: Iron (SPPC)
- Surface treatment: Nickel plating
- Uses: Containers, machine tools, electrical cabinets, machinery and equipment

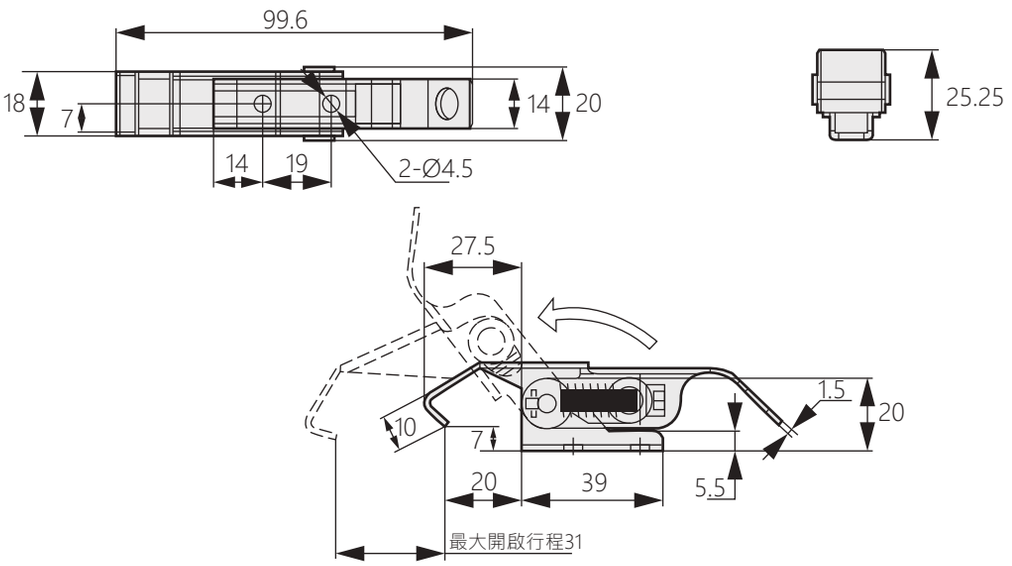

鐵平搭扣

DK-056

Iron flat buckle



商品介紹:

- 可安裝於側門或平門
- 內置彈簧結構，強力迫緊
- 材質:鐵
- 表面處理:鍍鉻
- 用途:櫃門、電箱、電櫃等

Product description:

- Can be mounted on side or flat doors
- Built-in spring structure, strong and tight
- Material: Iron
- Surface treatment: Chrome
- Uses: Cabinet door, electric box, electric cabinet, etc.

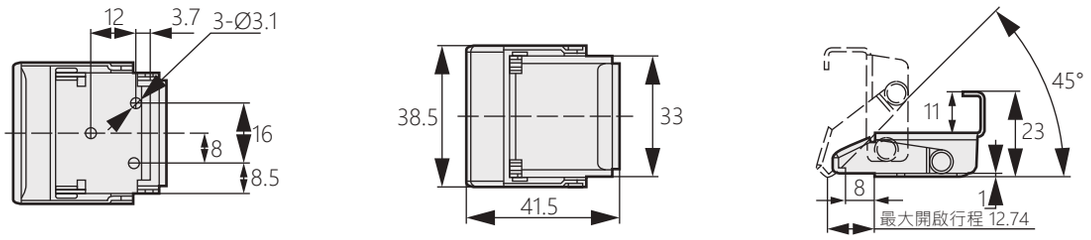

滾輪門碰

DK-8111

Roller door bump



商品介紹:
- ■具有強力迫緊功能
- ■用於凸門安裝
- ■材質:鋅合金
- ■表面處理:黑色烤漆、鍍亮鉻
- ■用途:烤箱、試驗設備、工業箱體
- ■備註:若箱體內壓力過大門可自行彈開

Product description:
- ■With strong pressing function
- ■For convex door installation
- ■Material: Zinc alloy
- ■Surface treatment: Black paint, Bright chrome plating
- ■Uses: Oven, test equipment, industrial cabinet
- ■Note: If the pressure inside the box is too large, the door can pop open by itself.

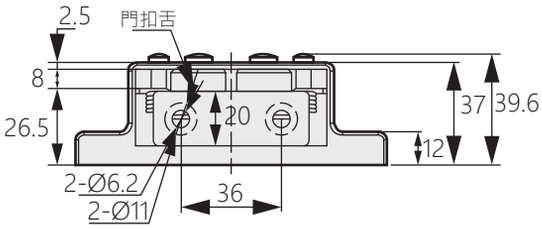

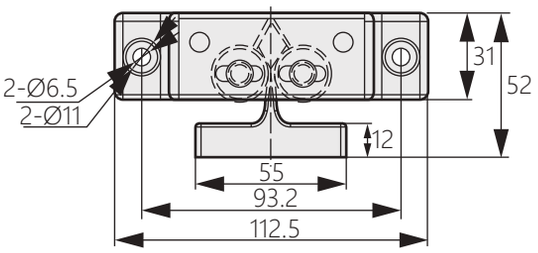

不鏽鋼平搭扣

DK-055

Stainless Steel Adjustable Series Clamp



商品介紹:
- ■可安裝於側門或平門
- ■帶螺紋調節扣，迫緊強度可調節
- ■材質:不鏽鋼 304
- ■材質:震動研磨
- ■用途:櫃門、電箱、電櫃等

Product description:
- ■Can be mounted on side or flat doors
- ■With thread adjustment buckle, adjustable tightening strength
- ■Material: Stainless steel 304
- ■Surface treatment: Vibration grinding
- ■Uses: Cabinet door, electric box, electric cabinet, mechanical equipment

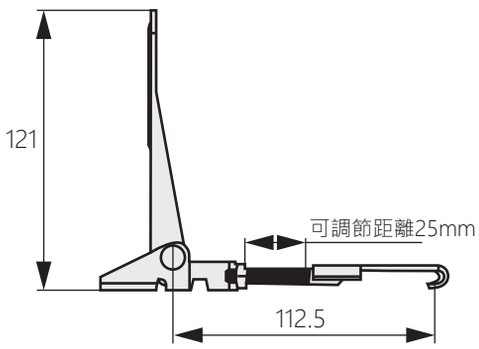

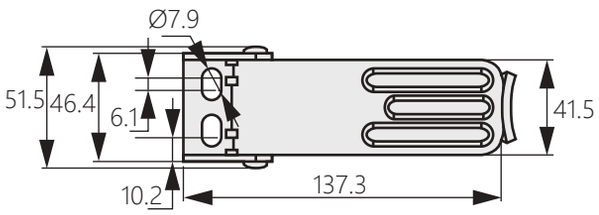

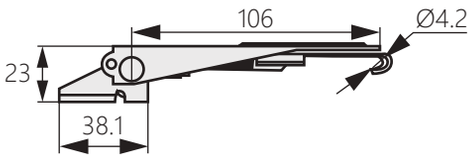

磁吸 DK-021

Magnet Catch



商品介紹:
- 具有強力吸力，內藏緩衝彈簧
- 材質:不鏽鋼 (SUS304)
- 表面處理:震動拋光
- 用途:分電盤、機床、自動化設備

Product description:
- With strong suction, built-in buffer spring
- Material: Stainless steel (SUS304)
- Surface treatment: Vibration polishing
- Uses: Distribution board, machine tool, automation equipment

【DK-021-1】

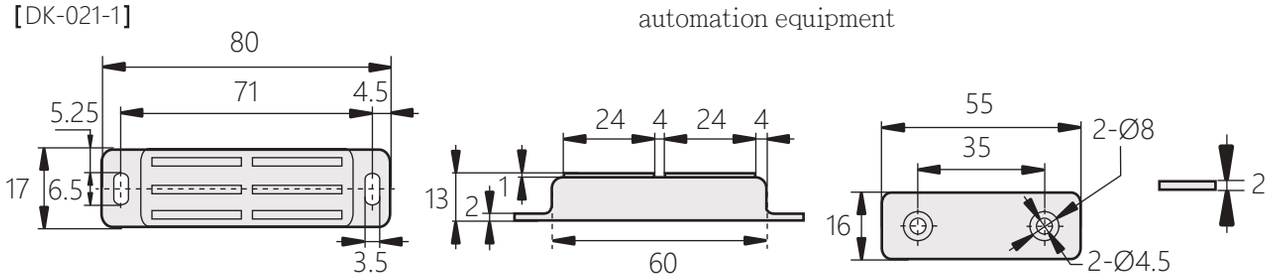

【DK-021-2】

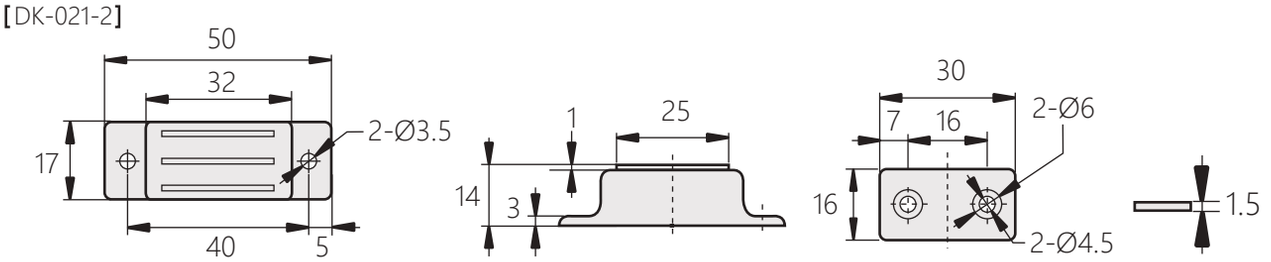

無塵門吸 DK-56-B

Magnetic catches



【DK-56-B-1】 【DK-56-B-2】

商品介紹:
- 磁體為密閉構造，不會產生粉塵
- 鎖扣板採用不鏽鋼鋼板（SUS430）
- 安裝孔為長孔，可進行安裝後的微調
- 圖面中不論A面或B面均可吸附
- 無塵室內的設備

Product description:
- The magnets are of airtightness structure so no dust or particles are entered
- The stainless steel plates(SUS430)are used for catches
- Installation holes are long so adjustments after installation can be made
- Will adhere to either surface A or surface B in the diagram
- Equipment inside the clean rooms

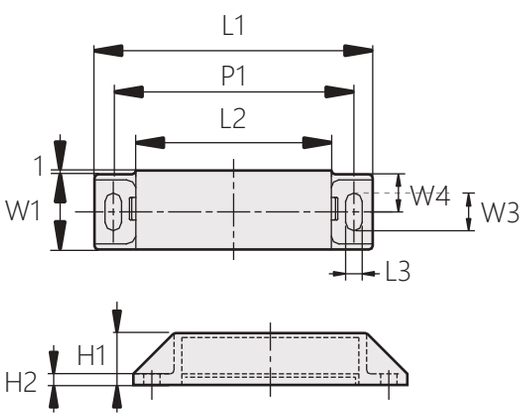

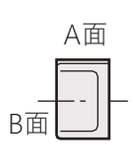

受板吸板

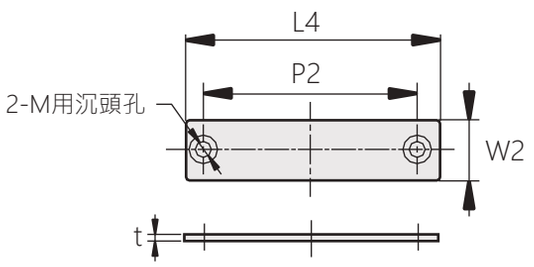

商品型號	L1	L2	L3	L4	W1	W2	W3	W4	t	H1	H2	P1	P2	M	吸附力N	
															A面	B面
DK-56-B-1	74	52	4.4	76	20	18	10	10	2	14	3	64	64	4	75±20%	50±20%
DK-56-B-2	48	28	4.4	50	20	15	10	10	1.5	11.3	3	38	38	3	14±20%	4.9±20%
DK-56-B-4	38	24	3.2	40	10	11	5.6	5	1.5	10	2	31	32	3	14±20%	4.9±20%

雙排磁吸

DK-200

Double row magnetic



商品介紹:
- 具有強力吸力
- 左右兼用，安裝方便
- 材質:塑膠和磁芯
- 表面處理:黑色
- 用途:分電盤、機床

Product description:
- Strong suction
- Easy to use both right and left
- Material: Plastic and magnetic core
- Surface treatment: Black
- Uses: Distribution board, machine tool

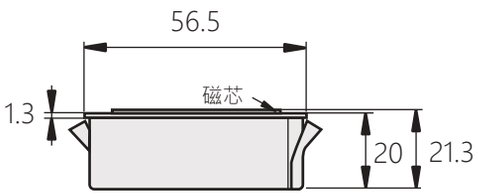

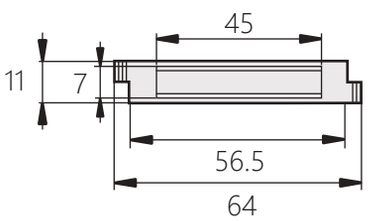

調節式搭扣

DK-124

Toggle Clamp



商品介紹:
- 安裝座子分兩部分可相對轉動，方便安裝
- 扣環帶螺紋可調節，以適應不同迫緊程度
- 體積小但迫緊性能強
- 材質:不鏽鋼、鐵(SPCC)
- 表面處理:震動研磨、鍍藍鋅
- 用途:櫃門、電箱、電櫃及工業設備

Product description:
- Installation base divided into two parts and relatively rotating, easy to install
- Adjustable latch rod with thread, suitable for different compression force
- Small size with strong tightly force
- Material: Stainless steel (SUS304), iron (SPCC)
- Surface treatment: Vibratory grinding, blue zinc plating
- Uses: Container door, electrical box, electrical cabinet, industrial equipment

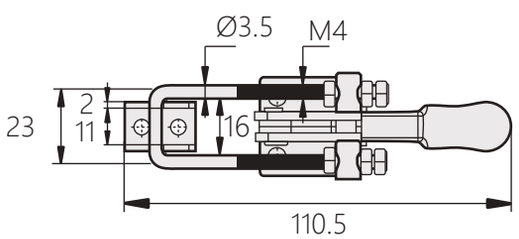

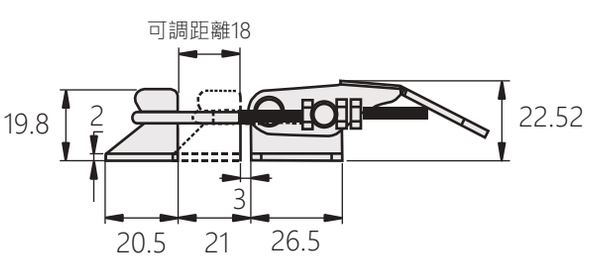

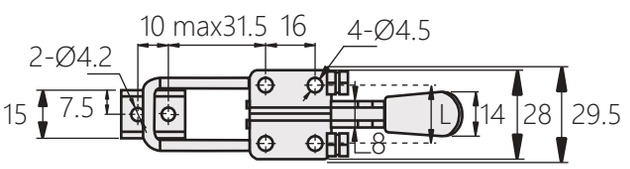

商品型號	規格	表面處理	L
DK-124-1	不鏽鋼	震動研磨	18.1
DK-124-2	鐵	鍍藍鋅	19.2

磁吸

Magnet Ctach

DK-022



商品介紹:

- 內建緩衝用彈簧
- 吸附力DK-022-1:68N,DK-022-2:39N
- 材質:磁鐵-鐵素體(異向性),外框-鋁合金板,
  磁吸板-冷軋鋼板
- 表面處理:鍍鎳
- 用途:分電盤、工具機

Product description:

- Built-in buffer spring
- Adsorption force DK-022-1: 68N,DK-022-2: 39N
- Material: magnet-ferrite (anisotropic),
  frame-aluminum alloy plate,
  Magnetic plate-cold rolled steel plate
- Surface treatment: Nickel plating
- Uses: Power distribution panel, machine tool

[DK-022-1]

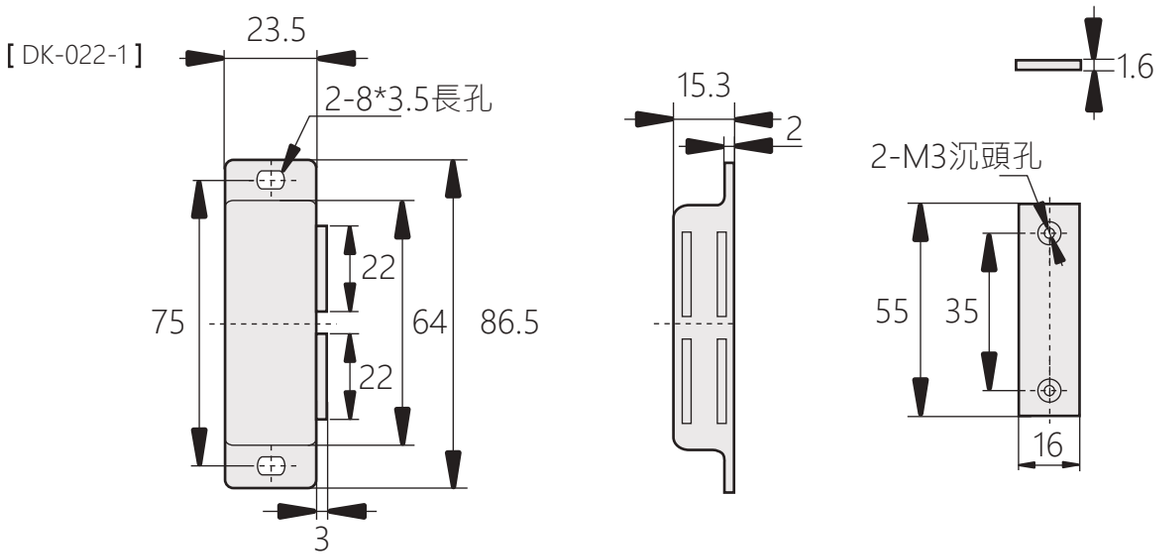

[DK-022-2]

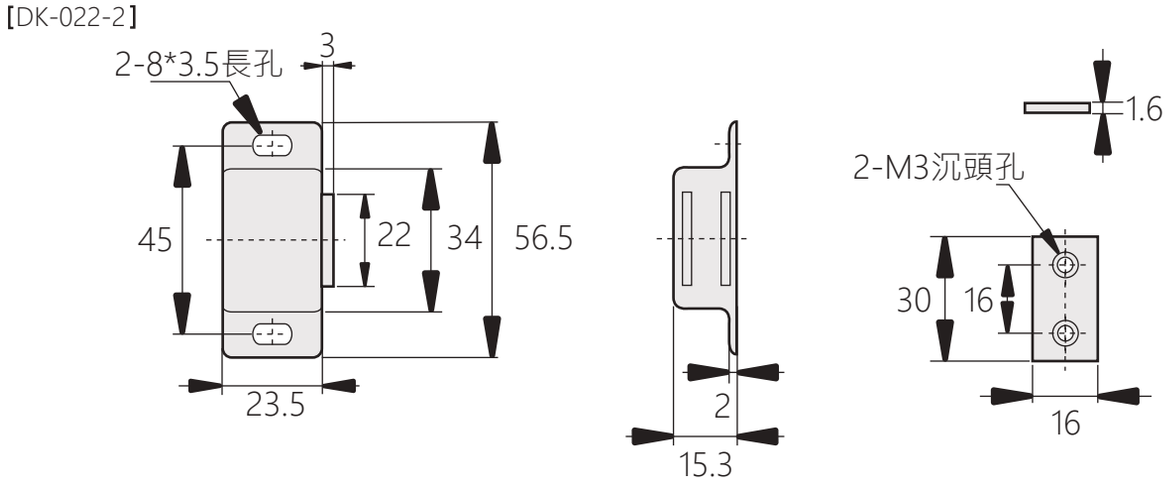

門扣快速夾鉗

Stainless Steel Adjustable Toggle Clamp

DK-151

[DK-151-1-1]
[DK-151-2-1]

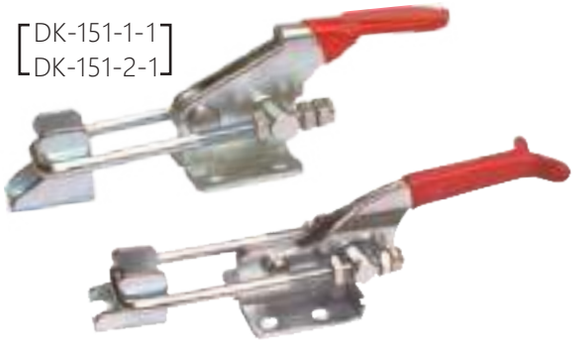

[DK-151-1-2]
[DK-151-2-2]



[DK-151-1-4]
[DK-151-2-4]

商品介紹:

- 體積小，安裝方便
- 可調節型全金屬夾鉗，適用於工作負載大以及需要大幅度調整間距的情況
- 材質:不鏽鋼 304,鐵
- 表面處理:鐵-電鍍白鋅
- 用途:櫃門、電箱、電櫃、機械設備

Product description:

- Small size and easy installation
- Adjustable all-metal clamp for large workloads and large Adjust the spacing
- Material: Stainless steel 304, Iron
- Surface treatment: Iron-Electroplated white zinc
- Uses: Cabinet door, electric box, electric cabinet, mechanical equipment

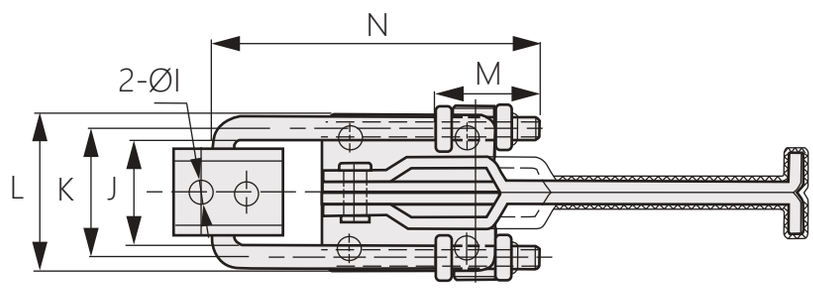

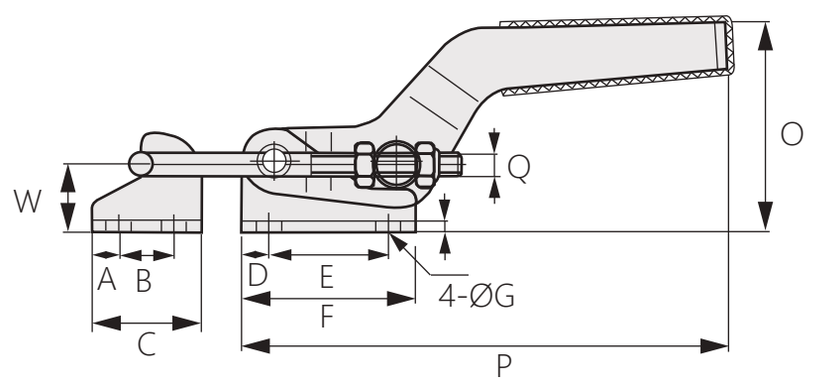

商品型號		A	B	C	D	E	F	G	H	I
不鏽鋼	鐵									
DK-151-1-1	DK-151-2-1	5	10	20	5.2	15.9	26.2	4.4	2	4.4
DK-151-1-2	DK-151-2-2	6.8	12	25.4	6.4	19	39.7	6.7	3	6.3
DK-151-1-4	DK-151-2-4	9.5	19.2	38.1	9.5	41.3	60.3	8.6	4	8.5

商品型號		J	K	L	M	N	O	P	Q	W	拉力 (KG)
不鏽鋼	鐵										
DK-151-1-1	DK-151-2-1	19	19	28.2	24	58-85	29.3	75	M4P=0.7	12	163
DK-151-1-2	DK-151-2-2	31.6	27	44.4	38	90-260	41.3	123.7	M5P=1	12.2	318
DK-151-1-4	DK-151-2-4	38.1	44.5	54	52	115-450	74	168.5	M8P=1.25	23.2	900

不鏽鋼垂直式快速夾鉗 DK-152

Stainless Steel Adjustable Toggle Clamp (Vertical Type)



商品介紹:

- 體積小，安裝方便
- 可調節型全金屬夾鉗，適用於工作負載大以及需要大幅度調整間距的情況
- 材質:不鏽鋼 304
- 最大夾持力:225 公斤
- 用途:櫃門、電箱、電櫃、機械設備

Product description:

- Small size and easy installation
- Adjustable all-metal clamp for large workloads and large Adjust the spacing
- Material: Stainless steel 304
- Maximum clamping force: 225 kg
- Uses: Cabinet door, electric box, electric cabinet, mechanical equipment

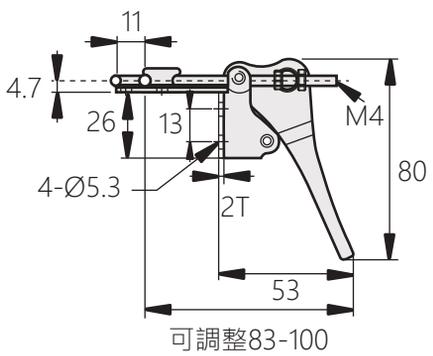

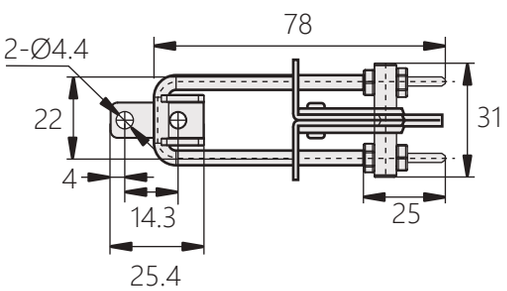

安裝示意圖



不鏽鋼調整型夾鉗(鉤型) DK-153

Stainless Steel Adjustable Series Clamp



商品介紹:

- 體積小，安裝方便
- 可調節型全金屬夾鉗，適用於工作負載大以及需要大幅度調整間距的情況
- 材質:不鏽鋼 304
- 用途:櫃門、電箱、電櫃、機械設備

Product description:

- Small size and easy installation
- Adjustable all-metal clamp for large workloads and large Adjust the spacing
- Material: Stainless steel 304
- Uses: Cabinet door, electric box, electric cabinet, mechanical equipment

安裝示意圖



[DK-153-1]

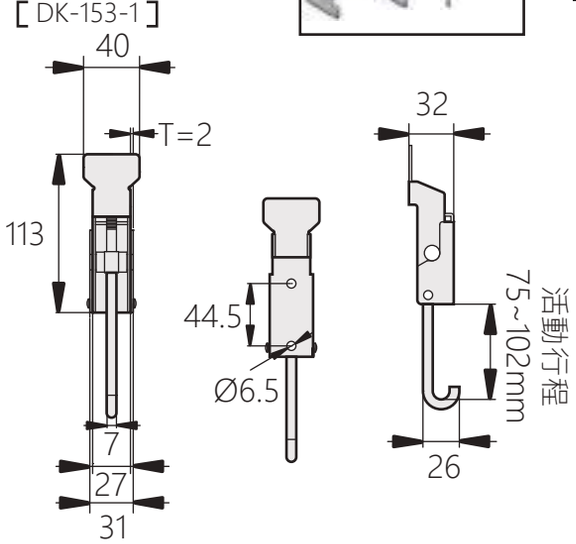

[DK-153-2]

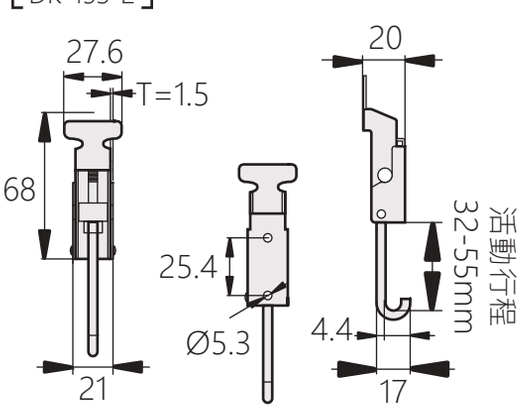

水平式快速夾鉗

Horizontal quick clamp

DK-225



[DK-225-1-1]
[DK-225-1-2]



[DK-225-2]

商品介紹:

- ■夾持力:227Kg
- ■壓把開啟角度:90°
- ■手柄開啟角度:65°
- ■材質:高碳鋼,不鏽鋼
- ■備註:DK-225-1空心壓背、法蘭底座
  DK-225-2空心壓背、直底座

Product description:

- ■Gripping force: 227Kg
- ■Opening angle of handle: 90 °
- ■Handle opening angle: 65 °
- ■Material: High carbon steel, stainless steel
- ■Note: DK-225-1 hollow back, flange base
  DK-225-2 hollow pressure back, straight base

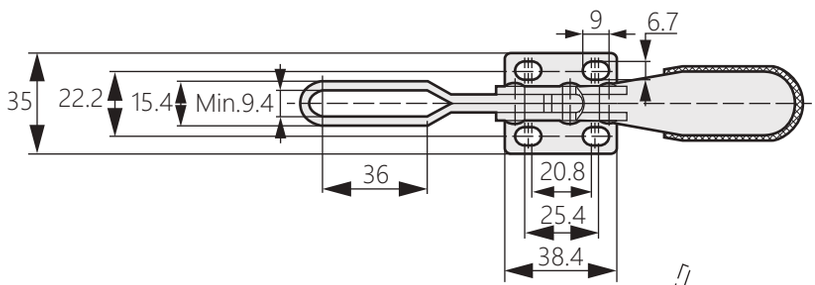

[DK-225-1-1]
[DK-225-1-2]

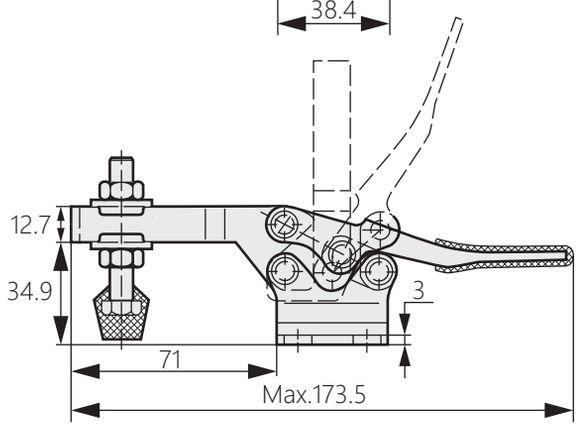

商品型號	材質
DK-225-1-1	不鏽鋼
DK-225-1-2	高碳鋼
DK-225-2	高碳鋼

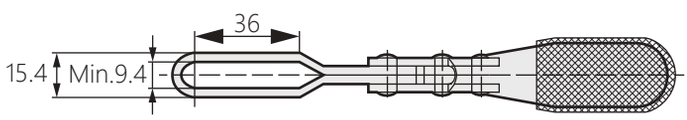

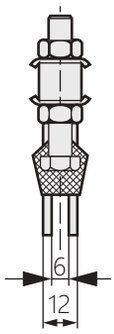

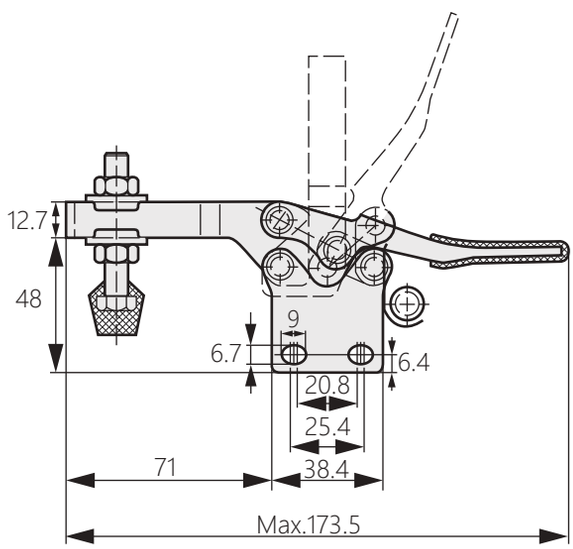

[DK-225-2]

水平快速夾

DK-8019-6

Horizontal quick clip



商品介紹:

- ■壓把開啟角度90度，手柄開啟角度80度
- ■手柄部分包膠，方便操作
- ■材質:鐵(SPCC)
- ■表面處理:鍍白鋅
- ■夾持力: 265kg
- ■用途:櫃門、電箱、電櫃及工業設備
- ■備註:左右兼用型

Product description:

- ■Opening angle of the handle 90 degrees, handle opening angle of 80 degrees.
- ■The handle part is covered with plastic for easy operation.
- ■Material: Iron (SPCC)
- ■Surface treatment: White zinc plating
- ■Gripping force: 265kg
- ■Uses: Cabinet doors, electrical boxes, electrical cabinets and industrial equipment.
- ■Note: Left and right

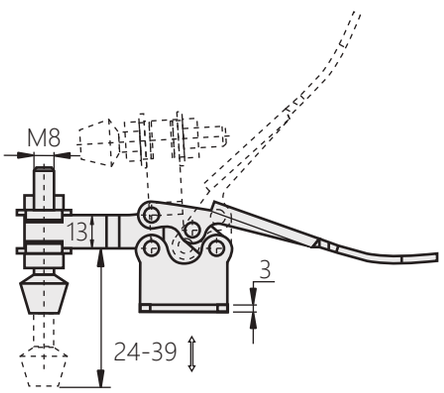

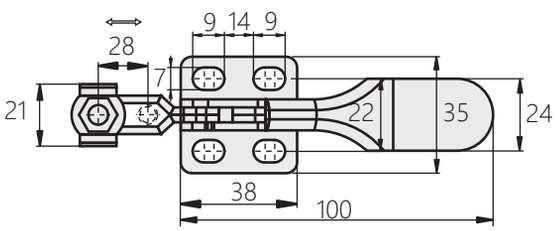

水平式快速夾

DK-126

Horizontal quick clip



商品介紹:

- ■安裝座子分兩部分可相對轉動，方便安裝
- ■迫緊點高度可調節，以適應門板門框的不同高度
- ■體積小但迫緊性能強
- ■材質:不鏽鋼 304、鐵（SPCC）
- ■用途:櫃門、電箱、電櫃及工業設備

Product description:

- ■The mounting seat can be rotated in two parts for easy installation.
- ■The height of the pressing point can be adjusted to suit the different heights of the door panel.
- ■Small size but strong pressing performance.
- ■Material: Stainless steel 304,iron (SPCC)
- ■Uses: Cabinet door, electric box, electric cabinet and industrial equipment.

商品型號	材質
DK-126-1	不鏽鋼
DK-126-2	鐵

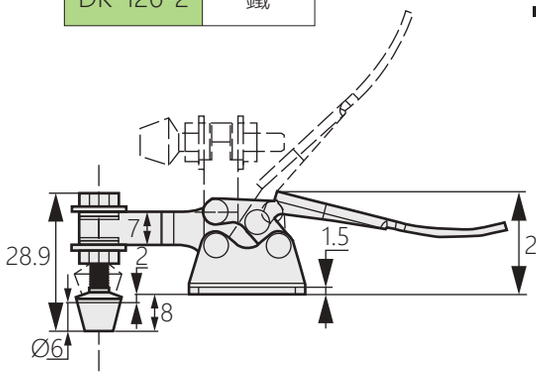

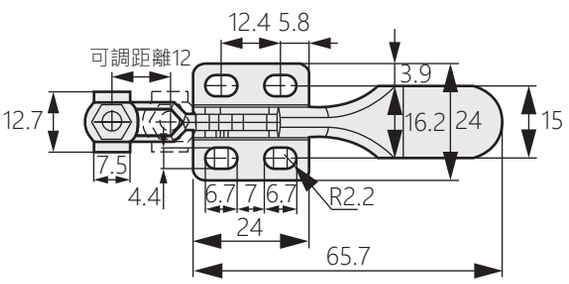

水平快速夾

DK-127

Horizontal quick clip



商品介紹:

- ■迫緊點高度可調節，以適應門板門框的不同高度
- ■壓把開啟角度90度，手柄開啟角度80度
- ■材質:鐵(SPCC)
- ■表面處理:鍍白鋅
- ■用途:櫃門、電箱、電櫃及工業設備

Product description:

- ■The height of the pressing point can be adjusted to suit the different heights of the door panel.
- ■Opening angle of the handle 90 degrees, handle opening angle of 80 degrees.
- ■Material: Iron (SPCC)
- ■Surface treatment: White zinc plating
- ■Uses: Cabinet doors, electrical boxes, electrical cabinets and industrial equipment.

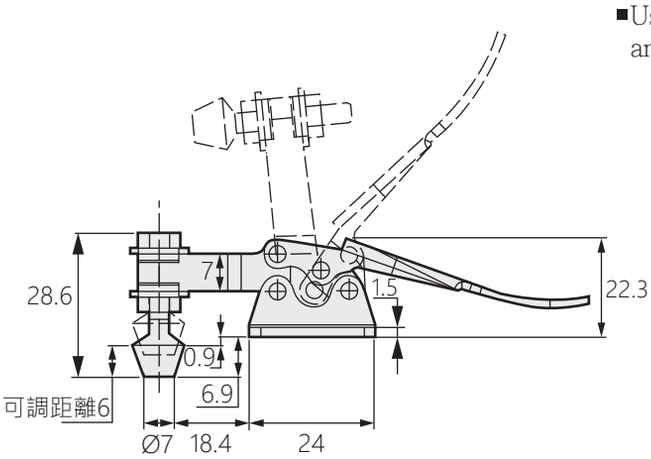

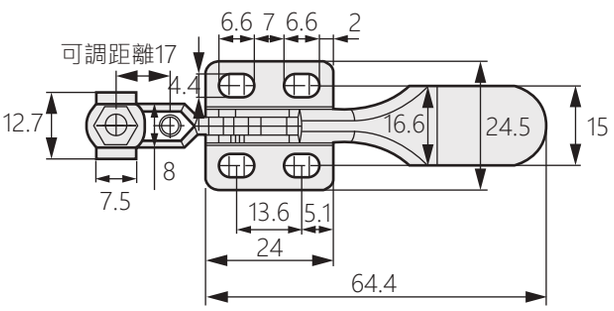

水平式快速夾

DK-128

Horizontal quick clip



商品介紹:

- ■壓把開啟角度90度，手柄開啟角度80度
- ■迫緊點高度可調節，以適應門板門框的不同高度
- ■手柄部分包膠，方便操作
- ■材質:鐵（SPCC）
- ■表面處理:鍍白鋅
- ■用途:櫃門、電箱、電櫃及工業設備

Product description:

- ■The height of the pressing point can be adjusted to suit the different heights of the door panel.
- ■Opening angle of the handle 90 degrees, handle opening angle of 80 degrees.
- ■The handle part is covered with plastic for easy operation.
- ■Material: Iron (SPCC)
- ■Uses: Cabinet door, electric box, electric cabinet and industrial equipment.

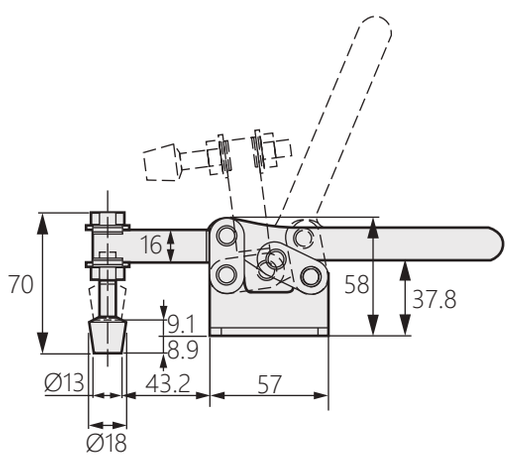

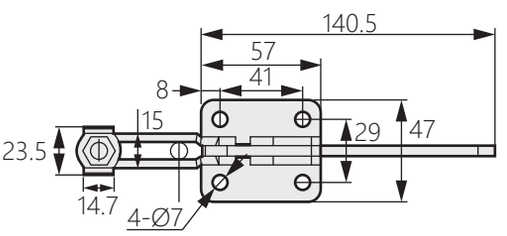

水平快速夾

DK-129

Horizontal quick clip



商品介紹:

- 迫緊點高度可調節，以適應門板門框的不同高度
- 壓把開啟角度90度，手柄開啟角度80度
- 材質:鐵(SPCC)
- 表面處理:鍍白鋅
- 用途:櫃門、電箱、電櫃及工業設備

Product description:

- The height of the pressing point can be adjusted to suit the different heights of the door panel.
- Opening angle of the handle 90 degrees, handle opening angle of 80 degrees.
- Material: Iron (SPCC)
- Surface treatment: White zinc plating
- Uses: Cabinet doors, electrical boxes, electrical cabinets and industrial equipment.

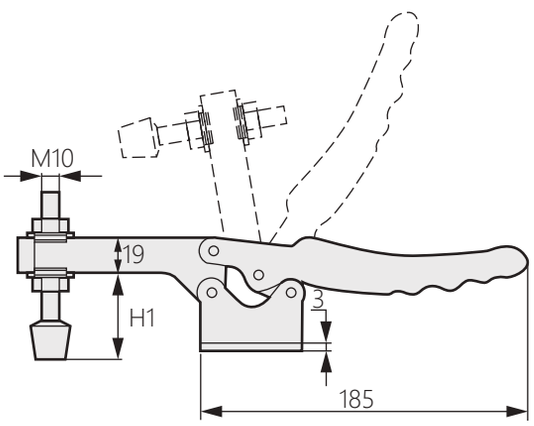

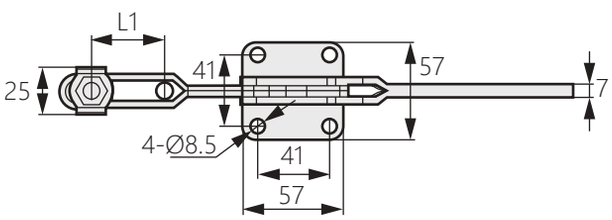

垂直式快速夾

DK-8020H-1

Vertical quick clip



商品介紹:

- 迫緊點高度可調節，以適應門板門框的不同高度
- 壓把開啟角度100度，手柄開啟角度60度
- 手柄部分包膠，方便操作
- 材質:鐵（SPCC）
- 表面處理:鍍藍鋅
- 用途:工業治具、箱體以及工業設備

Product description:

- The height of the pressing point can be adjusted to suit the different heights of the door panel
- The opening angle of the handle is 100 degrees, and the opening angle of the handle is 60 degrees.
- The handle part is covered with plastic for easy operation
- Material: Iron (SPCC)
- Surface treatment: Blue zinc plating
- Uses: Cabinet door, electric box, electric cabinet and industrial equipment.

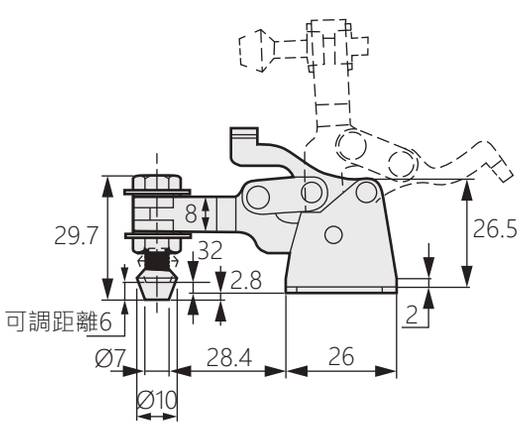

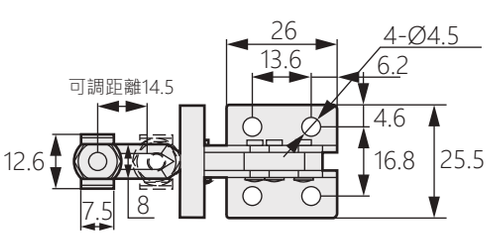

垂直式快速夾 DK-8020H-2

Vertical quick clip



商品介紹:

- 迫緊點高度可調節，以適應門板門框的不同高度
- 壓把開啟角度100度，手柄開啟角度60度
- 材質:鐵(SPCC)
- 表面處理:鍍藍鋅
- 用途:工業治具、箱體以及工業設備

Product description:

- The height of the pressing point can be adjusted to suit the different heights of the door panel.
- The opening angle of the handle is 100 degrees, and the opening angle of the handle is 60 degrees.
- Material: Iron (SPCC)
- Surface treatment: Blue zinc plating
- Uses: Industrial fixtures, cabinets and industrial equipment

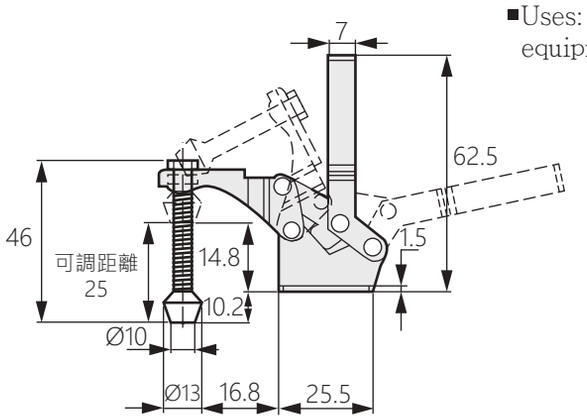

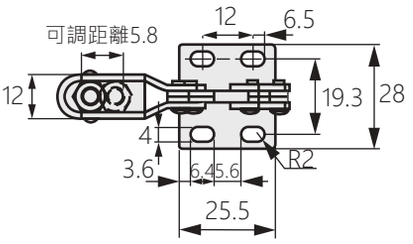

垂直式快速夾 DK-8020H-3

Vertical quick clip



商品介紹:

- 迫緊點高度可調節，以適應門板門框的不同高度
- 壓把開啟角度100度，手柄開啟角度60度
- 手柄部分包膠，方便操作
- 材質:鐵（SPCC）
- 表面處理:鍍藍鋅
- 用途:工業治具、箱體以及工業設備
- 備註:底座安裝面與迫緊面平行

Product description:

- The height of the pressing point can be adjusted to suit the different heights of the door panel
- The opening angle of the handle is 100 degrees, and the opening angle of the handle is 60 degrees.
- The handle part is covered with plastic for easy operation
- Material: Iron (SPCC)
- Surface treatment: Blue zinc plating
- Uses: Industrial fixtures, cabinets and industrial equipment.
- Note: The mounting surface of the base is parallel to the pressing surface.

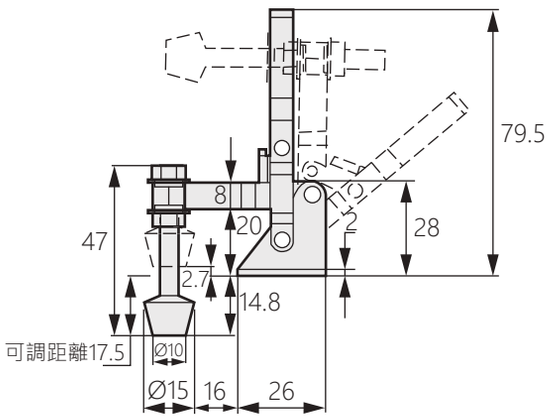

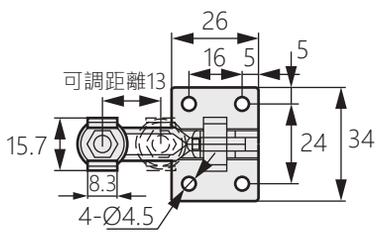

垂直式快速夾

DK-8020H-4

Vertical quick clip



商品介紹:

- 迫緊點高度可調節，以適應門板門框的不同高度
- 壓把開啟角度100度，手柄開啟角度60度
- 材質:鐵(SPCC)
- 表面處理:鍍藍鋅
- 用途:工業治具、箱體以及工業設備
- 備註:底座安裝面與迫緊面平行

Product description:

- The height of the pressing point can be adjusted to suit the different heights of the door panel.
- The opening angle of the handle is 100 degrees, and the opening angle of the handle is 60 degrees.
- Material: Iron (SPCC)
- Surface treatment: Blue zinc plating
- Uses: Industrial fixtures, cabinets and industrial equipment
- Note: The mounting surface of the base is parallel to the pressing surface.

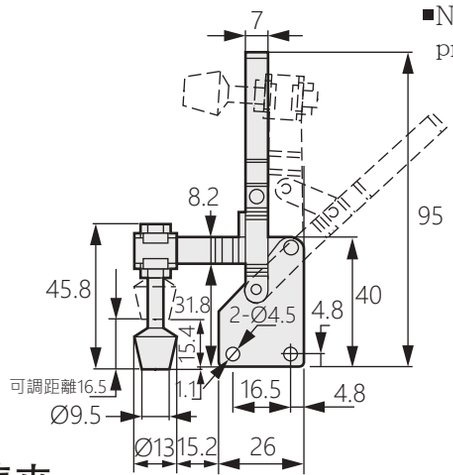

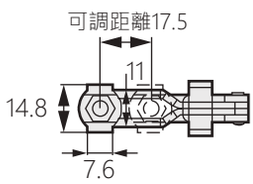

垂直式快速夾

DK-8020H-7

Vertical quick clip



商品介紹:

- 迫緊點高度可調節，以適應門板門框的不同高度
- 壓把開啟角度100度，手柄開啟角度60度
- 手柄部分包膠，方便操作
- 材質:鐵（SPCC）
- 表面處理:鍍藍鋅
- 用途:工業治具、箱體以及工業設備
- 備註:底座安裝面與迫緊面平行

Product description:

- The height of the pressing point can be adjusted to suit the different heights of the door panel
- The opening angle of the handle is 100 degrees, and the opening angle of the handle is 60 degrees.
- The handle part is covered with plastic for easy operation
- Material: Iron (SPCC)
- Surface treatment: Blue zinc plating
- Uses: Industrial fixtures, cabinets and industrial equipment.
- Note: The mounting surface of the base is parallel to the pressing surface.

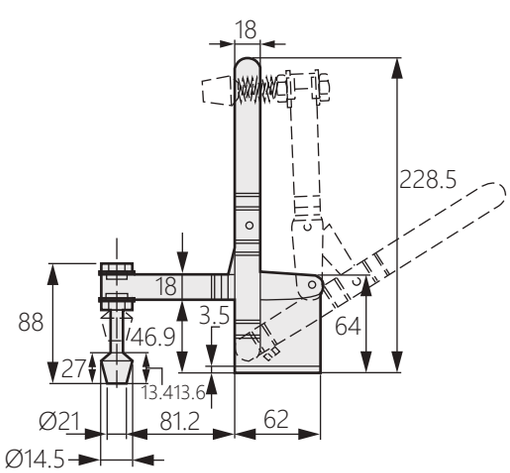

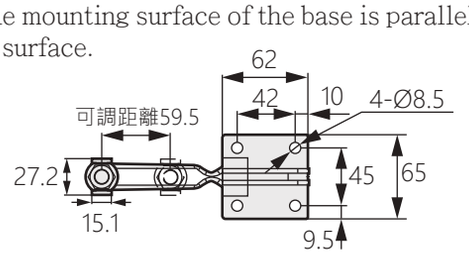

垂直式快速夾

Vertical quick clip

DK-8020H-5



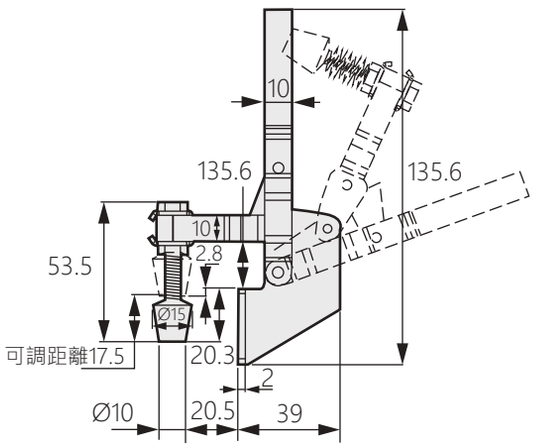

商品介紹:

- 迫緊點高度可調節，以適應門板門框的不同高度
- 壓把開啟角度100度，手柄開啟角度60度
- 材質:鐵(SPCC)
- 表面處理:鍍藍鋅
- 用途:工業治具、箱體以及工業設備
- 備註:底座安裝面與迫緊面平行

Product description:

- The height of the pressing point can be adjusted to suit the different heights of the door panel.
- The opening angle of the handle is 100 degrees, and the opening angle of the handle is 60 degrees.
- Material: Iron (SPCC)
- Surface treatment: Blue zinc plating
- Uses: Industrial fixtures, cabinets and industrial equipment.
- Note: The mounting surface of the base is parallel to the pressing surface.

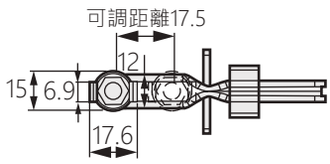

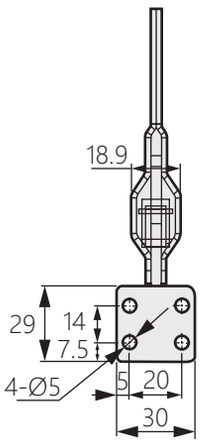

垂直式快速夾

Vertical quick clip

DK-8020H-8



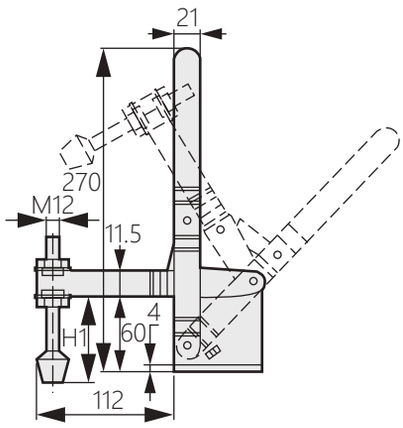

商品介紹:

- 迫緊點高度可調節，以適應門板門框的不同高度
- 壓把開啟角度100度，手柄開啟角度60度
- 材質:鐵（SPCC）
- 表面處理:鍍藍鋅
- 用途:工業治具、箱體以及工業設備
- 備註:底座安裝面與迫緊面平行

Product description:

- The height of the pressing point can be adjusted to suit the different heights of the door panel
- The opening angle of the handle is 100 degrees, and the opening angle of the handle is 60 degrees.
- Material: Iron (SPCC)
- Surface treatment: Blue zinc plating
- Uses: Industrial fixtures, cabinets and industrial equipment.
- Note: The mounting surface of the base is parallel to the pressing surface.

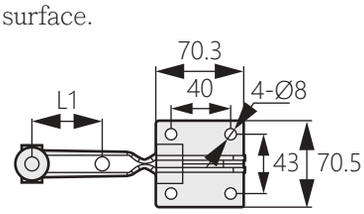

垂直式快速夾

DK-8020H-10

Vertical quick clip



商品介紹:

- 迫緊點高度可調節，以適應門板門框的不同高度
- 壓把開啟角度100度，手柄開啟角度60度
- 材質:鐵(SPCC)
- 表面處理:鍍藍鋅
- 用途:工業治具、箱體以及工業設備
- 備註:底座安裝面與迫緊面平行

Product description:

- The height of the pressing point can be adjusted to suit the different heights of the door panel.
- The opening angle of the handle is 100 degrees, and the opening angle of the handle is 60 degrees.
- Material: Iron (SPCC)
- Surface treatment: Blue zinc plating
- Uses: Industrial fixtures, cabinets and industrial equipment
- Note: The mounting surface of the base is parallel to the pressing surface.

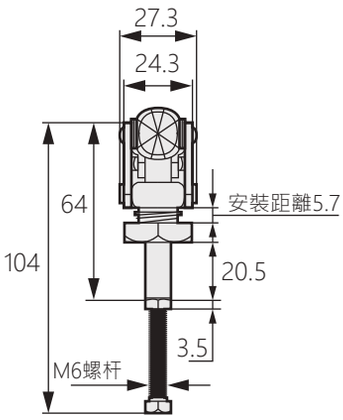

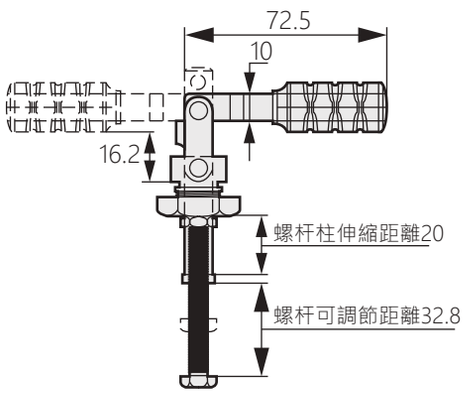



開孔尺寸

水平式快速夾

DK-8021Z-1

Horizontal quick clip



商品介紹:

- 迫緊點為螺紋調節，可調節其長度
- 手柄開啟角度190度，迫緊點的調節量為10mm
- 材質:鐵（SPCC）
- 表面處理:鍍藍鋅
- 用途:工業治具、箱體以及工業設備

Product description:

- Tightening point is thread adjustment, its length can be adjusted.
- Handle opening angle of 190 degrees, the adjustment amount of the pressing point is 10mm.
- Material: Iron (SPCC)
- Surface treatment: Blue zinc plating
- Uses: Industrial fixtures, cabinets and industrial equipment.

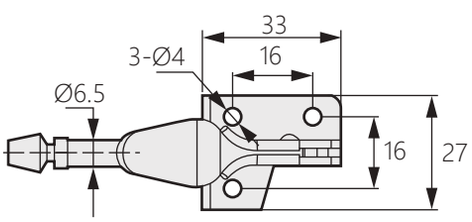

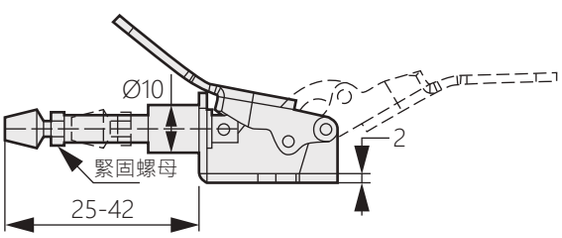

垂直式快速夾

DK-8020H-11

Vertical quick clip



商品介紹:

- 迫緊點高度可調節，以適應門板門框的不同高度
- 壓把開啟角度100度，手柄開啟角度60度
- 材質:鐵(SPCC)
- 表面處理:鍍藍鋅
- 用途:工業治具、箱體以及工業設備
- 備註:底座安裝面與迫緊面平行

Product description:

- The height of the pressing point can be adjusted to suit the different heights of the door panel.
- The opening angle of the handle is 100 degrees, and the opening angle of the handle is 60 degrees.
- Material: Iron (SPCC)
- Surface treatment: Blue zinc plating
- Uses: Industrial fixtures, cabinets and industrial equipment
- Note: The mounting surface of the base is parallel to the pressing surface.

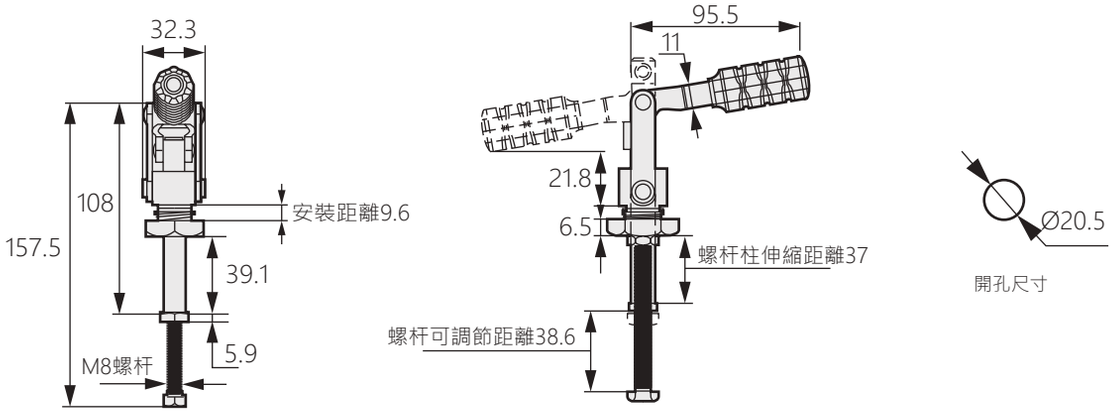

水平式快速夾

DK-8021Z-2

Horizontal quick clip



商品介紹:

- 夾持力45kg
- 手柄開啟角度190度，迫緊點的調節量為10mm
- 材質:鐵（SPCC）
- 表面處理:鍍藍鋅
- 用途:工業治具、箱體以及工業設備

Product description:

- Clamping force 45kg
- Handle opening angle of 190 degrees, the adjustment amount of the pressing point is 10mm.
- Material: Iron (SPCC)
- Surface treatment: Blue zinc plating
- Uses: Industrial fixtures, cabinets and industrial equipment.

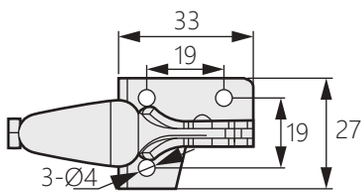

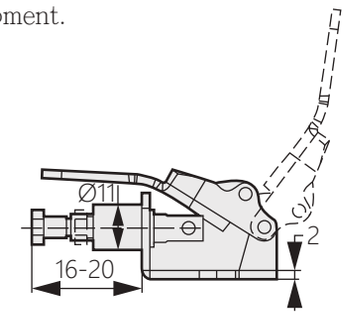

垂直式快速夾

DK-8020H-12

Vertical quick clip



商品介紹:

- 迫緊點高度可調節，以適應門板門框的不同高度
- 手柄開啟角度150度
- 材質:鐵(SPCC)
- 表面處理:鍍藍鋅
- 用途:工業治具、箱體以及工業設備

Product description:

- The height of the pressing point can be adjusted to suit the different heights of the door panel.
- Handle opening angle: 150 degrees
- Material: Iron (SPCC)
- Surface treatment: Blue zinc plating
- Uses: Industrial fixtures, cabinets and industrial equipment

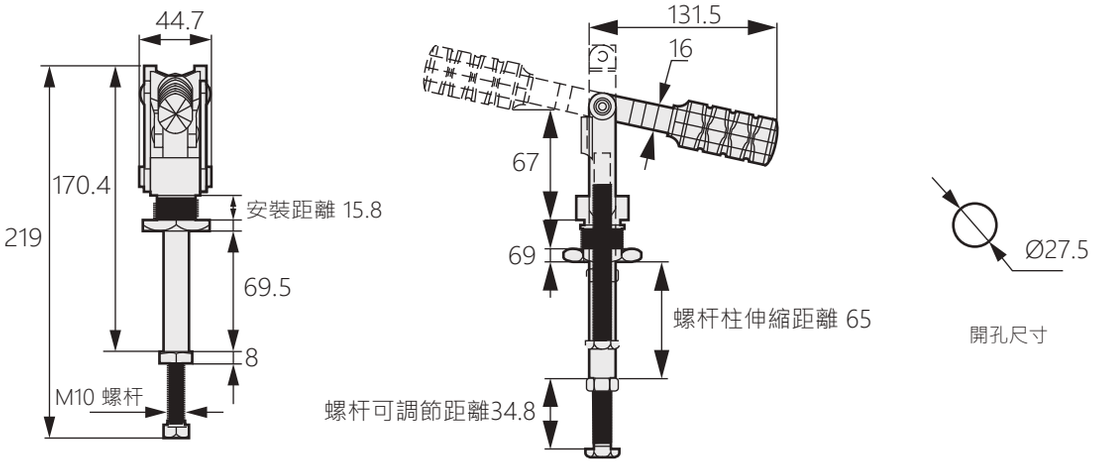

水平式快速夾

DK-8021Z-3

Horizontal quick clip



商品介紹:

- 迫緊點為螺紋調節，可調節其長度
- 手柄開啟角度190度，迫緊點的調節量為10mm
- 材質:鐵（SPCC）
- 表面處理:鍍藍鋅
- 用途:工業治具、箱體以及工業設備

Product description:

- The height of the pressing point can be adjusted to suit the different heights of the door panel
- The opening angle of the handle is 100 degrees, and the opening angle of the handle is 60 degrees.
- Material: Iron (SPCC)
- Surface treatment: Blue zinc plating
- Uses: Industrial fixtures, cabinets and industrial equipment.

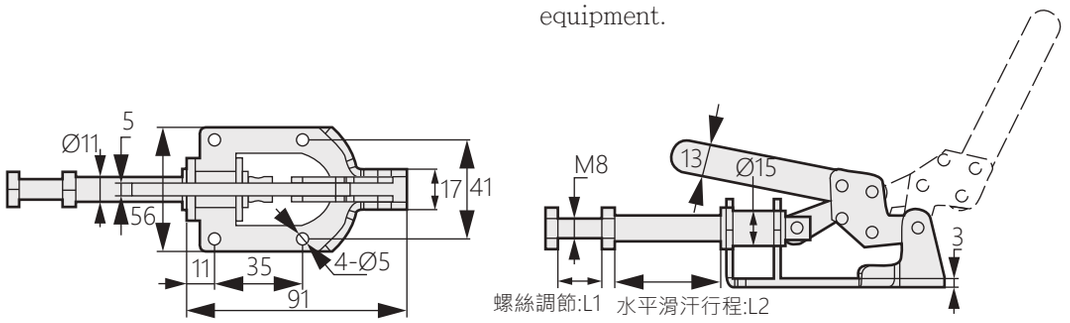

普通插梢

DK-1005

Ordinary cutting



商品介紹:

- ■最大靜載荷:80KG
- ■材質:不鏽鋼304
- ■表面處理:拋光,拉絲
- ■用途:箱櫃,廚具,車輛,船舶,酒店設備,機械等。(帶彈簧)

Product description:

- ■MAX Load weight: 80kg
- ■Material: Stainless Steel 304
- ■Surface treatment: Poloshing,drawbench
- ■Uses: Kitchen Equipment ,Cabinet,Vehicle, Vessel,Hotel Facilities,Machinery,etc.(Spring)

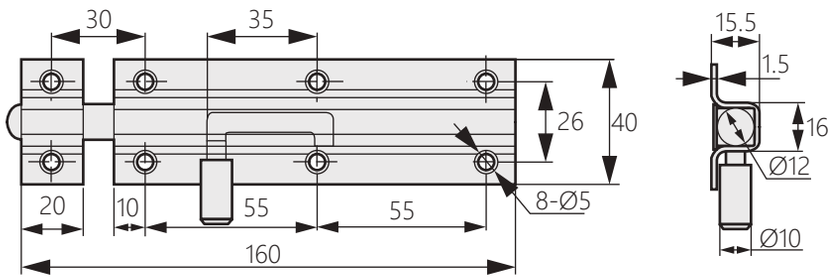

水平式快速夾

DK-8021Z-4

Horizontal quick clip



商品介紹:

- ■迫緊點為螺紋調節，可調節其長度
- ■手柄開啟角度190度，迫緊點的調節量為10mm
- ■夾持力385kg
- ■材質:鐵(SPCC)
- ■表面處理:鍍藍鋅
- ■用途:工業治具、箱體以及工業設備

Product description:

- ■Tightening point is thread adjustment, its length can be adjusted
- ■Handle opening angle of 190 degrees, the adjustment amount of the pressing point is 10mm
- ■Clamping force 386kg
- ■Material: Iron (SPCC)
- ■Surface treatment: Blue zinc plating
- ■Uses: Industrial fixtures, cabinets and industrial equipment

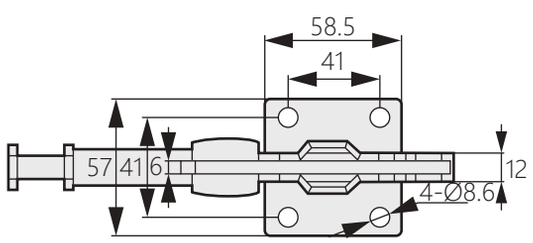

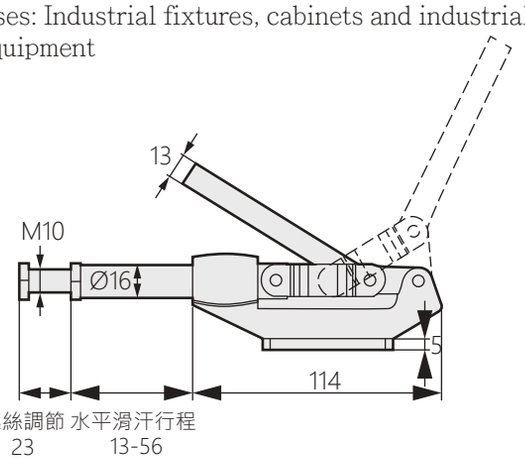

門口式快速夾

DK-8022

Door quick clip



DK-8022-1

DK-8022-2

DK-8022-3

商品介紹:

- ■扣環長度可調節，以適應不同扣緊距離
- ■材質:鐵(SPCC)
- ■表面處理:鍍藍鋅
- ■用途:工業治具、箱體以及工業設備
- ■備註:底座安裝面與扣座安裝面可平行或垂直

Product description:

- ■Adjustable buckle length to accommodate different fastening distances.
- ■Material: Iron (SPCC)
- ■Surface treatment: Blue zinc plating
- ■Uses: Industrial fixtures, cabinets and industrial equipment
- ■Note: The mounting surface of the base and the mounting surface of the buckle can be parallel or vertical.

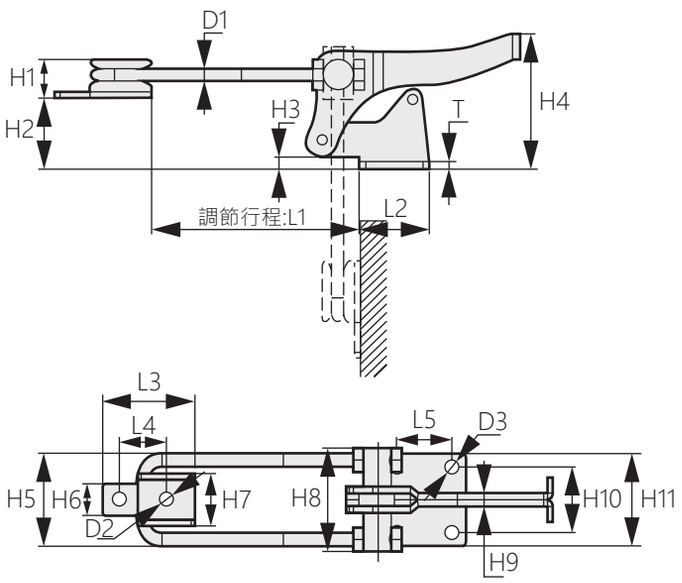

水平安裝

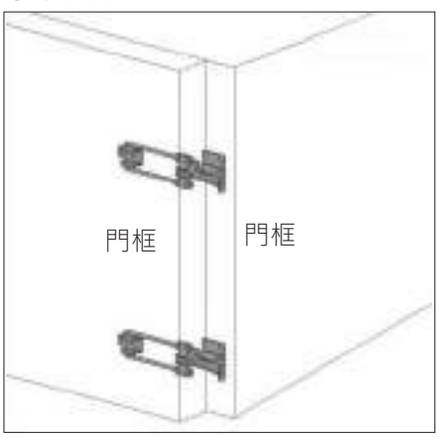

垂直安裝



商品型號	L1	L2	L3	L4	L5	H1	H2	H3	H4	H5	H6	H7	H8	H9	H10	H11	D1	D2	D3	T
DK-8022-1	32-58.5	26	25	14	13	9.5	24	5	54	23	9.5	14	30	4	22	35	3.5	4.5	5	5
DK-8022-2	61-79.5	34	38	20	19	15.5	30	6.5	63	32	14	20	40	6	25	40	5	7	7	3
DK-8022-3	88-106	48	54	27	32	22	37	8	79	53	19	30	60	7	38	54	7	8	8	4

雙扣
Clips

DK-1012



商品介紹:
- ■外觀平滑不傷手，極佳美觀表面
- ■材質:不鏽鋼(SUS304)、鐵
- ■表面處理: 鐵-鍍鋅
- ■用途:配電盤、電控箱

Product description:
- ■Smooth appearance without hurting hands
- ■Material: Stainless steel (SUS304), Iron
- ■Surface treatment: Iron-Zinc plating
- ■Uses: Distribution, electrical controlbox and machine

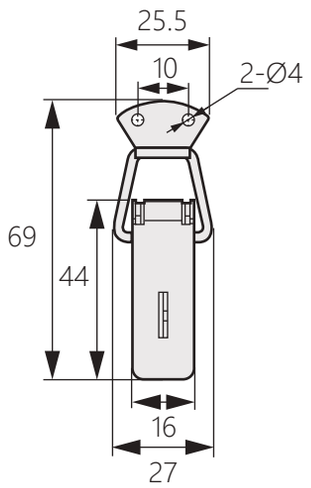

[DK-1012-1-1]

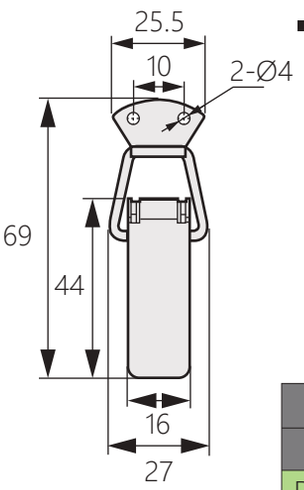

[DK-1012-1-2]

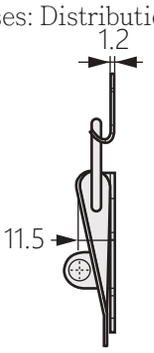

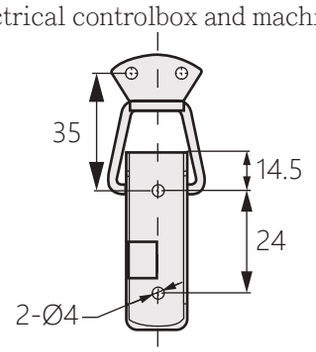

商品型號		規格	L1	L2	W
不鏽鋼	鐵				
DK-1012-1-1	DK-1012-2-1	有鎖	24	14.5	27
DK-1012-1-2	DK-1012-2-2	無鎖	23	10.5	22

不鏽鋼垂直式夾鉗
Stainless Steel Vertical Type Toggle Clamp

DK-150



商品介紹:
- ■體積小，安裝方便
- ■可調節型全金屬夾鉗，適用於工作負載大以及需要大幅度調整間距的情況
- ■表面處理:震動研磨
- ■材質:不鏽鋼 304
- ■最大夾持力:95 公斤
- ■用途:櫃門、電箱、電櫃、機械設備

Product description:
- ■Small size and easy installation
- ■Adjustable all-metal clamp for large workloads and large Adjust the spacing
- ■Surface treatment: Vibration grinding
- ■Material: Stainless steel 304
- ■Maximum clamping force: 95 kg
- ■Uses: Cabinet door, electric box, electric cabinet, mechanical equipment

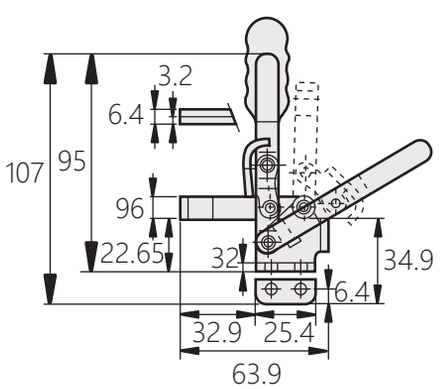

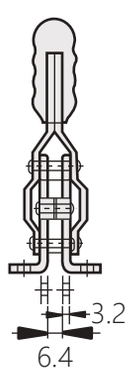

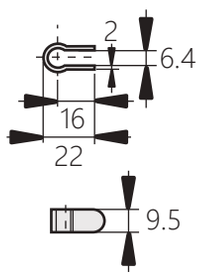

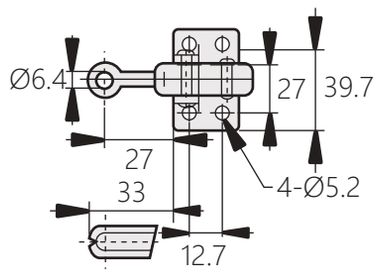

普通插梢

DK-1002

Ordinary cutting



商品介紹:

- ■最大靜載荷:80KG
- ■材質:不鏽鋼304
- ■表面處理:拋光,拉絲
- ■用途:箱櫃,廚具,車輛,船舶,酒店設備,機械等。(帶彈簧)

Product description:

- ■MAX Load weight: 80kg
- ■Material: Stainless Steel 304
- ■Surface treatment: Poloshing,drawbench
- ■Uses: Kitchen Equipment ,Cabinet,Vehicle, Vessel,Hotel Facilities,Machinery,etc.(Spring)

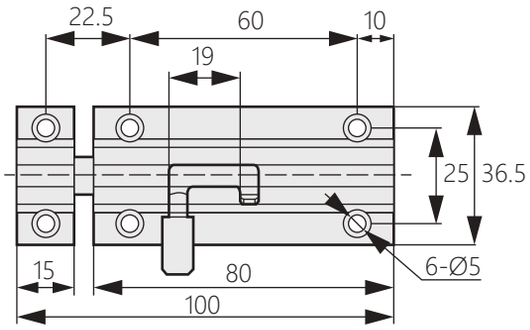

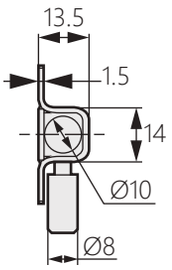

普通插梢

DK-1003

Ordinary cutting



商品介紹:

- ■最大靜載荷:80KG
- ■材質:不鏽鋼304
- ■表面處理:拋光,拉絲
- ■用途:箱櫃,廚具,車輛,船舶,酒店設備,機械等

Product description:

- ■MAX Load weight: 80kg
- ■Material: Stainless Steel 304
- ■Surface treatment: Poloshing,drawbench
- ■Uses: Kitchen equipment ,cabinet,vehicle, vessel,hotel facilities,machinery,etc.

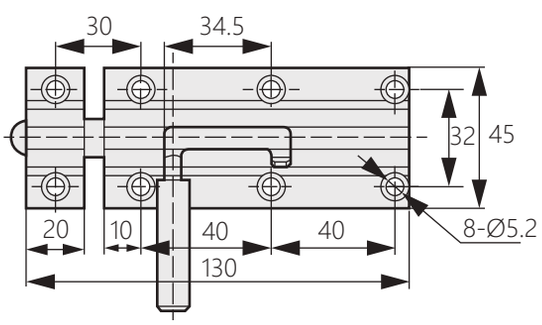

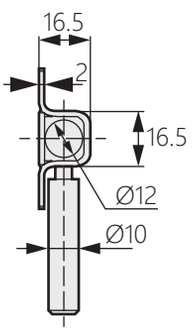

不鏽鋼插銷

Stainless Steel Bolt

DK-004



[DK-004-1]　　[DK-004-2]

商品介紹:
- 左右兼用，安裝方便
- 具有強力回彈開啟功能
- 帶鎖定按鈕裝置
- 材質:不鏽鋼(SUS201)
- 表面處理:拉絲拋光
- 用途:烤箱設備、試驗箱、機櫃等

Product description:
- Easy to use both right and left
- With strong rebound opening function
- With locking button device
- Material: Stainless steel (SUS201)
- Surface treatment: Brushed polishing
- Uses: Oven equipment, test boxe, cabinet

商品型號	L1	L2
DK-004-1	100	85
DK-004-2	75	60

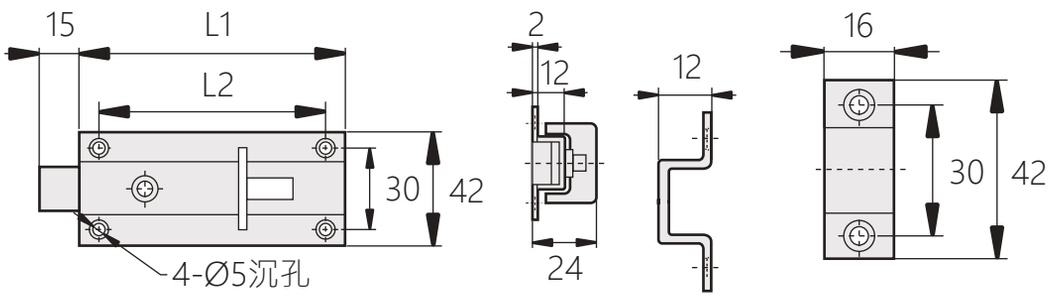

不鏽鋼插銷

Stainless Steel Bolt

DK-005



[DK-005-1]　　[DK-005-2]

商品介紹:
- 左右兼用，安裝方便
- 材質:不鏽鋼(SUS201)
- 表面處理:震動拋光
- 用途:自動化設備、數控設備

Product description:
- Easy to use both right and left
- Material: Stainless steel (SUS201)
- Surface treatment: Vibration polishing
- Uses: Automation equipment, CNC equipment

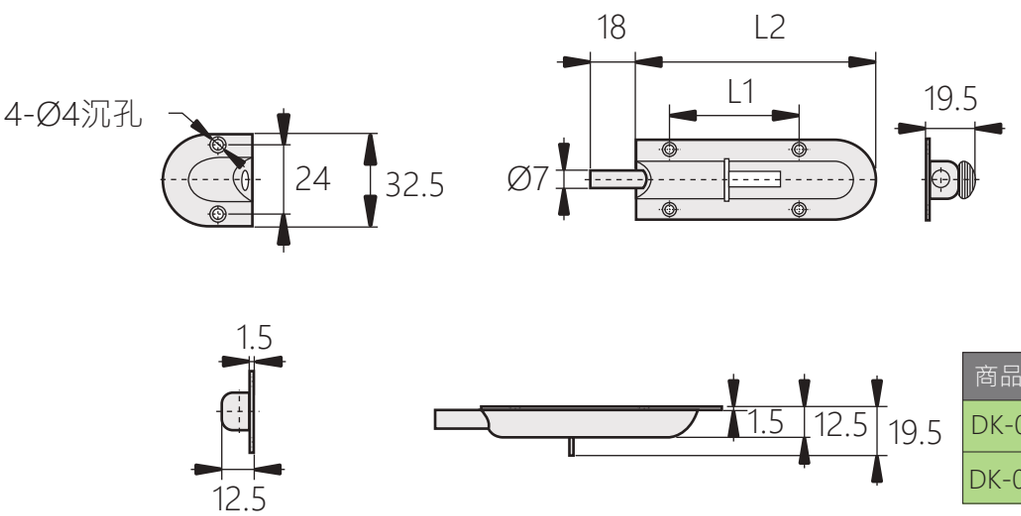

商品型號	L1	L2
DK-005-1	40	55
DK-005-2	52	67

普通插梢

DK-1009

Ordinary cutting



商品介紹:
- ■最大靜載荷:50KG
- ■材質:不鏽鋼304
- ■表面處理:拋光,拉絲
- ■用途:箱櫃,廚具,車輛,船舶,酒店設備,機械等
- ■備註:此為訂製品

Product description:
- ■MAX Load weight: 50kg
- ■Material: Stainless Steel 304
- ■Surface treatment: Poloshing,drawbench
- ■Uses: Kitchen equipment ,cabinet,vehicle, vessel,hotel facilities,machinery,etc.
- ■Note: This is an order product

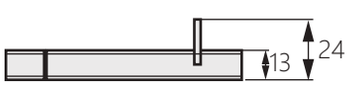

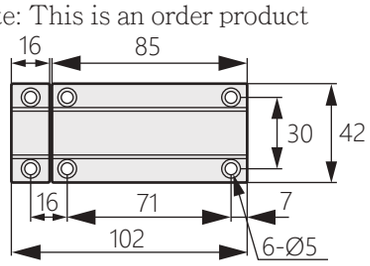

普通插梢

DK-1006

Ordinary cutting



商品介紹:
- ■最大靜載荷:50KG
- ■材質:不鏽鋼304
- ■表面處理:拋光,拉絲
- ■用途:箱櫃,廚具,車輛,船舶,酒店設備,機械等

Product description:
- ■MAX Load weight: 50kg
- ■Material: Stainless Steel 304
- ■Surface treatment: Poloshing,drawbench
- ■Uses: Kitchen equipment ,cabinet,vehicle, vessel,hotel facilities,machinery,etc.

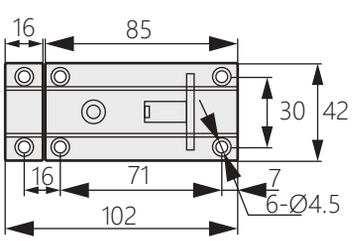

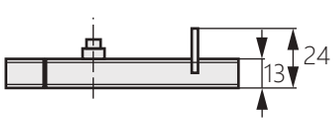

不鏽鋼按壓式門閂

DK-101

Stainless steel push-on buckle



商品介紹:
- ■上鎖和開鎖均可單觸動操作
- ■材質:不鏽鋼 304
- ■表面處理:震動研磨

Product description:
- ■Both lock and unlock can be operated by one touch
- ■Material: Stainless steel 304
- ■Surface treatment: Vibration grind

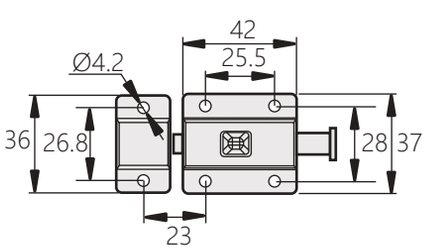

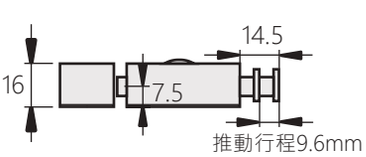

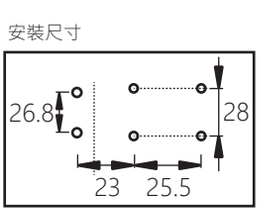

普通插梢

DK-1007

Ordinary cutting



商品介紹:

- ■最大靜載荷:80KG
- ■材質:不鏽鋼304
- ■表面處理:拋光,拉絲
- ■用途:箱櫃,廚具,車輛,船舶,酒店設備,機械等。

Product description:

- ■MAX Load weight:80kg
- ■Material: Stainless Steel 304
- ■Surface treatment: Poloshing,drawbench
- ■Uses: Kitchen equipment ,cabinet,vehicle, vessel,hotel facilities,machinery,etc.

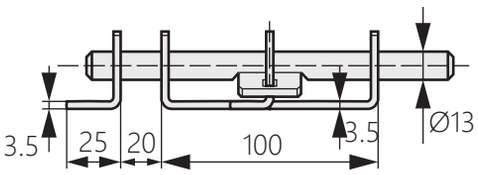

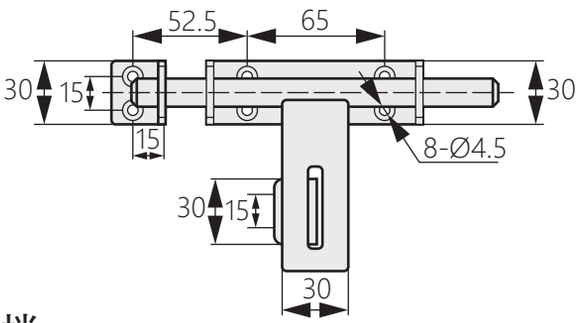

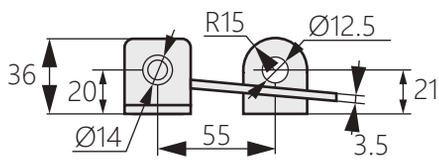

普通插梢

DK-1008

Ordinary cutting

商品介紹:

- ■最大靜載荷:80KG
- ■材質:不鏽鋼304
- ■表面處理:拋光,拉絲
- ■用途:箱櫃,廚具,車輛,船舶,酒店設備,機械等



Product description:

- ■MAX Load weight: 80kg
- ■Material: Stainless Steel 304
- ■Surface treatment: Poloshing,drawbench
- ■Uses: Kitchen equipment ,cabinet,vehicle, vessel,hotel facilities,machinery,etc.

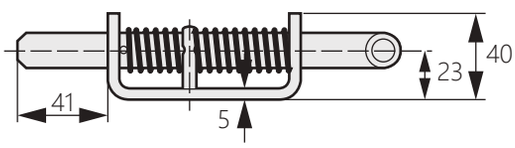

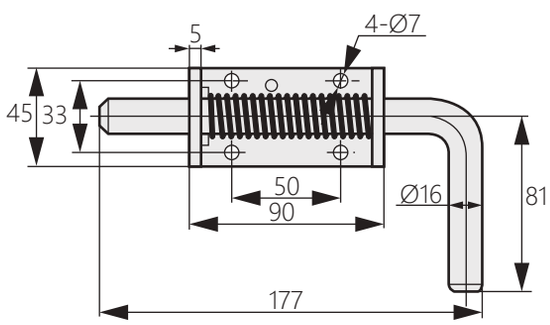

隱藏式門扣

HS-P-4

Right and left pressing door lock



商品介紹:

- 門內安裝，迫緊部分不暴露在門外
- 安裝在門側邊有箱體的門框上，即平門安裝
- 表面處理:鍍黑鋅
- 材質:鐵、塑膠
- 用途:烤箱、試驗箱及密封性要求好的箱體

Product description:

- Installed inside the door, the pressing part is not exposed outside the door
- Installed on the door frame with the cabinet on the side of the door, that is, the flat door is installed.
- Surface treatment: Plastic black
- Material: Iron, plastic
- Uses: Oven, test box and cabinet with good sealing requirements

塑膠圖

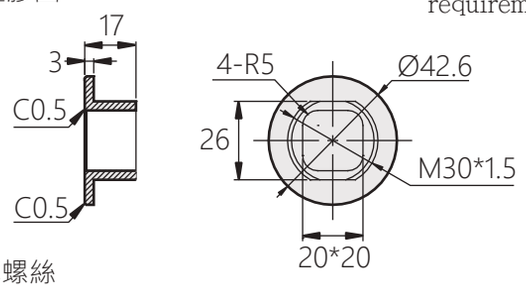

開孔尺寸

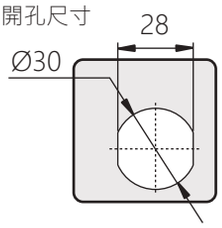

鐵螺絲

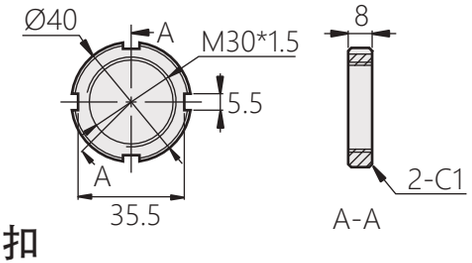

安裝示意圖

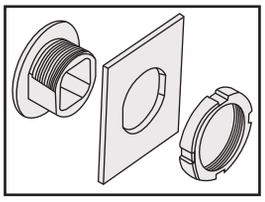

上偏心型箱扣

DK-17

Stainless Steel Over-Center Draw Latch



商品介紹:

- 操作簡單，簡易安裝
- 材質:不鏽鋼 304、鐵
- 表面處理:震動研磨

Product description:

- Easy to operate, easy to install
- Material: Stainless steel 304, iron
- Surface treatment: Vibration grind

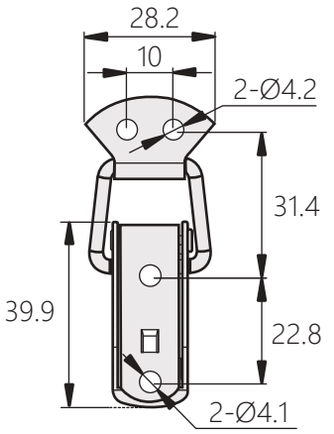

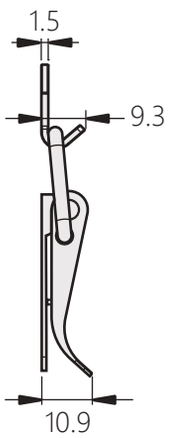

商品型號	材質
DK-17-1	不鏽鋼
DK-17-2	鐵

平搭扣 DK-8001

Flat buckle



商品介紹:
- ■可安裝於側門和平門
- ■材質:不鏽鋼304或鐵
- ■表面處理:震動研磨或鍍鎳
- ■用途:櫃門、電箱、電櫃

Product description:
- ■Can be installed in side doors and flat doors
- ■Material: Stainless steel 304 or iron
- ■Surface treatment: Nickel plating or vibration grinding
- ■Uses: Cabinet door, electric box, electric cabinet

[DK-8001-1-1 DK-8001-2-1]

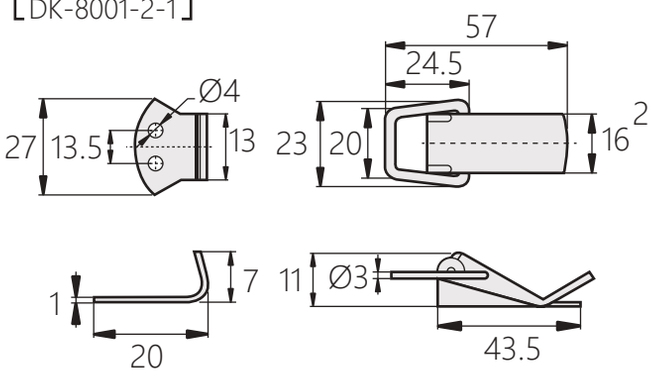

[DK-8001-1-2 DK-8001-2-2]

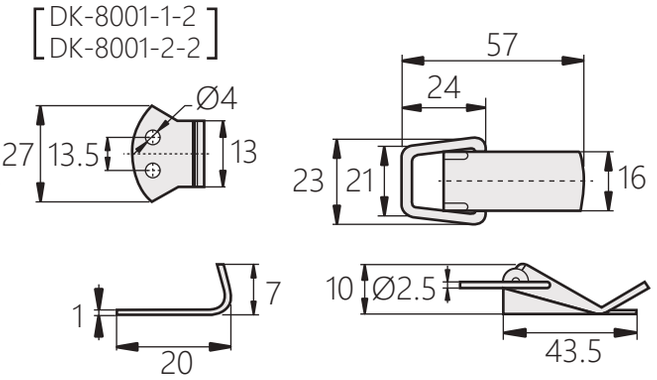

開孔尺寸

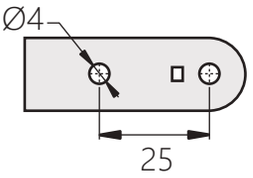

商品型號		材質	表面處理
無鎖孔	有鎖孔		
DK-8001-1-1	DK-8001-1-2	不鏽鋼	震動研磨
DK-8001-2-1	DK-8001-2-2	鐵	鍍鎳

帶鎖孔搭扣 DK-8002

With keyhole buckle



商品介紹:
- ■可安裝於側門和平門
- ■左右兼用型
- ■材質:不鏽鋼304或鐵
- ■表面處理:震動研磨或鍍鎳
- ■用途:櫃門、電箱、電櫃

Product description:
- ■Can be installed in side doors and flat doors
- ■Left and right
- ■Material: Stainless steel 304 or iron
- ■Surface treatment: Vibratory grinding or nickel plating
- ■Uses: Cabinet door, electric box, electric cabinet

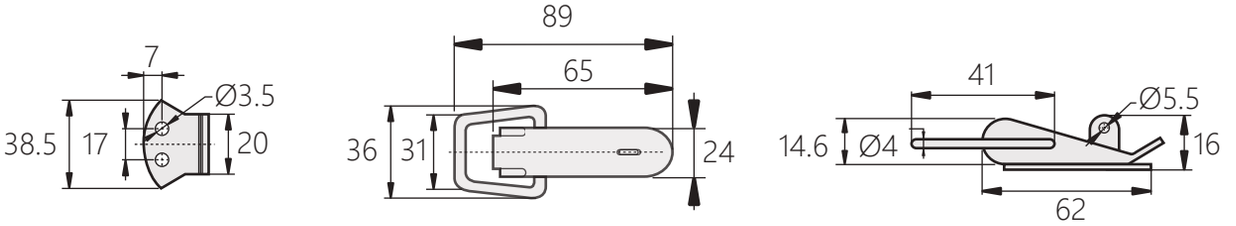

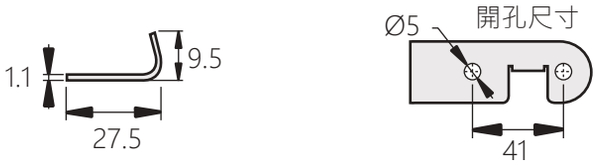

商品型號	材質	表面處理
DK-8002-1	不鏽鋼	震動研磨
DK-8002-2	鐵	鍍鎳

平搭扣
DK-8003

Draw Latch



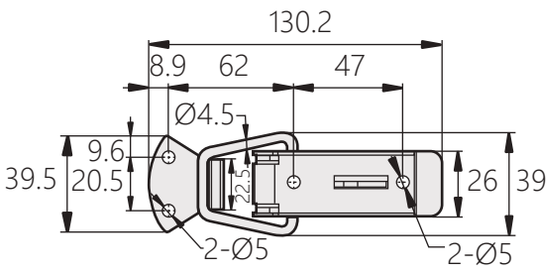

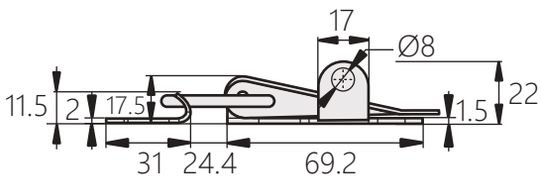

商品介紹:
- ■可安裝於側門和平門
- ■左右兼用型
- ■材質:不鏽鋼304或鐵
- ■表面處理:震動研磨或鍍鎳
- ■用途:櫃門、電箱、電櫃

Product description:
- ■Suitable for side door and flat door installation
- ■Suitable for left and right side latching
- ■Material: Stainless steel 304 or spcc
- ■Surface treatment: Vibratory grinding or nickel plating
- ■Uses: Cabinet door, electric box, electric cabinet

商品型號	材質	表面處理	規格
DK-8003-1-1	不鏽鋼	震動研磨	有掛鎖
DK-8003-1-2	不鏽鋼	震動研磨	無掛鎖
DK-8003-2-1	鐵	鍍鎳	有掛鎖
DK-8003-2-2	鐵	鍍鎳	無掛鎖

平搭扣
DK-8004

Draw Latch



商品介紹:
- ■可安裝於側門和平門
- ■左右兼用型
- ■材質:不鏽鋼304或鐵
- ■表面處理:震動研磨或鍍鎳
- ■用途:櫃門、電箱、電櫃

Product description:
- ■Suitable for side door and flat door installation
- ■Suitable for left and right side latching
- ■Material: Stainless steel 304 or spcc
- ■Surface treatment: Vibratory grinding or nickel plating
- ■Uses: Cabinet door, electric box, electric cabinet

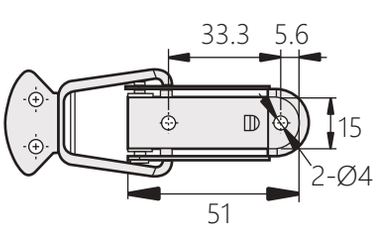

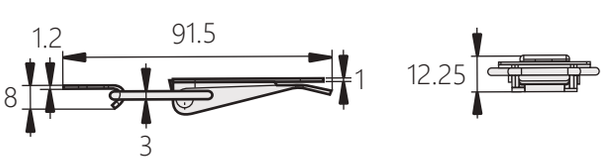

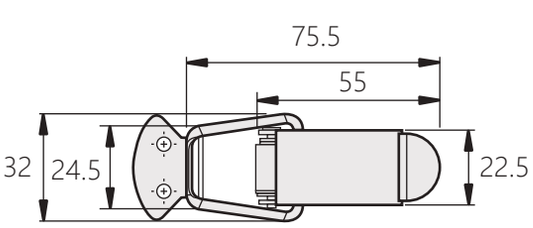

商品型號	材質	表面處理
DK-8004-1	不鏽鋼304	震動研磨
DK-8004-2	鐵	鍍鎳

平搭扣 DK-8031

Flat buckle



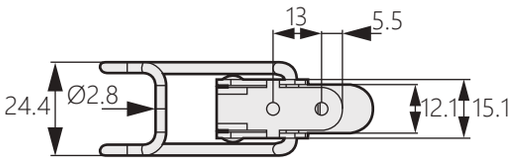

商品介紹:
- 扣環特殊結構設計，增加扣緊性能
- 材質:不鏽鋼（SUS304）
- 表面處理:震動拋光
- 用途:機箱機櫃、工業箱體、行業設備等

Product description:
- The special structure design of the buckle increases the fastening performance.
- Material: Stainless steel (SUS304)
- Surface treatment: Vibration polishing
- Uses: Chassis cabinets, industrial cabinets, industrial equipment, etc.

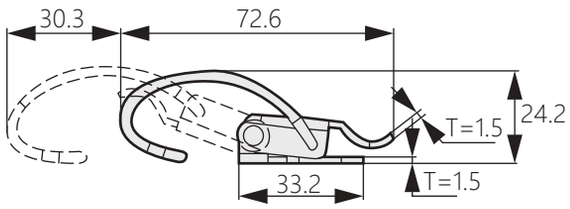

微型平搭扣 DK-8027

Mini flat buckle



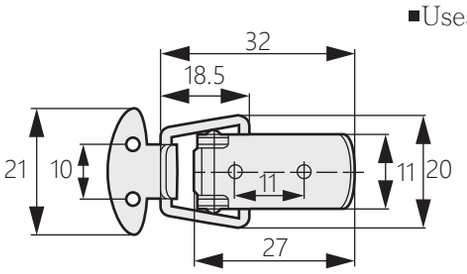

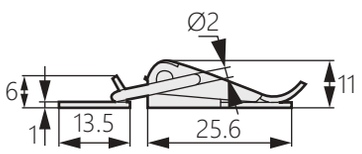

商品介紹:
- 材質:鐵（SPCC）
- 表面處理:鍍鎳
- 用途:小型及微小型箱體用

Product description:
- Material: Iron (SPCC)
- Surface treatment: Nickel plating
- Uses: For small and micro boxes

不鏽鋼彈簧迫緊式搭扣 DK-605

Stainless Steel Spring Loaded Draw Latch



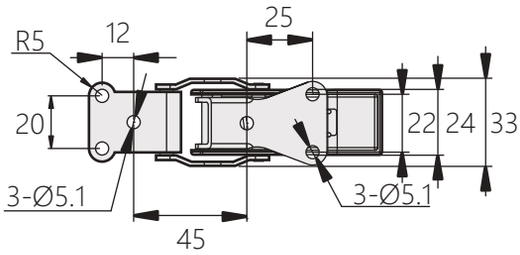

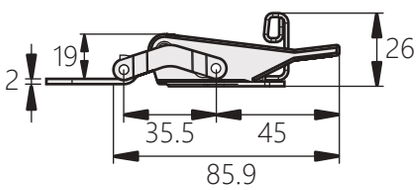

商品介紹:
- 內置彈簧設計可補償設計上或是震動所產生的間隙並迫緊物件
- 材質:不鏽鋼 304
- 表面處理:震動研磨

Product description:
- Internal spring loaded design compensates for tolerance and vibrations
- Material: Stainless Steel 304
- Surface treatment: Vibration Grind

不鏽鋼平搭扣

DK-054

Stainless steel flat buckle



商品介紹:
- ■可安裝於側門或平門
- ■內置彈簧結構，強力迫緊
- ■材質:不鏽鋼（SUS304）
- ■表面處理:震動研磨
- ■用途:櫃門、電箱、電櫃等

Product description:
- ■Can be mounted on side or flat doors
- ■Built-in spring structure, strong and tight
- ■Material: Stainless steel (SUS304)
- ■Surface treatment: Vibration grinding
- ■Uses: Cabinet door, electric box, electric cabinet, etc.

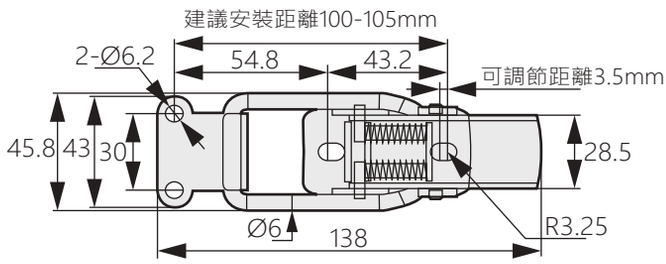

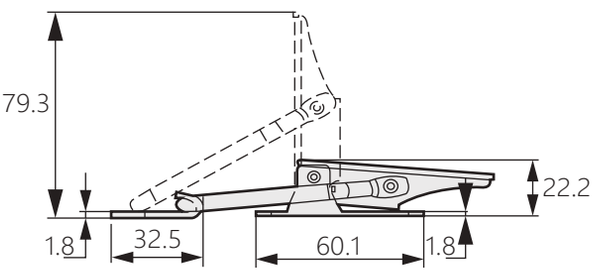

平搭扣

DK-057

Iron flat buckle



商品介紹:
- ■可安裝於側門或平門
- ■內置彈簧結構，強力迫緊
- ■材質:鐵
- ■表面處理:鍍鉻
- ■用途:櫃門、電箱、電櫃等

Product description:
- ■Can be mounted on side or flat doors
- ■Built-in spring structure, strong and tight
- ■Material: Iron
- ■Surface treatment: Chrome
- ■Uses: Cabinet door, electric box, electric cabinet, etc.

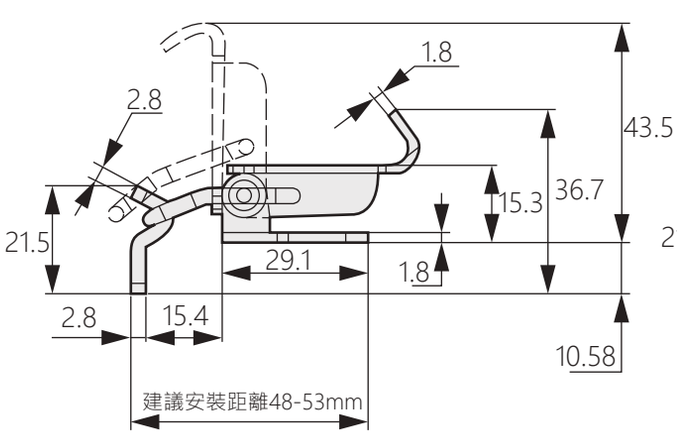

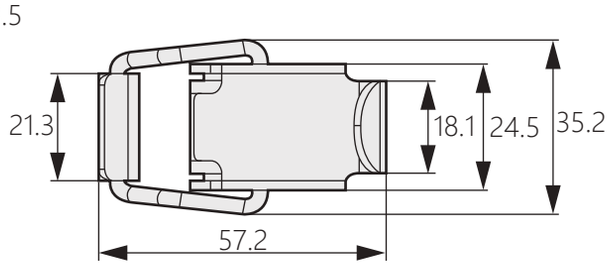

不鏽鋼櫃門搭扣

Stainless steel cabinet door buckle

DK-061



商品介紹:

- ■開啟時按下旁邊鎖定銷釘
- ■用手柄自動鎖定，即使振動也不會鬆脫
- ■材質:不鏽鋼（SUS304）
- ■表面處理:震動研磨
- ■用途:機箱機櫃、工業箱體、行業設備等

Product description:

- ■Press the side lock pin when opening
- ■Automatic lock with handle, won't loose even if vibration
- ■Material: Stainless steel (SUS304)
- ■Surface treatment: Vibration grinding
- ■Uses: Chassis cabinets, industrial cabinets, industrial equipment, etc.

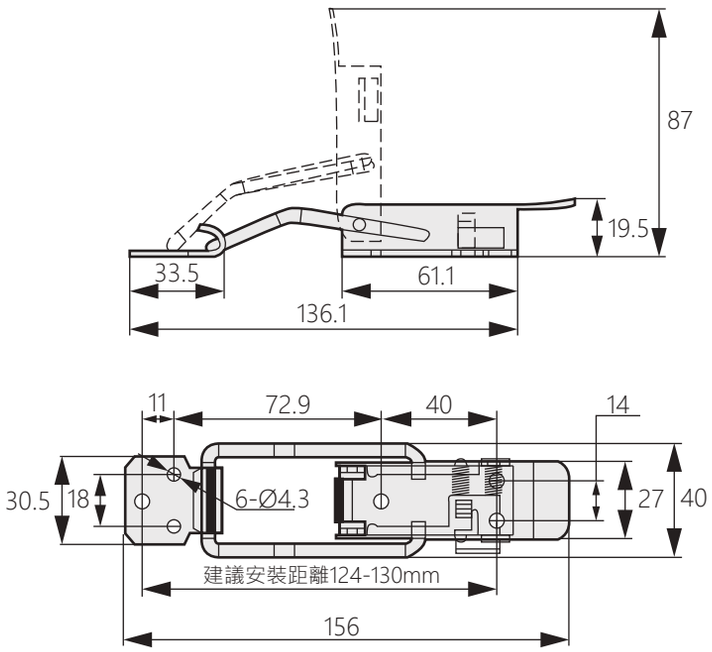

[DK-061-2]

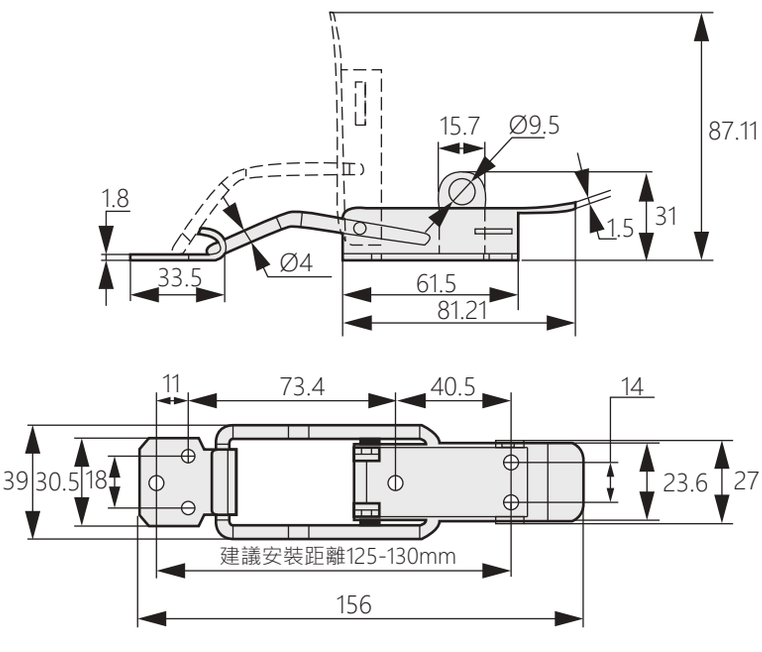

[DK-061-1]

商品型號	掛鎖
DK-061-1	有
DK-061-2	無

迫緊平搭扣

Forced flat buckle

DK-145



商品介紹:

- 中荷重18-23.5kgf
- 線環特殊設計，禁久不鬆脫
- 金屬彈性弧形鉤
- 材質:鐵(SPCC)、不鏽鋼(SUS304)
- 表面處理:鍍鋅、震動亮面

Product description:

- Medium load 18-23.5kgf
- The special design of the wire loop will not loosen for a long time
- Metal elastic arc hook
- Material: Iron (SPCC), stainless steel (SUS304)
- Surface treatment: Galvanized, vibrating bright surface

[DK-145-1-1] [DK-145-2-1]

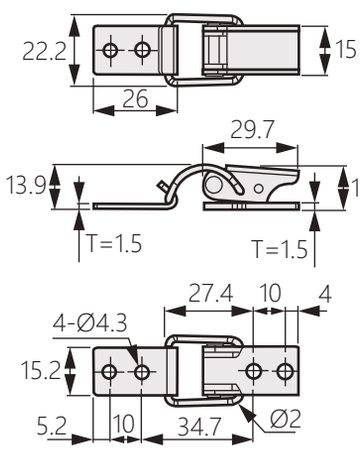

[DK-145-1-2] [DK-145-2-2]

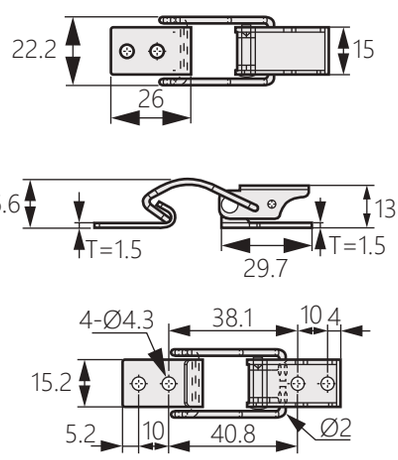

[DK-145-1-3] [DK-145-2-3]

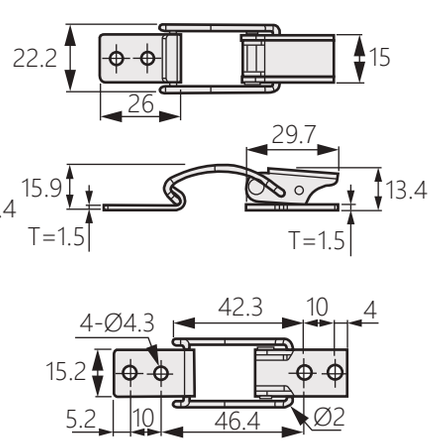

[DK-145-1-4] [DK-145-2-4]

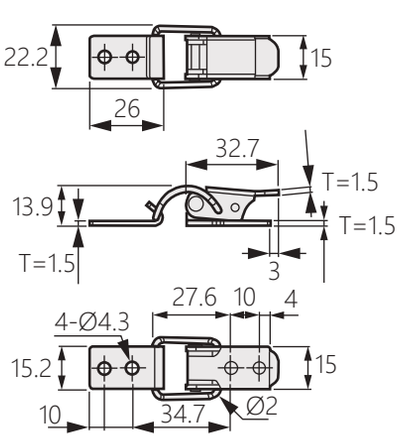

[DK-145-1-5] [DK-145-2-5]

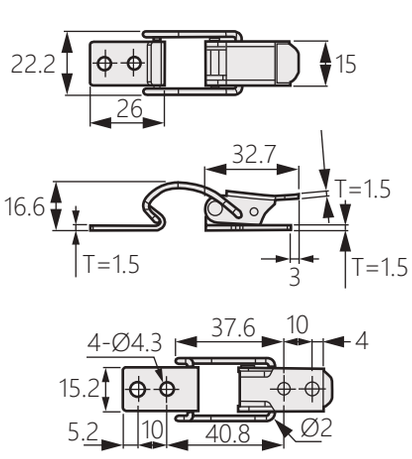

[DK-145-1-6] [DK-145-2-6]

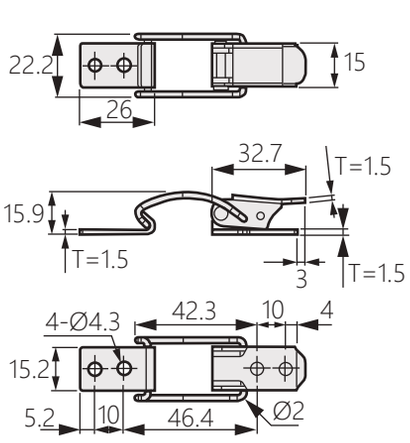

商品型號	材質	建議荷重(kgf)
DK-145-1-1	不鏽鋼	22
DK-145-1-2		21
DK-145-1-3		20
DK-145-1-4		21
DK-145-1-5		20
DK-145-1-6		22

商品型號	材質	建議荷重(kgf)
DK-145-2-1	鐵	22
DK-145-2-2		
DK-145-2-3		
DK-145-2-4		
DK-145-2-5		
DK-145-2-6		

平搭扣

Flat buckle

DK-146



商品介紹:

- ■簡易安裝，強力迫緊性能
- ■不同的扣環結構設計，適合不同的要求
- ■材質:不鏽鋼(SUS304)、鐵（SPCC）
- ■表面處理:震動研磨、鍍藍鋅
- ■用途:機箱機櫃、工業箱體、行業設備等

Product description:

- ■Easy installation, strong and tight performance
- ■Different buckle structure design for different requirements
- ■Material: Stainless steel (SUS304), iron (SPCC)
- ■Surface treatment: Vibration grinding, blue zinc plating
- ■Uses: Chassis cabinets, industrial cabinets, industrial equipment, etc

[DK-146-1-1]
[DK-146-2-1]

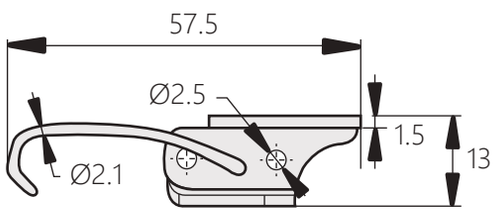

[DK-146-1-2]
[DK-146-2-2]

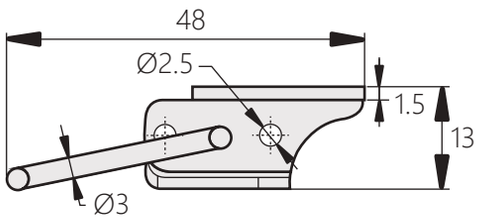

[DK-146-1-3]
[DK-146-2-3]

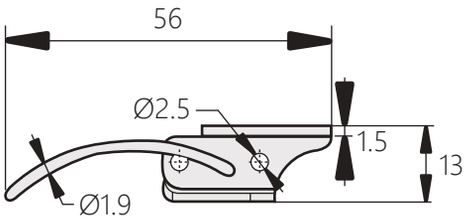

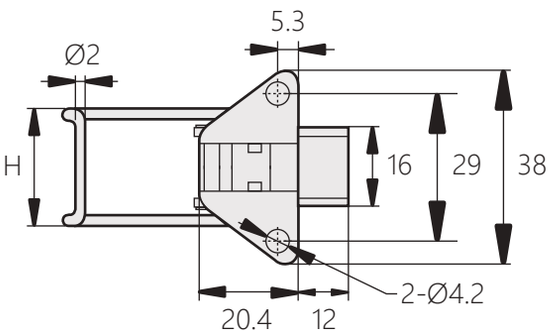

[DK-146-1-4]

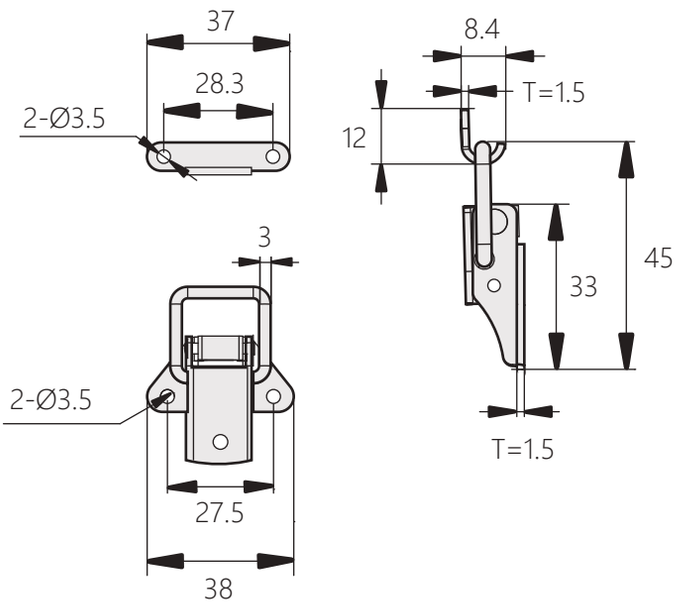

商品型號	材質	表面處理	H
DK-146-1-1	不鏽鋼 304	震動研磨	24
DK-146-1-2			24
DK-146-1-3			26
DK-146-1-4			
DK-146-2-1	鐵	鍍藍鋅	24
DK-146-2-2			24
DK-146-2-3			26

不鏽鋼彈簧迫緊式搭扣

DK-163

Stainless Steel Spring Loaded Draw Latch



商品介紹:

- 內置彈簧設計可補償設計上或是震動所產生的間隙並迫緊物件
- 材質:不鏽鋼 304
- 表面處理:震動研磨

Product description:

- Internal spring loaded design compensates for tolerance and vibrations.
- Material: Stainless Steel 304
- Surface treatment: Vibration Grind

開孔尺寸

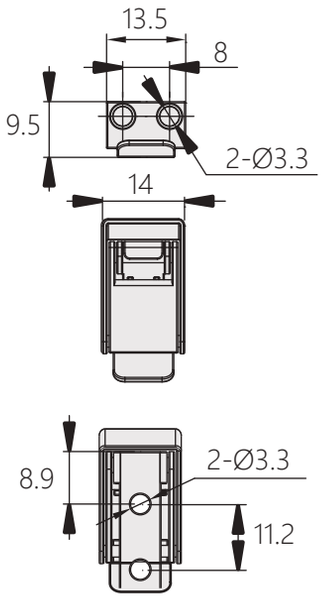

[DK-163-1]

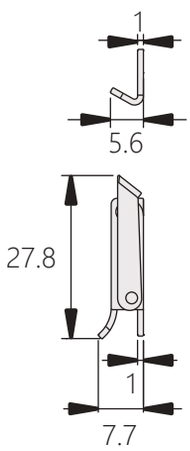

[DK-163-2]

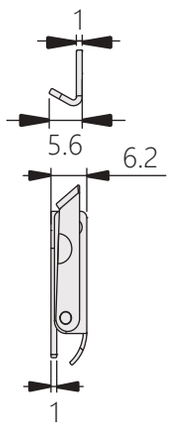

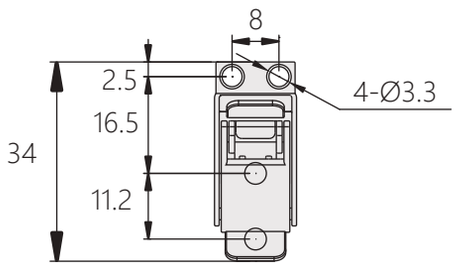

商品型號	外觀樣式
DK-163-1	手柄上彎型
DK-163-2	手柄下彎型

鈑金結構設備門鎖扳手

DK-010

Clean room magnet



商品介紹:

- 外形結構簡單，安裝方便
- 功能獨特，內置彈簧結構
- 材質:冷軋鋼板和塑膠
- 表面處理:鍍白鋅和黑色
- 用途:網絡設備、鈑金結構設備、抽屜

Product description:

- Simple structure and easy installation
- Unique function, built-in spring structure
- Material: Cold rolled steel and plastic
- Surface treatment: White zinc and black
- Uses: Network equipment, sheet metal structure equipment, drawers

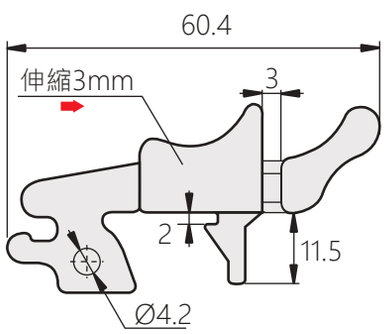

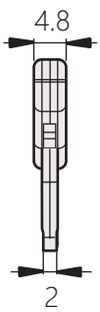

線環搭扣
Line Latch

DK-029



商品介紹:
- 體積小，適合小體積安裝
- 材質:鋼材
- 用途:需烤漆箱體、工具盒使用

Product description:
- Small size for small volume installation
- Material: Spcc
- Uses: Suitable for baking paint enclosure and toolbox

[DK-029-1]

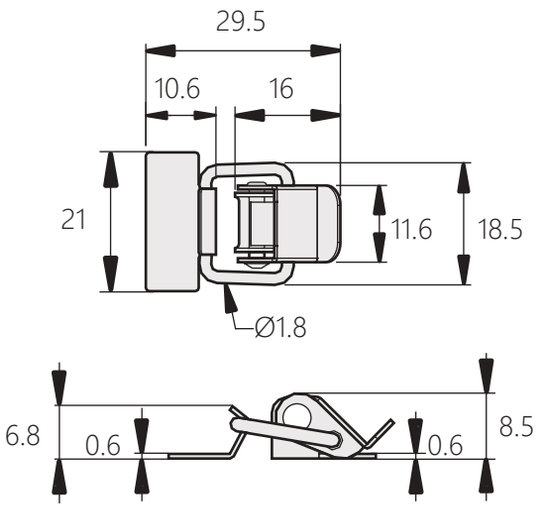

[DK-029-2]

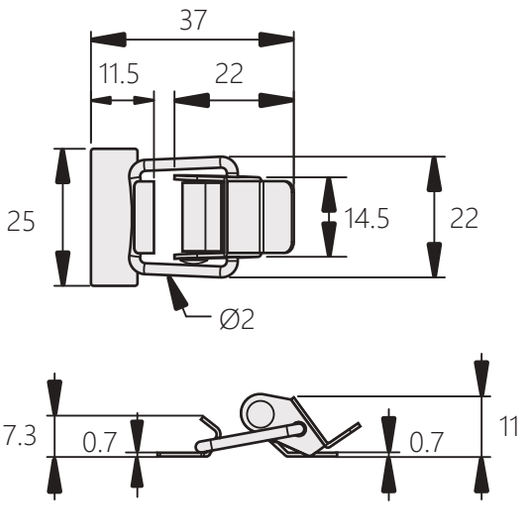

彈簧迫緊搭扣
Draw Latch

DK-169



商品介紹:
- 左右開門兼用
- 可安裝於側門和平門
- 具有強力迫緊功能
- 帶彈簧結構，迫緊程度更強
- 材質:不鏽鋼(SUS304)
- 表面處理:震動研磨
- 用途:櫃門、電箱、電櫃、電子通訊設備

Product description:
- Suitable for left and right side latching
- Suitable for side door and flat door installation
- With strong compression force
- With spring structure, stronger compression force
- Material: Stainless steel (SUS304)
- Surface treatment: Vibration grinding
- Uses: Cabinet door, electric box, electric cabinet, electronic communication equipment

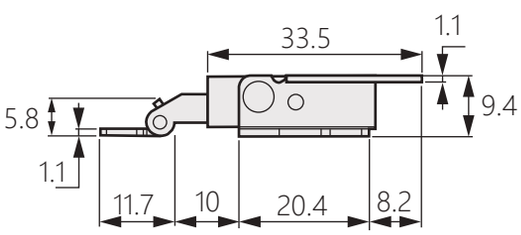

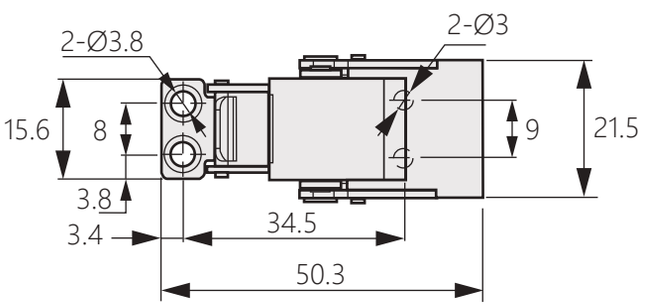

不鏽鋼彈簧迫緊式搭扣

DK-168

Stainless Steel Spring Loaded Draw Latch



商品介紹:
- 內置彈簧設計可補償設計上或是震動所產生的間隙並迫緊物件
- 材質:不鏽鋼 304
- 表面處理:震動研磨

Product description:
- Internal spring loaded design compensates for tolerance and vibrations
- Material: Stainless Steel 304
- Surface treatment: Vibration Grind

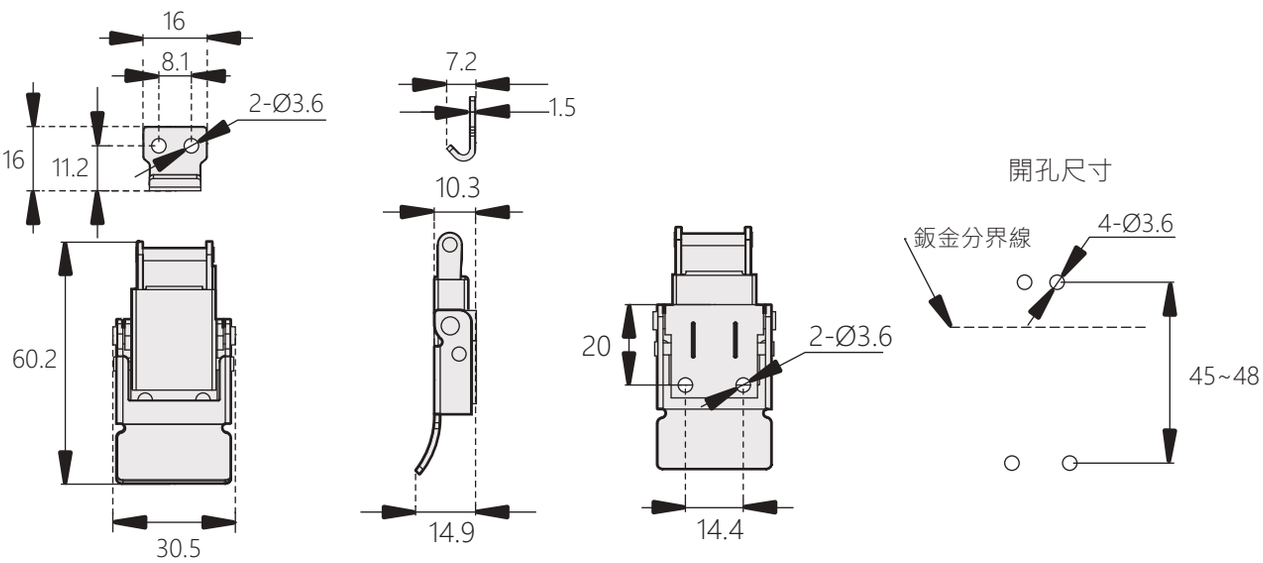

無塵室磁鐵

DK-10395

Clean room magnet



商品介紹:
- 材質:塑鋼 POM
- 磁鐵吸力: 3800 guas

Product description:
- Material: Plastic steel POM
- Magnet suction: 3800 guas

磁鐵磁力:3800

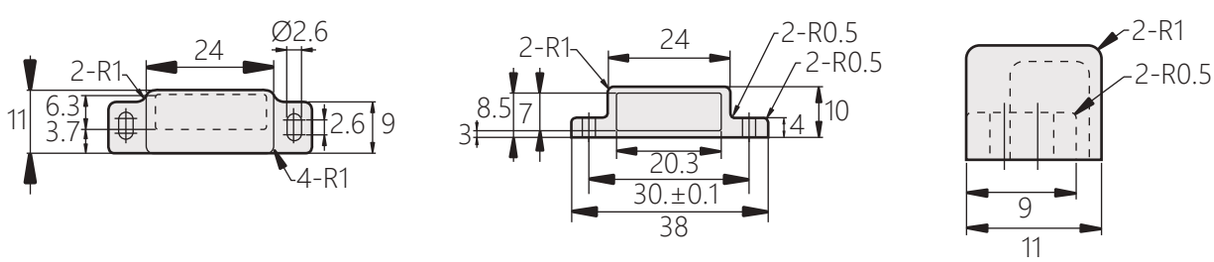

鎖扣 DK-1101

Lock



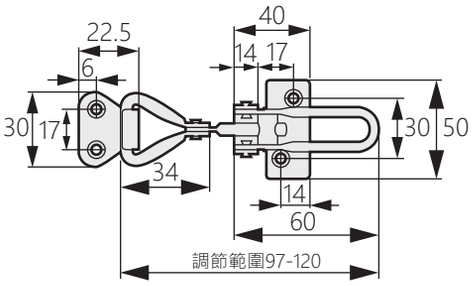

商品介紹:
- ■最大靜載荷:50KG
- ■材質:不鏽鋼304
- ■表面處理:鏡光,拉絲
- ■用途:箱櫃,廚具,酒店設備,工業設備等

Product description:
- ■MAX Load weight: 50kg
- ■Material: Stainless Steel 304
- ■Surface treatment: Mirror Poloshing,drawbench
- ■Uses: Kitchen Equipment ,Cabinet,Vehicle, Vessel,Hotel Facilities,Machinery,etc.

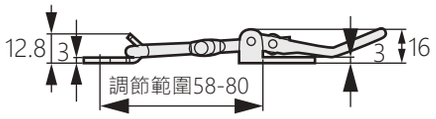

鎖扣 DK-1201

Lock



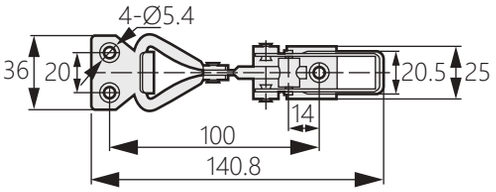

商品介紹:
- ■最大靜載荷:50KG
- ■材質:不鏽鋼304
- ■表面處理:鏡光,拉絲
- ■用途:箱櫃,廚具,車輛,船舶,酒店設備,機械等

Product description:
- ■MAX Load weight: 50kg
- ■Material: Stainless Steel 304
- ■Surface treatment: Mirror Poloshing,drawbench
- ■Uses: Kitchen equipment ,cabinet,vehicle, vessel,hotel facilities,machinery,etc.

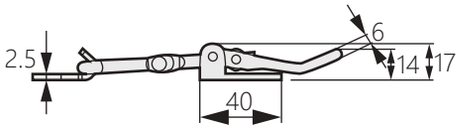

鎖扣 DK-1202

Lock



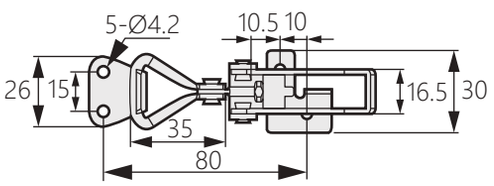

商品介紹:
- ■最大靜載荷:50KG
- ■材質:不鏽鋼304
- ■表面處理:鏡光,拉絲
- ■用途:箱櫃,廚具,酒店設備,工業設備等

Product description:
- ■MAX Load weight: 50kg
- ■Material: Stainless Steel 304
- ■Surface treatment: Mirror Poloshing,drawbench
- ■Uses: Kitchen Equipment ,Cabinet,Vehicle, Vessel,Hotel Facilities,Machinery,etc.

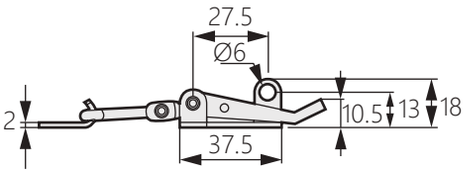

鎖扣 DK-1204

Lock



商品介紹:
- ■最大靜載荷:60KG
- ■材質:不鏽鋼304
- ■表面處理:鏡光,拉絲
- ■用途:箱櫃,廚具,酒店設備,工業設備等

Product description:
- ■MAX Load weight: 60kg
- ■Material: Stainless Steel 304
- ■Surface treatment: Mirror Poloshing,drawbench
- ■Uses: Kitchen Equipment ,Cabinet,Vehicle, Vessel,Hotel Facilities,Machinery,etc.

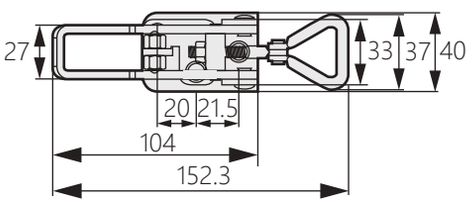

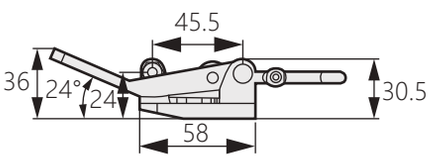

鎖扣 DK-1205

Lock



商品介紹:
- ■最大靜載荷:60KG
- ■材質:不鏽鋼304
- ■表面處理:鏡光,拉絲
- ■用途:箱櫃,廚具,酒店設備,工業設備等

Product description:
- ■MAX Load weight: 60kg
- ■Material: Stainless Steel 304
- ■Surface treatment: Mirror Poloshing,drawbench
- ■Uses: Cabinet,Kitchen Equipment,Hotel Facilitrial, Industrial Equipment,etc.

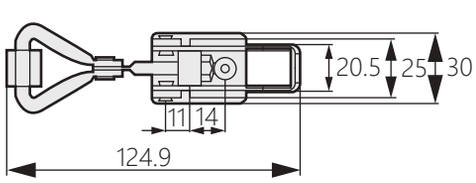

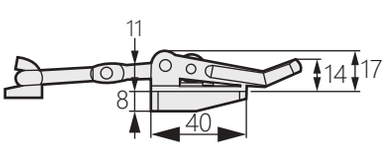

鎖扣 DK-1203

Lock



商品介紹:
- ■最大靜載荷:50KG
- ■材質:不鏽鋼304
- ■表面處理:鏡光,拉絲
- ■用途:箱櫃,廚具,車輛,船舶,酒店設備,機械等

Product description:
- ■MAX Load weight: 50kg
- ■Material: Stainless Steel 304
- ■Surface treatment: Mirror Poloshing,drawbench
- ■Uses: Kitchen equipment ,cabinet,vehicle, vessel,hotel facilities,machinery,etc.

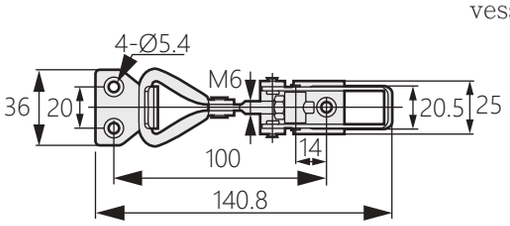

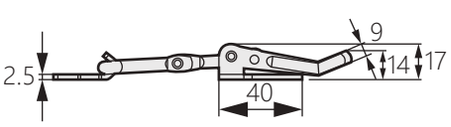

迫緊搭扣

DK-8009

Pressing hasp



商品介紹:

- ■具有強力迫緊功能
- ■可加插銷鎖定手柄，保證手柄不鬆脫
- ■材質:鐵（SPCC）、不鏽鋼（SUS304）
- ■表面處理:鍍鋅、震動研磨
- ■用途:機箱機櫃、工業箱體、震動設備等

Product description:

- ■With strong pressing function
- ■Locking handle can be added to ensure that the handle does not come loose.
- ■Material: Iron (SPCC), Stainless steel (SUS304)
- ■Surface treatment: Galvanized, vibration grinding
- ■Uses: Chassis cabinets, industrial cabinets, vibration equipment, etc.

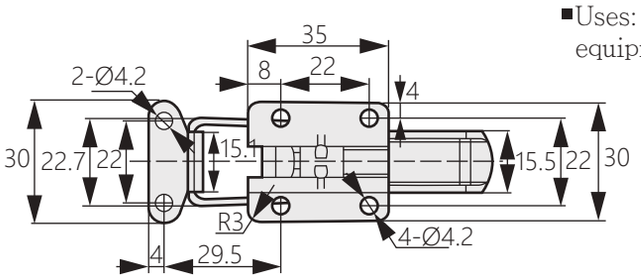

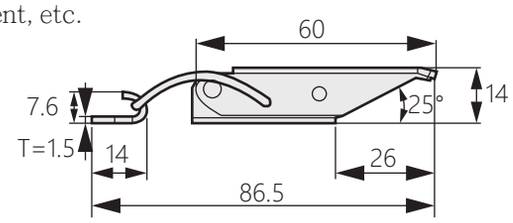

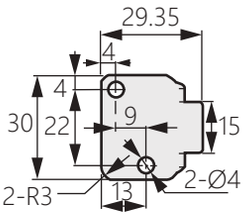

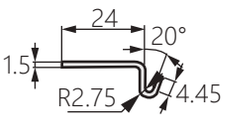



商品型號	材質
DK-8009-1	不鏽鋼
DK-8009-2	鐵

迫緊搭扣

DK-8053

Pressing hasp



商品介紹:

- ■用手柄自動鎖定，即使振動也不會脫落
- ■材質:不鏽鋼（SUS304）、鐵（SPCC）
- ■表面處理:震動研磨、鍍鎳
- ■用途:櫃門、電箱、電櫃
- ■備註:DK-8053-1-2,DK-8053-2-2可使用掛鎖上鎖

Product description:

- ■Automatic lock with handle, won't fall off even if vibration.
- ■Material: Stainless steel (SUS304), Iron (SPCC)
- ■Surface treatment: Vibration grinding, nickel plating
- ■Uses: Cabinet door, electric box, electric cabinet.
- ■Note: DK-8053-1-2, DK-8053-2-2 can be locked with padlock

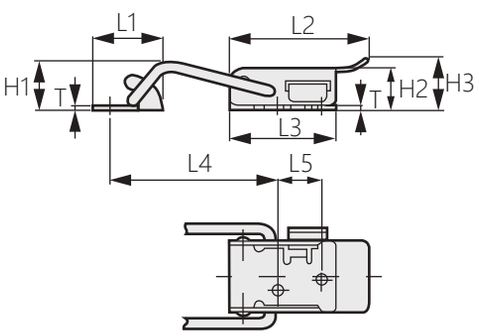

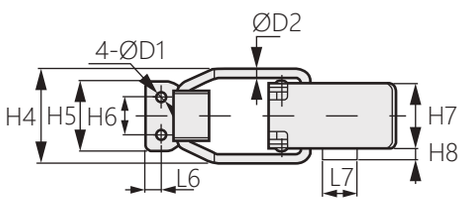

商品型號	材質	L1	L2	L3	L4	L5	L6	H1	H2	H3	H4	H5	H6	H7	H8	D1	D2	T
DK-8053-1-1	不鏽鋼	20	41	30.5	47	13	3.5	10	12	14	31	22	12	20.5	4	3.2	3	1
DK-8053-1-2		26	55	39.5	65	20	5	12	13	16	38	26	13	25		3.3	3.5	1.3
DK-8053-2-1	鐵	20	41	30.5	47	13	3.5	10	12	14	31	22	12	20.5		3.2	3	1
DK-8053-2-2		26	55	39.5	65	20	5	12	13	16	38	26	13	25		3.3	3.5	1.3

調節迫緊搭扣

DK-8015

Stainless steel butterfly buckle



商品介紹:
- ■可安裝於側門和平門
- ■帶螺紋調節扣，迫緊強度可調節
- ■材質:不鏽鋼SUS304，鐵（SPCC）
- ■表面處理:震動研磨，鍍鎳
- ■用途:特殊車輛，機床，船舶
- ■備註:可另加購鉤座

Product description:
- ■Can be installed in side doors and flat doors
- ■Threaded adjustment buckle for adjustable tension
- ■Material: Stainless steel SUS304, iron (SPCC)
- ■Surface treatment: Vibrating grinding, nickel plating
- ■Uses: Special vehicles, machine tools, ships
- ■Note: You can purchase additional hooks

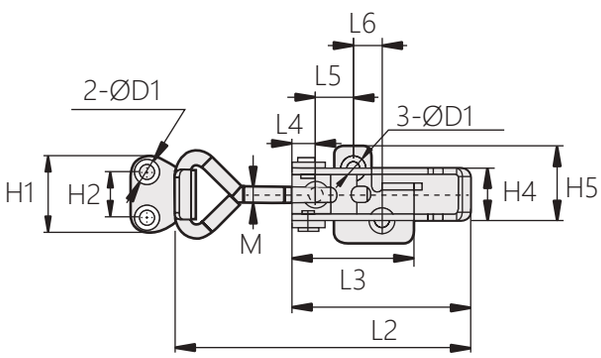

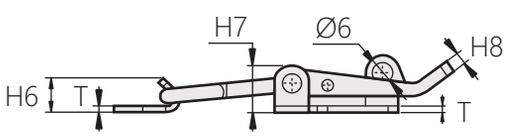

鉤座尺寸圖
(型號:A16)

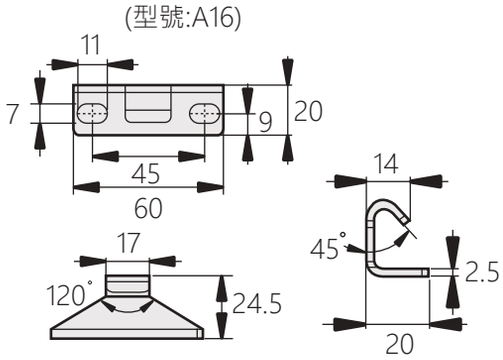

安裝示意圖

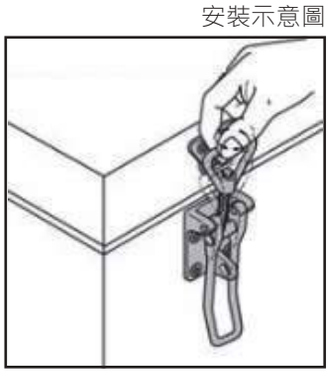

加掛鎖示意圖

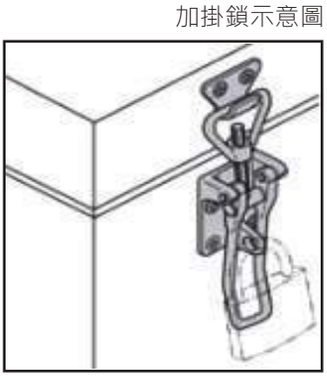

商品型號		L1	L2	L3	L4	L5	L6	H1	H2
不鏽鋼	鐵								
DK-8015-1-1	DK-8015-2-1	75-95	55	30	8	11	9	24	14
DK-8015-1-2	DK-8015-2-2	97-123	67	50	14	11	16	30	17
DK-8015-1-3	DK-8015-2-3	137-164	99	61	12	19	17	45	22

商品型號		H3	H4	H5	H6	H7	H8	D1	M	T
不鏽鋼	鐵									
DK-8015-1-1	DK-8015-2-1	8	16	30	10.6	14	4	4.5	M5	2
DK-8015-1-2	DK-8015-2-2	9	20	32	13	17	5.3	5.3	M6	2.5
DK-8015-1-3	DK-8015-2-3	11	30	40	17	22	7	5.3	M8	3

彈簧迫緊搭扣

Stainless Steel Spring Loaded Draw Latch

DK-8006



商品介紹:
- ■鉤座擰緊程度可調節
- ■具有鎖定功能，關閉時可自動鎖定不鬆脫
- ■材質:不鏽鋼(SUS304)
- ■表面處理:震動研磨
- ■用途:櫃門、電箱、電櫃

Product description:
- ■Smooth appearance without hurting hands
- ■Spring on both sides for forced function
- ■Material: Stainless steel (SUS304)
- ■Surface treatment: Vibratory grinding
- ■Uses: Cabinet door, electric box, electric cabinet

[DK-8006-1]

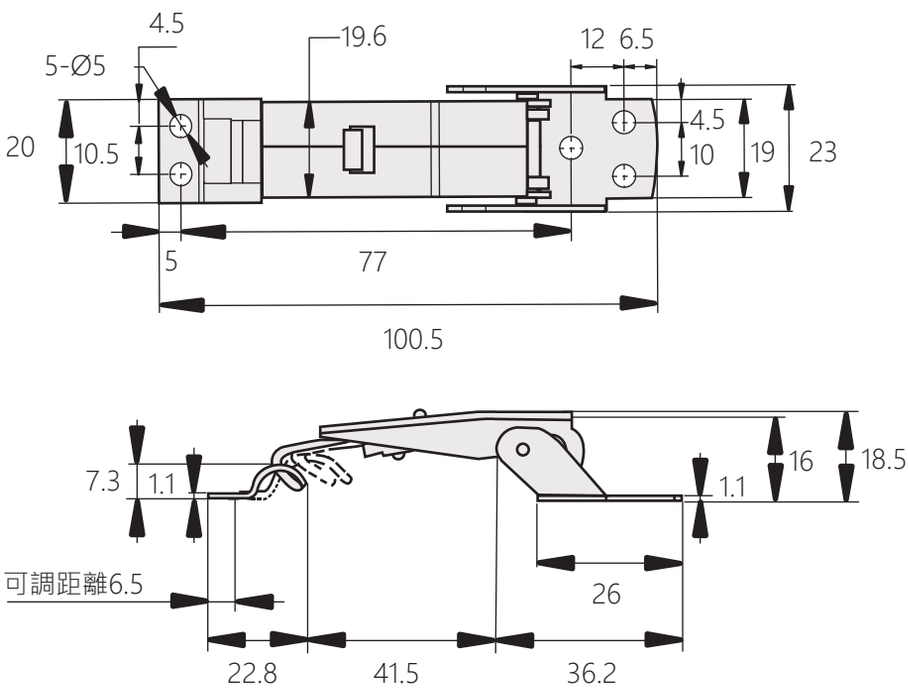

[DK-8006-2]

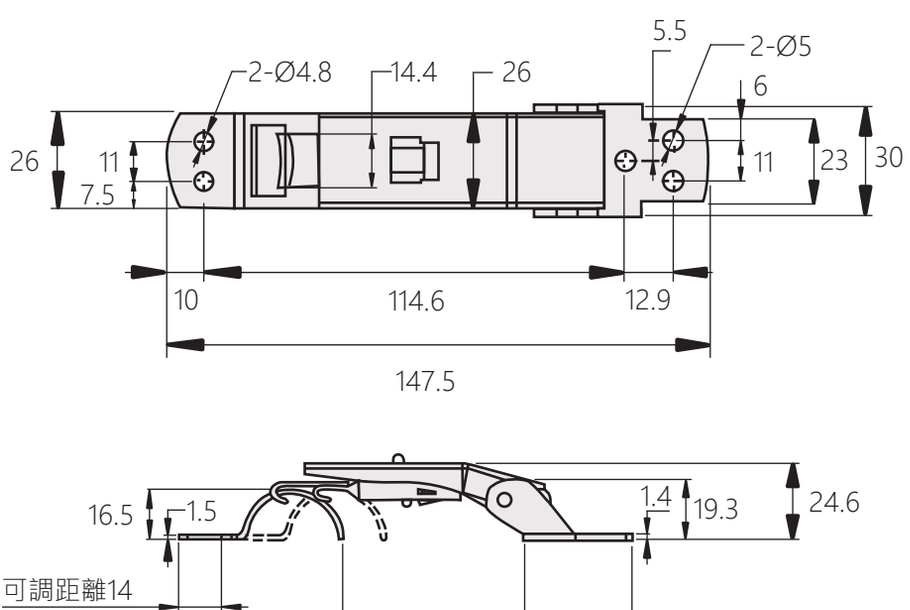

可調式下偏心型搭扣 DK-100

Stainless Steel Spring Loaded Draw Latch



商品介紹:

- 固定間距設計使面板精確定位
  金屬鑄造的外殼將所有組件包覆在內，
  兼具外觀及防撬功能
- 材質:鋅合金 (ZDC)
- 表面處理:鍍鉻、黑色塗裝
- 另有無鎖芯式樣可供訂製

Product description:

- These Latches accommodate misalignment and provide robust, secure latching, even when the latch and keeper are not coplanar
- Material: Zinc Alloy (ZDC)
- Surface treatment: Bright Chrome Plated ; Black Powder Coated
- Also Available Without Lock (Customize)

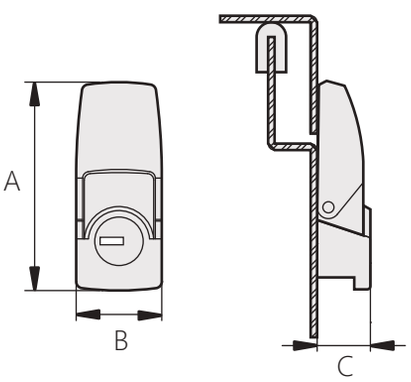

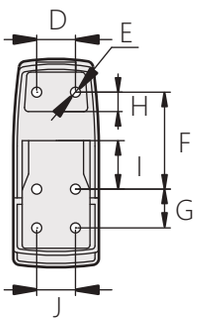

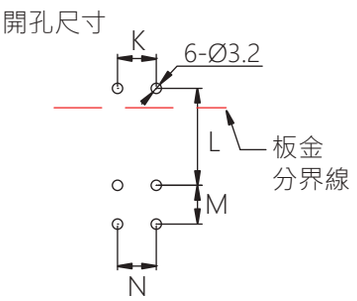

商品型號		A	B	C	D	E	F	G	H	I	J	K	L	M	N
鍍鉻	黑色塗裝														
DK-100-1-1	DK-100-2-1	75	32	19.9	16	Ø3.2	35.5	12	6	18.5	16	16	35.5	12	16
DK-100-1-2	DK-100-2-2	64.5	26.5	16.5	12	Ø3.1	30	12	6	15	12	12	30	12	12

可調式下偏心型搭扣 DK-6021

Stainless Steel Spring Loaded Draw Latch



商品介紹:

- 即使在主體和鎖勾不處於同一平面的
  情況下也可牢固安全的鎖閉
  並且能將所有的安裝組件隱藏在手柄之下
- 材質:鐵、不鏽鋼304

Product description:

- These Latches accommodate misalignment and provide robust, secure latching, even when the latch and keeper are not coplanar
- Material: Steel, Stainless Steel 304

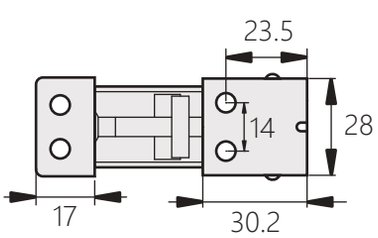

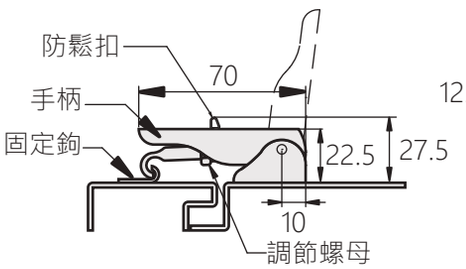

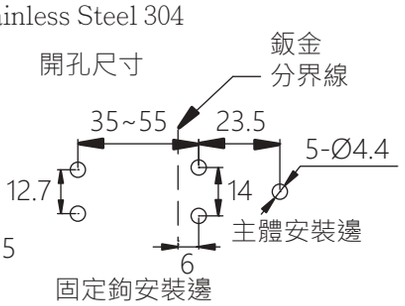

商品型號	材質
DK-6021-1	鐵
DK-6021-2	不鏽鋼

調節搭扣

DK-6022

Adjusting buckle



商品介紹:
- 可安裝於側門和平門
- 扣環可以調節，適合不同密封厚度
- 有帶鎖扣和不帶鎖扣兩種結構形式產品
- 材質:鐵(SPCC)
- 表面處理:鍍藍鋅
- 用途:櫃門、電箱、電櫃

Product description:
- Can be installed in side doors and flat doors
- The buckle can be adjusted to suit different seal thicknesses
- There are two kinds of structural products with and without locks
- Material: Iron (SPCC)
- Surface treatment: Blue zinc plating
- Uses: Cabinet door, electric box, electric cabinet

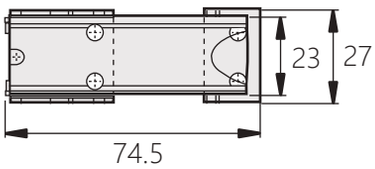

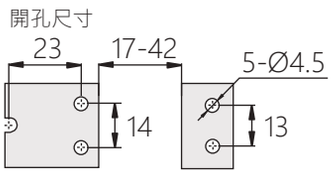

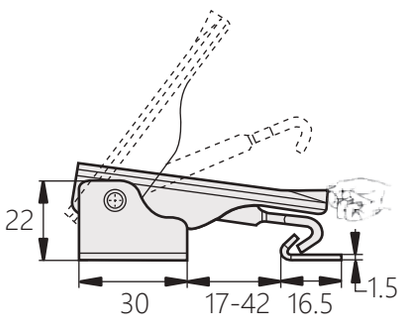

商品型號	規格
DK-6022-1	無鎖扣
DK-6022-2	有鎖扣

調節搭扣

DK-6023

Adjusting buckle



商品介紹:
- 可安裝於側門和平門
- 扣環可以調節，適合不同密封厚度
- 有帶鎖扣和不帶鎖扣兩種結構形式產品
- 材質:鐵(SPCC)
- 表面處理:鍍藍鋅
- 用途:櫃門、電箱、電櫃

Product description:
- Can be installed in side doors and flat doors
- The buckle can be adjusted to suit different seal thicknesses
- There are two kinds of structural products with and without locks
- Material: Iron (SPCC)
- Surface treatment: Blue zinc plating
- Uses: Cabinet door, electric box, electric cabinet

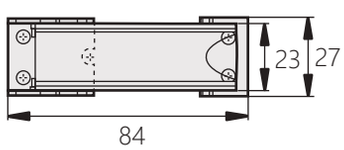

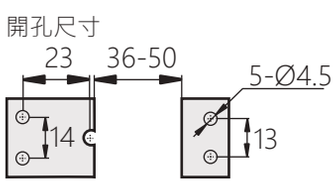

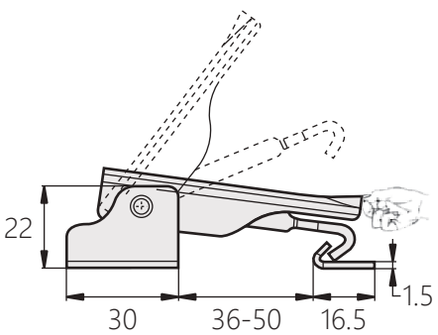

商品型號	規格
DK-6023-1	無鎖扣
DK-6023-2	有鎖扣

彈簧迫緊平搭扣

DK-321

Draw Latch



商品介紹:

- 可安裝於側門和平門
- 帶插銷鎖定功能，關閉時插銷自動鎖定手柄
- 帶彈簧結構，迫緊程度更強
- 材質:不鏽鋼(SUS304)
- 表面處理:震動研磨
- 用途:櫃門、電箱、電櫃、機械設備

Product description:

- Can be installed in side doors and flat doors
- With latch lock function, the latch automatically locks the handle when closed
- With spring structure, stronger tightening
- Material: Stainless steel (SUS304)
- Surface treatment: Vibration grinding
- Uses: Cabinet door, electric box, electric cabinet, mechanical equipment

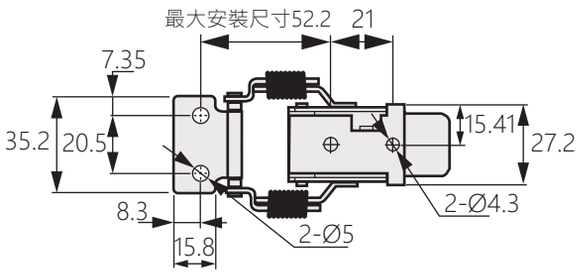

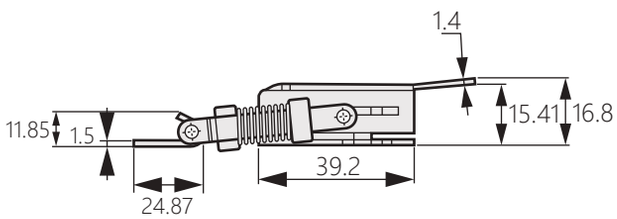

自動化設備搭扣

DK-140

Automation equipment buckle



商品介紹:

- 多孔安裝，更穩固產品
- 材質:不鏽鋼(SUS304)
- 表面處理:震動拋光
- 用途:櫃門、電箱、電櫃、機械設備

Product description:

- Porous installation, more stable product
- Surface treatment: Vibration polishing
- Material: Stainless steel (SUS304)
- Uses: Cabinet door, electric box, electric cabinet, mechanical equipment

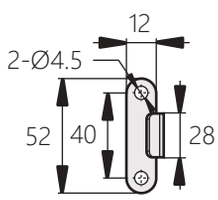

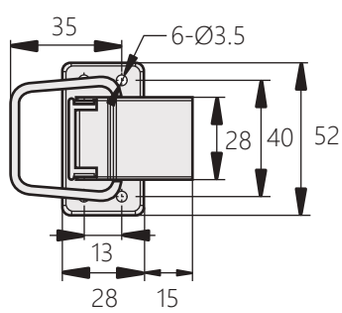

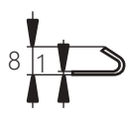

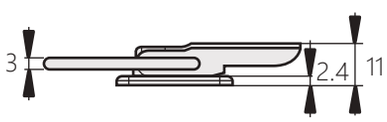

不鏽鋼彈簧迫緊式搭扣

DK-3071

Stainless Steel Spring Loaded Draw Latch



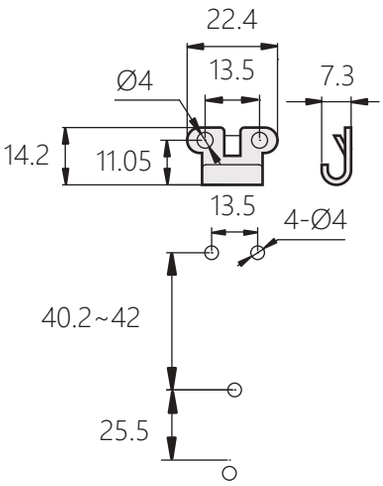

商品介紹:

- 外裝式彈簧設計可補償設計上或是震動所產生的間隙並迫緊物件
- 可提供穩定的鎖閉力道
- 材質:不鏽鋼 304
- 表面處理:震動研磨
- 用途:半導體工程、工業工程、機械五金

Product description:

- External spring loaded design compensates for tolerance and vibrations
- Provides constant hold tension for secure latching
- Material: Stainless Steel 304
- Surface treatment:Vibration Grind
- Uses: Semiconductor engineering, industrial engineering, mechanical hardware

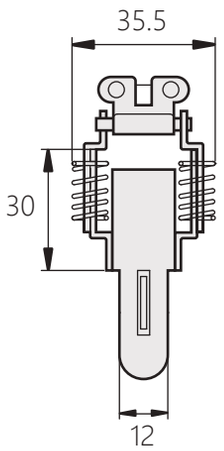

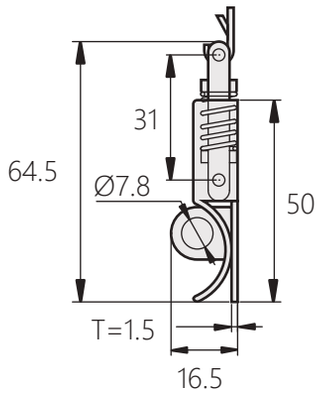

上偏心型箱扣

DK-1516

Stainless Steel Over-Center Draw Latch



商品介紹:

- 簡易安裝
- 材質:不鏽鋼304、鋼鐵
- 表面處理:震動研磨、鍍鎳

Product description:

- Easy integration
- Material: Stainless Steel 304 , Steel
- Surface treatment: Vibration Grind ; Nickle Plated

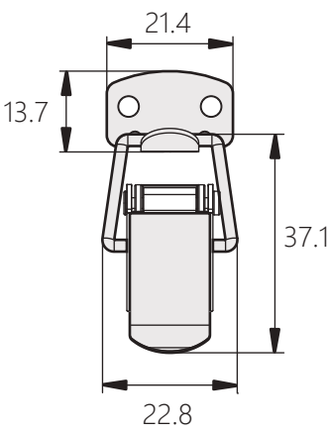

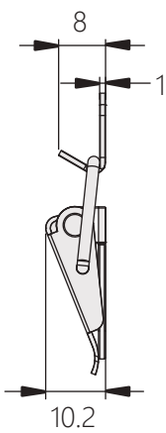

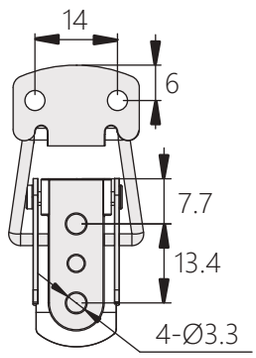

商品型號	材質
DK-1516-1	不鏽鋼
DK-1516-2	鐵

可調迫緊搭扣

Adjustable snap closure

DK-8016

RoHS SUS不鏽鋼 CAD



商品介紹:
- ■可安裝於側門和平門
- ■帶螺紋調節扣，迫緊強度可調節
- ■材質:鐵（SPCC）、不鏽鋼（SUS304）
- ■表面處理:鍍鎳、震動研磨
- ■用途:特殊車輛、機床、船舶

Product description:
- ■Can be installed on side doors and flat doors
- ■With thread adjustment buckle, adjustable tightening strength.
- ■Material: Iron (SPCC), Stainless steel (SUS304)
- ■Surface treatment: Vibration grinding, nickel plating
- ■Uses: Special vehicles, machine tools, ships.

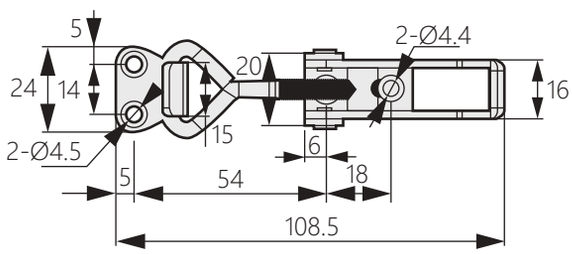

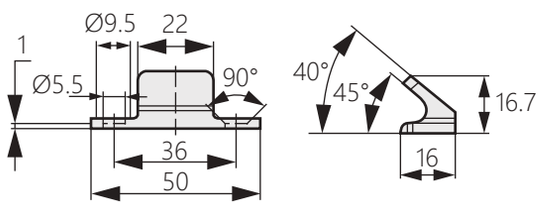

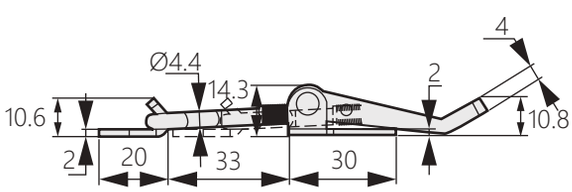

[DK-8016-1-1
DK-8016-2-1]

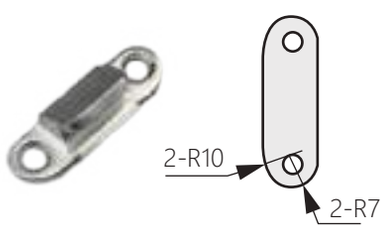

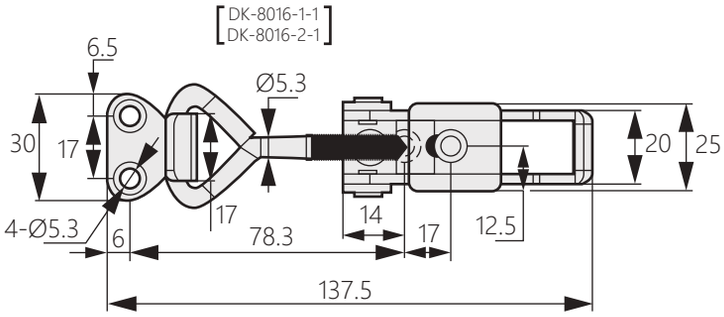

加掛鎖示意圖

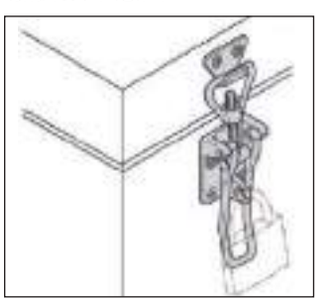

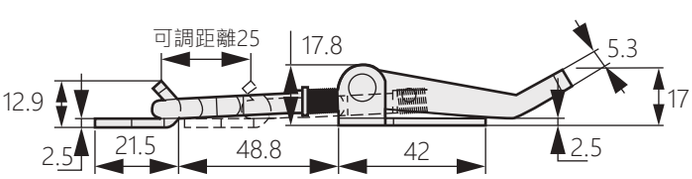

[DK-8016-1-2
DK-8016-2-2]

調節示意圖



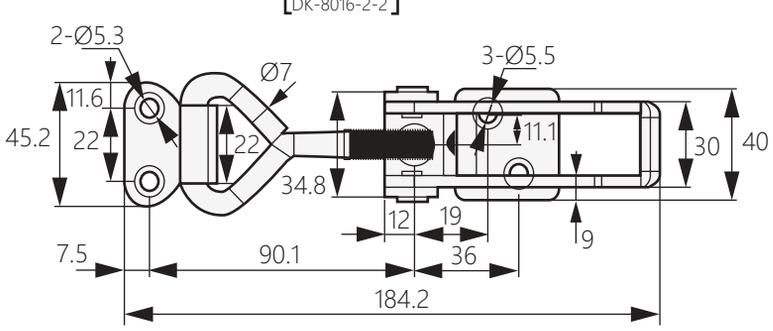

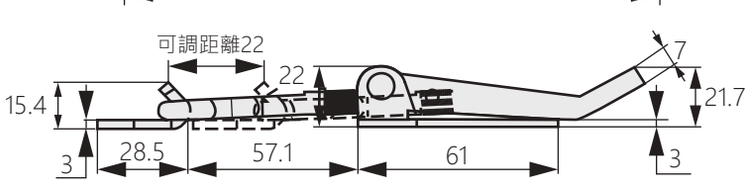

[DK-8016-1-3
DK-8016-2-3]

商品型號	材質
DK-8016-1-1	不鏽鋼
DK-8016-1-2	
DK-8016-1-3	
DK-8016-2-1	鐵
DK-8016-2-2	
DK-8016-2-3	

彈簧迫緊搭扣

Stainless Steel Spring Loaded Draw Latch

DK-120



商品介紹:

- ■外觀平滑不傷手，極佳美觀表面
- ■兩邊有彈簧，具有迫緊式功能
- ■可用銅掛鎖阻絕彈開可能性及增加安全性
- ■材質:不鏽鋼(SUS304)、鋼材(SPCC)
- ■表面處理:毛絲面、鍍鋅
- ■用途:震動設備
- ■備註:扣座鉤請參照搭扣座鉤

Product description:

- ■Smooth appearance without hurting hands
- ■Spring on both sides for forced function
- ■Copper padlocks can be used to block the possibility of pop-up and increase safety
- ■Material: Stainless steel (SUS304), steel (SPCC)
- ■Surface treatment: Wool surface, galvanized
- ■Uses: Vibration equipment
- ■Note: Please refer to the accessories for the relevant lock hooks.

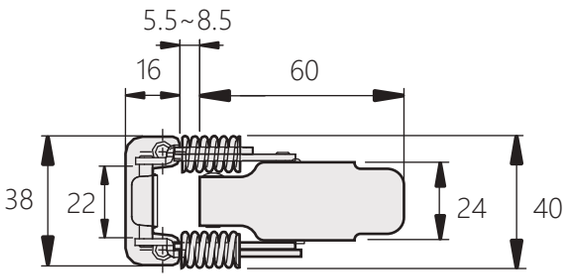

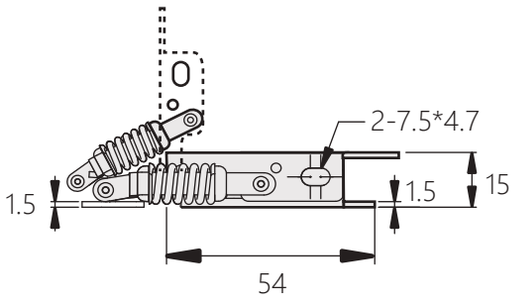

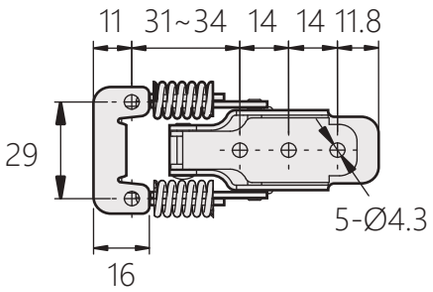

商品型號	樣式	材質	表面
DK-120-1	有孔固定型	304不鏽鋼	毛絲面
DK-120-2	有孔固定型	鋼材 (SPCC)	鍍鋅

商品型號	樣式	材質	表面	適用商品
DK-120-1-1	垂直鉤	不鏽鋼304	震動亮面	DK-120-1
DK-120-1-2	垂直鉤	鋼材(SPCC)	鍍鋅	DK-120-2
DK-120-2-1	垂直鉤	不鏽鋼304	震動亮面	DK-120-1
DK-120-2-2	垂直鉤	鋼材(SPCC)	鍍鋅	DK-120-2
DK-120-3-1	平面鉤	不鏽鋼304	震動亮面	DK-120-1
DK-120-3-2	平面鉤	鋼材(SPCC)	鍍鋅	DK-120-2
DK-120-4-1	平面鉤	不鏽鋼304	震動亮面	DK-120-1
DK-120-4-2	平面鉤	鋼材(SPCC)	鍍鋅	DK-120-2
DK-120-5-1	平面鉤	不鏽鋼304	震動亮面	DK-120-1
DK-120-5-2	平面鉤	鋼材(SPCC)	鍍鋅	DK-120-2

商品型號	拉伸距離 / 迫緊力 (1 kgf ≒ 10 N)				建議荷重 (kgf)	大小 L x W	鎖
	1mm	2mm	3mm	4mm			
DK-120-1	22	27	33	38	38	84.5x38	銅掛鎖孔
DK-120-2	28	36	41	47	47	84.5x38	銅掛鎖孔

安裝示意圖

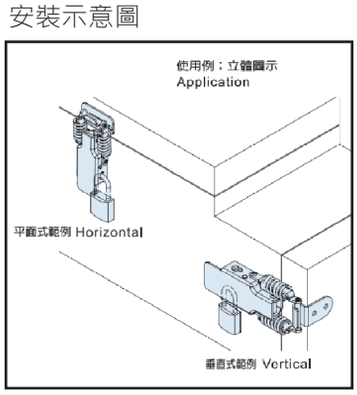

彈簧迫緊搭扣座鉤

Stainless steel double buckle

DK-120、DK-130

RoHS SUS不鏽鋼 CAD



[DK-120-1-1
DK-120-1-2
DK-130-1-1
DK-130-1-2]

垂直式長鉤



[DK-120-2-1
DK-120-2-2
DK-130-2-1
DK-130-2-2]

垂直式短鉤

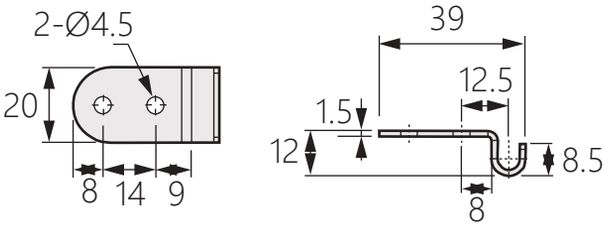



[DK-120-3-1
DK-120-3-2]

平面鉤



[DK-130-3-1
DK-130-3-2]

平面鉤

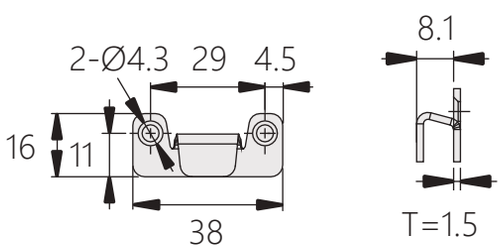



[DK-120-4-1
DK-120-4-2
DK-130-4-1
DK-130-4-2]

平面鉤



[DK-120-5-1
DK-120-5-2
DK-130-5-1
DK-130-5-2]

平面鉤

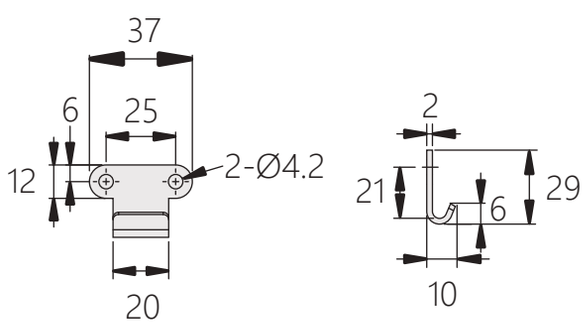

彈簧迫緊搭扣

Stainless Steel Spring Loaded Draw Latch

DK-130



商品介紹:

- ■外觀平滑不傷手，極佳美觀表面
- ■兩邊有彈簧，具有迫緊式功能
- ■可用銅掛鎖阻絕彈開可能性及增加安全性
- ■材質:不鏽鋼(SUS304)、鋼材(SPCC)
- ■表面處理:毛絲面、鍍鋅
- ■用途:震動設備
- ■備註:扣座鉤請參照搭扣座鉤

Product description:

- ■Smooth appearance without hurting hands
- ■Spring on both sides for forced function
- ■Copper padlocks can be used to block the possibility of pop-up and increase safety
- ■Material: Stainless steel (SUS304), steel (SPCC)
- ■Surface treatment: Wool surface, galvanized
- ■Uses: Vibration equipment
- ■Note: Please refer to the accessories for the relevant lock hooks.

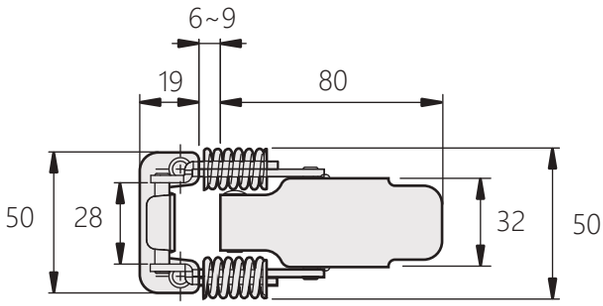

安裝示意圖

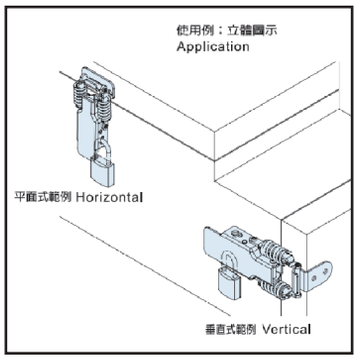

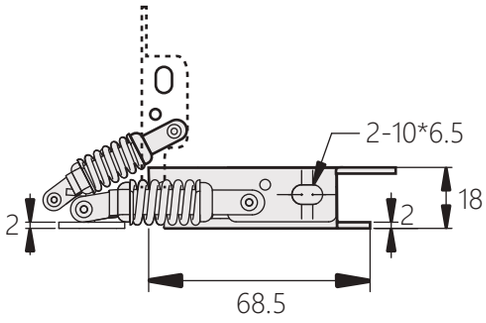

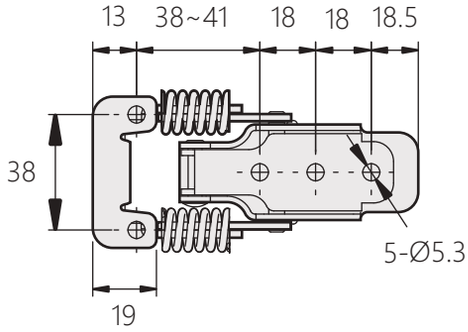

商品型號	樣式	材質	表面
DK-130-1	有孔固定型	304不鏽鋼	毛絲面
DK-130-2	有孔固定型	鋼材 (SPCC)	鍍鋅

商品型號	樣式	材質	表面	適用商品
DK-130-1-1	垂直鉤	不鏽鋼304	震動亮面	DK-130-1
DK-130-1-2	垂直鉤	鋼材(SPCC)	鍍鋅	DK-130-2
DK-130-2-1	垂直鉤	不鏽鋼304	震動亮面	DK-130-1
DK-130-2-2	垂直鉤	鋼材(SPCC)	鍍鋅	DK-130-2
DK-130-3-1	平面鉤	不鏽鋼304	震動亮面	DK-130-1
DK-130-3-2	平面鉤	鋼材(SPCC)	鍍鋅	DK-130-2
DK-130-4-1	平面鉤	不鏽鋼304	震動亮面	DK-130-1
DK-130-4-2	平面鉤	鋼材(SPCC)	鍍鋅	DK-130-2
DK-130-5-1	平面鉤	不鏽鋼304	震動亮面	DK-130-1
DK-130-5-2	平面鉤	鋼材(SPCC)	鍍鋅	DK-130-2

商品型號	拉伸距離 / 迫緊力 (1 kgf ≒ 10 N)				建議荷重 (kgf)	大小 L x W	鎖孔
	1mm	2mm	3mm	4mm			
DK-130-1	28	34	41	44	44	108x50	銅掛
DK-130-2	29	36	40	50	50	108x50	銅掛

不鏽鋼彈簧迫緊式搭扣 DK-110

Stainless Steel Spring Loaded Draw Latch



商品介紹:
- 外裝式彈簧設計可補償設計上或是震動所產生的間隙並迫緊物件。可提供穩定的鎖閉力道
- 材質:不鏽鋼 304
- 表面處理: 震動研磨

Product description:
- External spring loaded design compensates for tolerance and vibrations. Provides constant hold tension for secure latching
- Material: Stainless Steel 304
- Surface treatment: Vibration Grind

[DK-110-1]

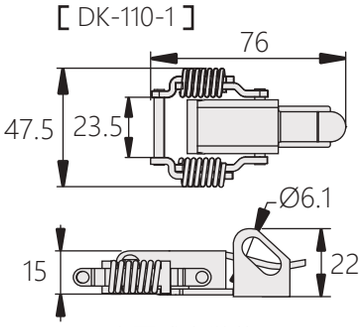

[DK-110-2]

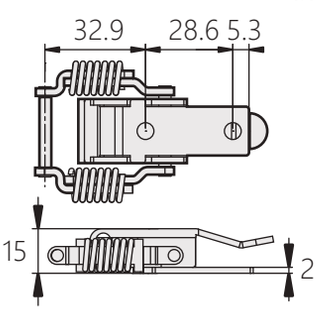

商品型號	掛鎖孔座規格	安裝扣座
DK-110-1-1	P附掛鎖孔	水平
DK-110-1-2	P附掛鎖孔	垂直
DK-110-2-1	無掛鎖孔	水平
DK-110-2-2	無掛鎖孔	垂直

水平式安裝鉤

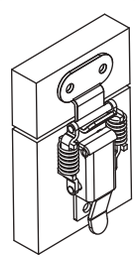

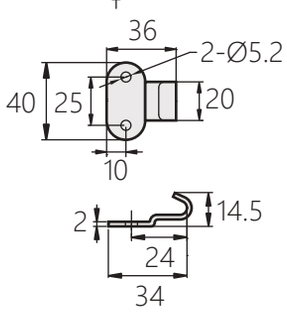

垂直式安裝鉤

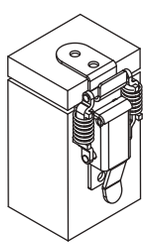

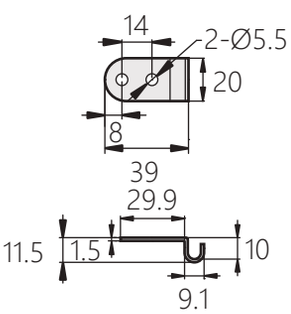

不鏽鋼彈簧迫緊式搭扣 DK-33

Stainless Steel Spring Loaded Draw Latch



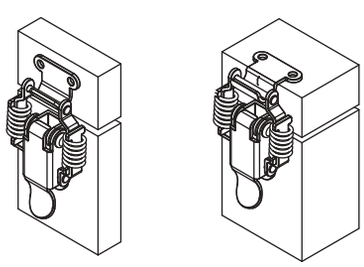

商品介紹:
- 外裝式彈簧設計可補償設計上或是震動所產生的間隙並迫緊物件，可提供穩定的鎖閉力道
- 材質:不鏽鋼 304
- 表面處理:震動研磨

Product description:
- External spring loaded design compensates for tolerance and vibrations，Provides constant hold tension for secure latching
- Material: Stainless Steel 304
- Surface treatment: Vibration Grind

[DK-33-1]

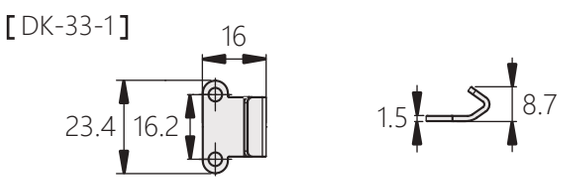

[DK-33-1]

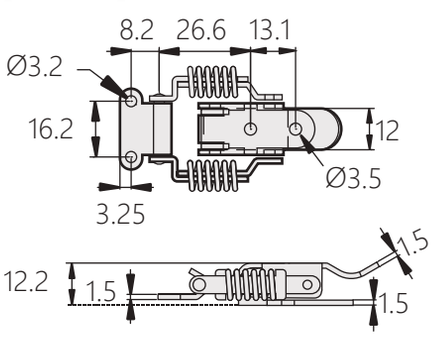

[DK-33-2]

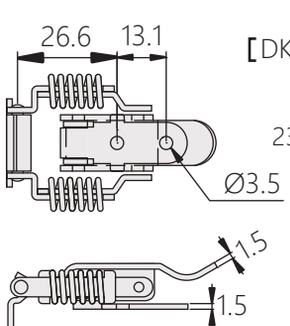

[DK-33-2]

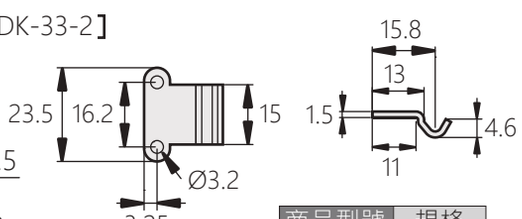

商品型號	規格
DK-33-1	水平
DK-33-2	垂直

彈簧迫緊式搭扣

Spring-loaded buckle

DK-323



商品介紹:

- ■可安裝於側門和平門
- ■帶彈簧結構，迫緊程度更強
- ■材質:不鏽鋼(SUS304)、鐵（SPCC）
- ■表面處理:震動研磨、鍍鎳
- ■用途:櫃門、電箱、電櫃及工業設備

Product description:

- ■Can be installed on side doors and flat doors
- ■With spring structure, stronger urgency
- ■Material: Stainless steel (SUS304), Iron (SPCC)
- ■Surface treatment: Vibration grinding, nickel plating
- ■Uses: Cabinet doors, electrical boxes, electrical cabinets and industrial equipment.

[DK-323-1-2]
[DK-323-2-2]

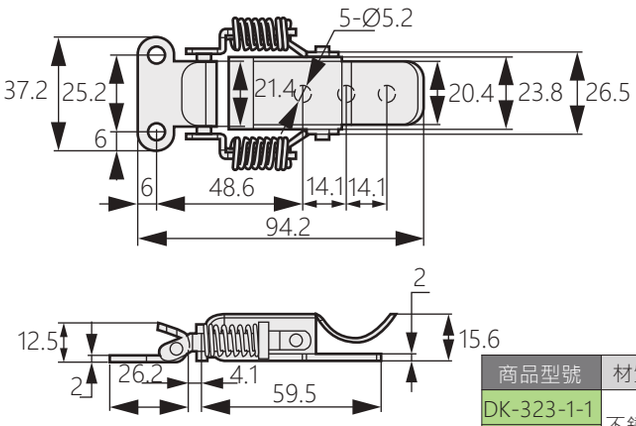

[DK-323-1-1]
[DK-323-2-1]

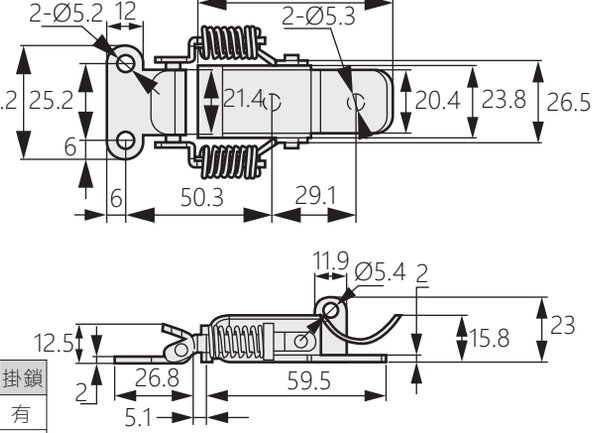

商品型號	材質	掛鎖
DK-323-1-1	不鏽鋼	有
DK-323-1-2		無
DK-323-2-1	鐵	有
DK-323-2-2		無

不鏽鋼迫緊搭扣

Stainless steel pressing buckle

DK-8023S-1



商品介紹:

- ■具有鎖定功能，關閉時可自動鎖定不鬆脫
- ■開啟時需要按下扣環
- ■材質:不鏽鋼(SUS304)
- ■表面處理:震動研磨
- ■用途:機箱機櫃、工業箱體、行業設備等

Product description:

- ■With lock function, it can be locked automatically when closed
- ■Need to press the buckle when opening
- ■Material: Stainless steel (SUS304)
- ■Surface treatment: Vibration grinding
- ■Uses: Chassis cabinets, industrial cabinets, industrial equipment, etc.

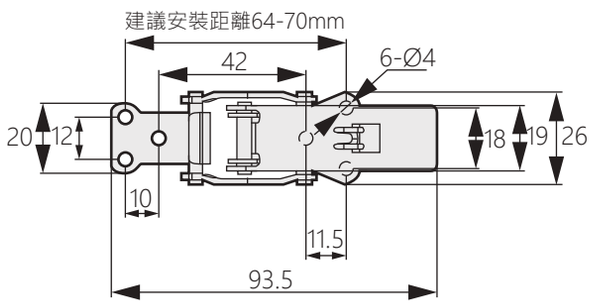

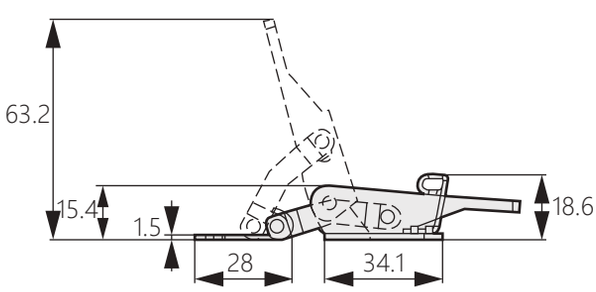

不鏽鋼彈簧迫緊式搭扣

Stainless Steel Spring Loaded Draw Latch

DK-3061



商品介紹:

- 外裝式彈簧設計可補償設計上或是震動所產生的間隙並迫緊物件可提供穩定的鎖閉力道
- 材質:不鏽鋼 304
- 表面處理:震動研磨

Product description:

- External spring loaded design compensates for tolerance and vibrations. Provides constant hold tension for secure latching.
- Material: Stainless Steel 304
- Surface treatment: Vibration Grind

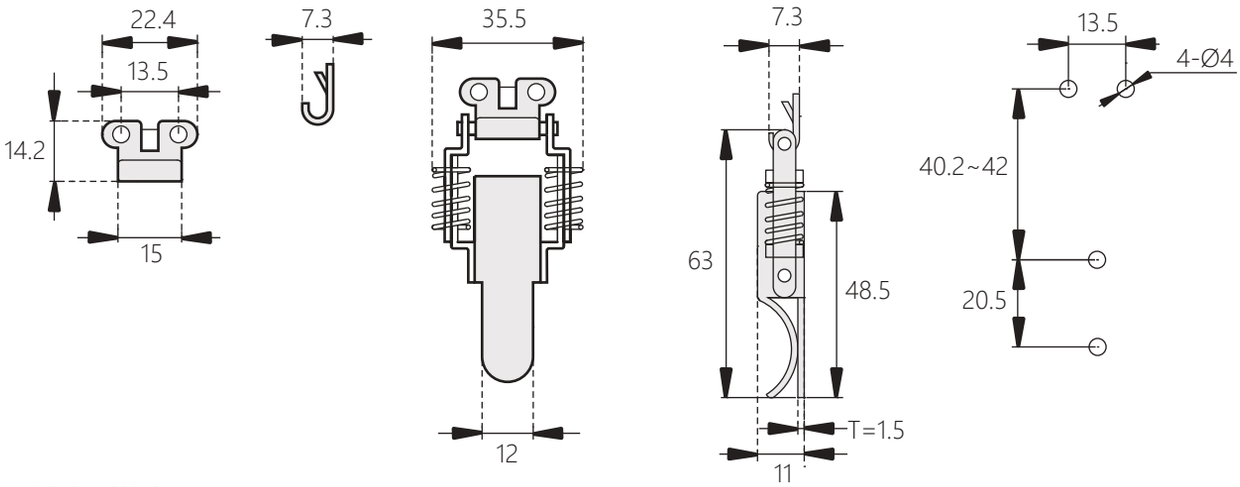

不鏽鋼搭扣

Stainless steel buckle

DK-3110



【DK-3110-1】 【DK-3110-2】

商品介紹:

- 材質:不鏽鋼 316
- 表面處理:震動研磨
- 適用:戶外物品之托吊、船舶用五金

Product description:

- Material: Stainless steel 316
- Surface treatment: Vibration grinding
- Applicable: Lifting of outdoor items, hardware for ships

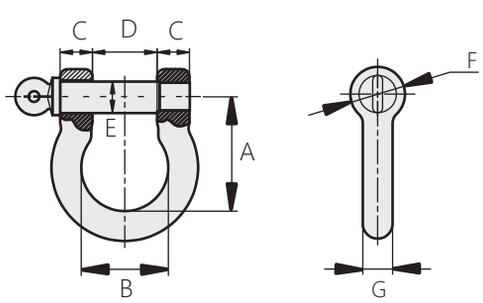

商品型號	A	D	B	C	F	G	E
DK-3110-1-1	46	26	26	13	22	12	12
DK-3110-1-2	38	22	22	10	17	10	10
DK-3110-1-3	30	17	17	9	15	8	8
DK-3110-1-4	22.5	13	13	6	13	6	6
DK-3110-1-5	19	11.5	11.5	5	10	5	5
DK-3110-2-1	46	26	35	13	22	12	12
DK-3110-2-2	38	22	28	10	17	10	10
DK-3110-2-3	30	17	22	9	15	8	8
DK-3110-2-4	22.5	13	16	6	13	6	6
DK-3110-2-5	19	11.5	14.5	5	10	5	5

不鏽鋼迫緊搭扣

DK-8026

Stainless steel pressing buckle



商品介紹:

- ■具有強力迫緊功能
- ■結構簡單易操作，扣緊面積大更牢固
- ■材質:不鏽鋼
- ■表面處理:鍍藍鋅
- ■用途:工業治具、箱體以及工業設備

Product description:

- ■With strong pressing function
- ■Simple structure and easy operation, large fastening area
- ■Material: Stainless steel (SUS304)
- ■Surface treatment: Vibration grinding
- ■Uses: Chassis cabinets, industrial cabinets, electrical boxes, electrical cabinets, etc.

[DK-8026-1-1]
[DK-8026-1-2]

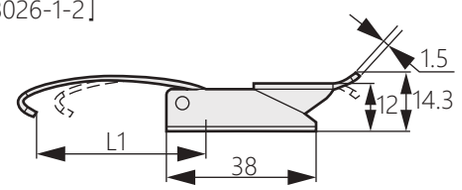

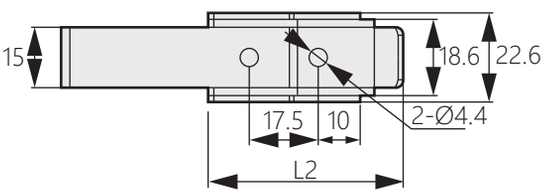

[DK-8026-1-3]
[DK-8026-2-1]
[DK-8026-2-1B]

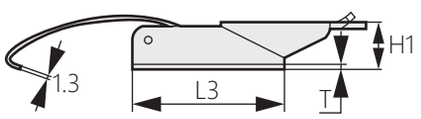

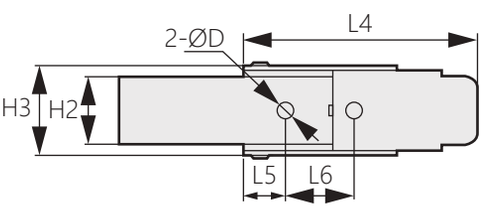

商品型號	L1	L2	L3	L4	L5	L6	H1	H2	H3	D	T
DK-8026-1-1	29.5	48.4									
DK-8026-1-2	42.1	46									
DK-8026-1-3			50.8	73	16	25.4	15.1	19.6	30.2	5.2	1.7
DK-8026-2-1			68	104	19	31	20	30.5	40	6.5	2
DK-8026-2-1B											

鎖扣

DK-8070

Lock



商品介紹:

- ■最大靜載荷:50KG
- ■表面處理:鏡光,拉絲
- ■材質:不鏽鋼304
- ■用途:箱櫃,廚具,酒店設備,工業設備等

Product description:

- ■Maximum static load: 50KG
- ■Surface treatment: Mirror light, brushed
- ■Material: Stainless steel (SUS304)
- ■Surface treatment: Vibration grinding
- ■Uses: Cabinets, kitchenware, hotel equipment, industrial equipment, etc.

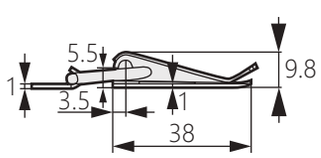

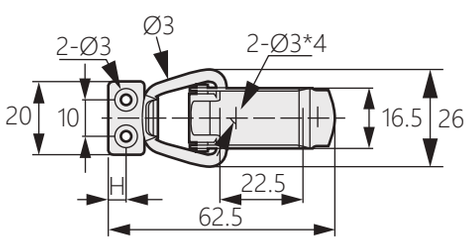

可調節扣件

DK-8028

Adjustable fastener



商品介紹:
- 具有強力迫緊功能
- 手柄部分配有鎖定按鈕，保證手柄不鬆脫
- 材質:鐵(SPCC)
- 表面處理:鍍彩鋅
- 用途:機箱機櫃、工業箱體、行業設備等

Product description:
- With strong pressing function
- The handle part is equipped with a lock button to ensure that the handle does not come loose
- Material: Iron (SPCC)
- Surface treatment: Color zinc plating
- Uses: Chassis cabinets, industrial cabinets, industrial equipment, etc.

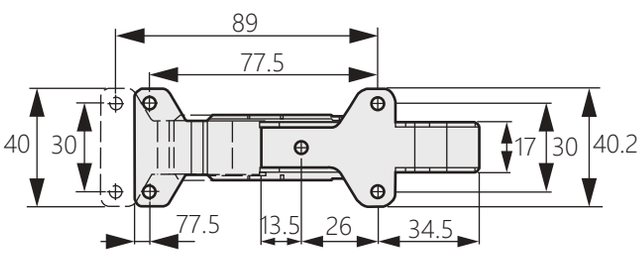

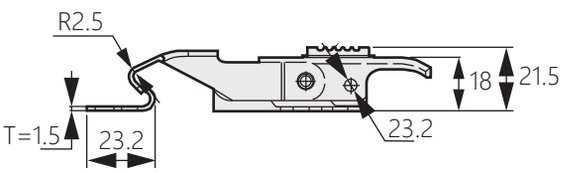

不鏽鋼平搭扣

DK-8050

Stainless steel flat buckle



商品介紹:
- 帶鎖可鎖定手柄
- 手柄開啟角度190度，迫緊點的調節量為10mm
- 材質:不鏽鋼（SUS304）
- 表面處理:震動研磨
- 用途:櫃門、電箱、電櫃、機械設備

Product description:
- Lockable lockable handle
- Material: Stainless steel (SUS304)
- Surface treatment: Vibration grinding
- Uses: Cabinet door, electric box, electric cabinet, machinery and equipment.

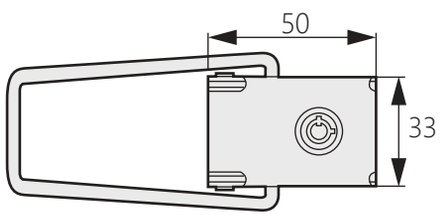

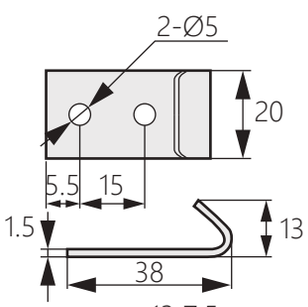

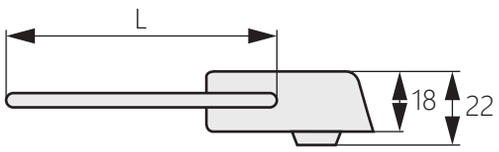

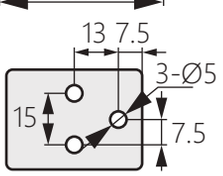

商品型號	L
DK-8050-1	57
DK-8050-2	93
DK-8050-3	130

平搭扣

Flat buckle

DK-8033



商品介紹:

- ■扣環弧形設計，結構牢固，迫緊性能強
- ■手柄處可加銷釘鎖定
- ■材質:不鏽鋼(SUS304)、鐵(SPCC)
- ■表面處理:震動研磨
- ■用途:櫃門、電箱、電櫃、機械設備

Product description:

- ■Buckle arc design, firm structure, strong pressing performance
- ■Pin lock at handle
- ■Material: Stainless steel (SUS304)、Iron(SPPC)
- ■Surface treatment: Vibration grinding
- ■Uses: Cabinet door, electric box, electric cabinet, machinery and equipment.

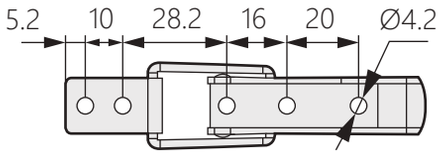

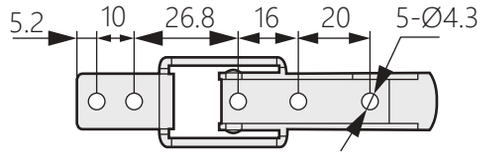

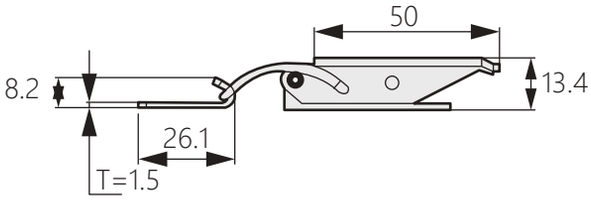

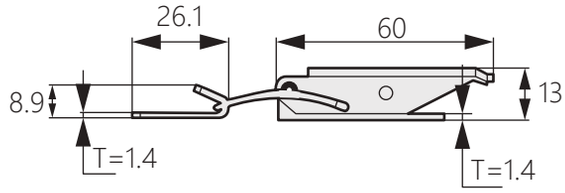

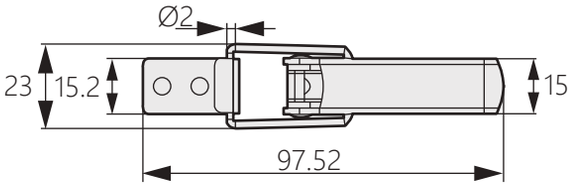

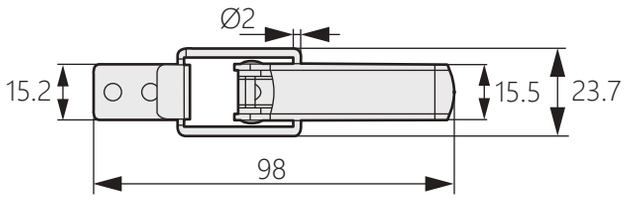

商品型號	材質
DK-8033-1	不鏽鋼
DK-8033-2	鐵

重型搭扣

DK-8051

Heavy buckle



商品介紹:

- ■重型搭扣，具有強大的迫緊功能
- ■材質:不鏽鋼、鐵(SPCC)
- ■表面處理:拉絲拋光、鍍藍鋅
- ■用途:工業箱體、機箱機櫃、大型結構件緊固用
- ■備註:最大規格產品需要雙手操作

Product description:

- ■Heavy-duty buckle with powerful pressing function
- ■Material: Stainless steel (SUS304), iron (SPCC)
- ■Surface treatment: Brushed and polished, blue zinc plated
- ■Uses: Chassis cabinets, industrial cabinets, industrial equipment, etc.
- ■Note: The largest product requires two hands

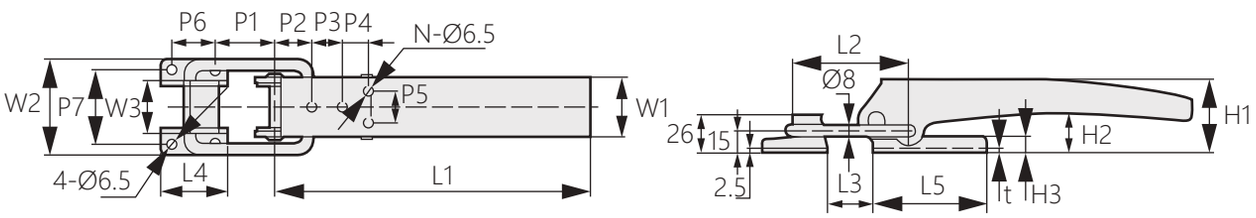

商品型號		L1	L2	L3	L4	L5	W1	W2	W3	H1	H2	H3	t	P1	P2	P3	P4	P5	P6	P7	N
不鏽鋼	冷軋板																				
DK-8051-1S	DK-8051-1A	215	80	29	45	79	40	66	35	50	36	11	3	40.5	25	30	20	20	30	52	4
DK-8051-2S	DK-8051-2A	165				64				45	23		2.5		20		30			50	3
DK-8051-3S	DK-8051-3A	115	62	11	35	49	30	55	25	38	21	13	2	22.5	15	20			20	40	2

鎖扣

DK-8066

Lock



商品介紹:

- ■材質:不鏽鋼304
- ■表面處理:鏡光,拉絲
- ■最大靜載荷:60KG
- ■用途:箱櫃,廚具,酒店設備,工業設備等

Product description:

- ■Material: Stainless Steel 304
- ■Surface treatment: Mirror Poloshing,drawbench
- ■MAX Load weight: 60kg
- ■Uses: Cabinet,Kitchen Equipment,Hotel Facilitrial, Industrial Equipment,etc.

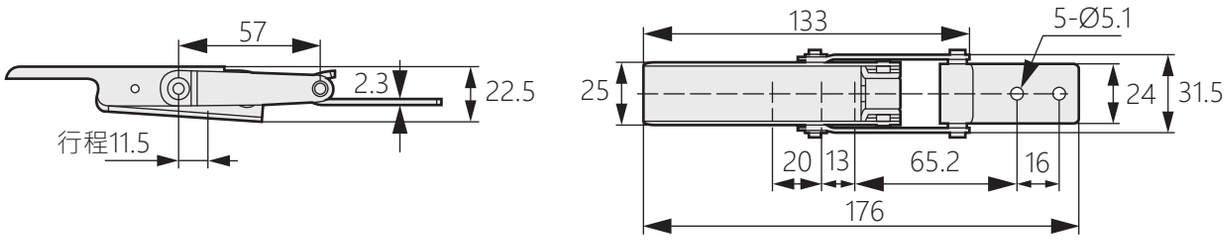

迫緊搭扣

Draw Latch

DK-8052



商品介紹:
- ■可加掛鎖，防止震動鬆脫
- ■材質:不鏽鋼(SUS304)
- ■表面處理:震動研磨
- ■用途:櫃門、電箱、電櫃
- ■備註:DK-8052-1 不配鉤座

Product description:
- ■Padlock can be added to prevent getting loose for vibration
- ■Material: Stainless steel (SUS304)
- ■Surface treatment: Vibration grinding
- ■Uses: Cabinet door, electric box, electric cabinet
- ■Note: DK-8052-1 without keeper base

[DK-8052-1]

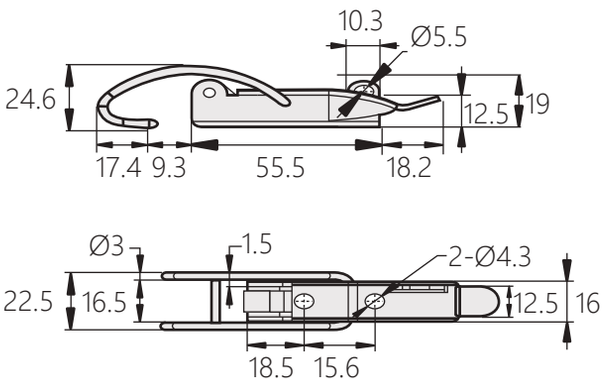

[DK-8052-2]

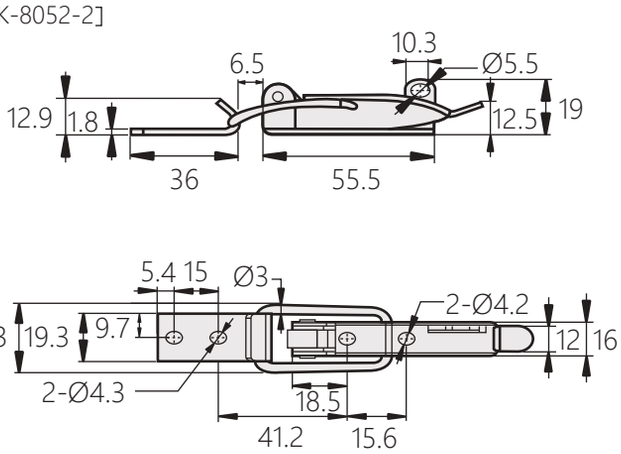

彈簧迫緊搭扣

Spring Draw Latch

DK-326



商品介紹:
- ■可安裝於側門和平門
- ■彎折式鉤子，增強鉤子強度
- ■帶彈簧結構，迫緊程度更強
- ■材質:不鏽鋼(SUS304)、鐵(SPCC)
- ■表面處理:震動研磨、鍍鎳
- ■用途:櫃門、電箱、電櫃

Product description:
- ■Suitable for side door and flat door installation
- ■Bended hook with strong force
- ■With spring structure, stronger compression force
- ■Material: Stainless steel 304 or spcc
- ■Surface treatment: Vibratory grinding or nickel plating
- ■Uses: Cabinet door, electric box, electric cabinet

商品型號	材質	表面處理
DK-326-1	不鏽鋼304	震動研磨
DK-326-2	鐵	鍍鎳

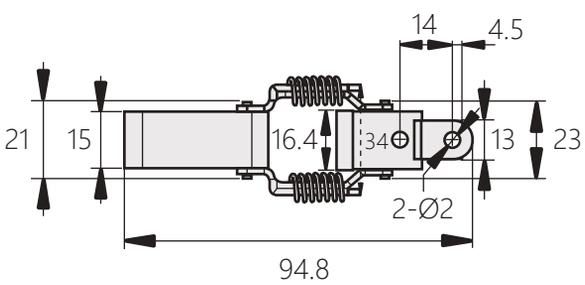

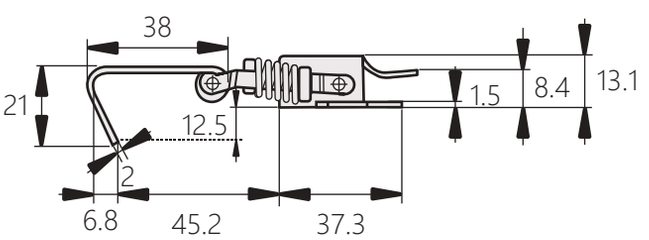

鎖扣 DK-8057

Lock



商品介紹:
- ■材質:不鏽鋼304
- ■表面處理:鏡光,拉絲
- ■最大靜載荷:50KG
- ■用途:箱櫃,廚具,酒店設備,工業設備等

Product description:
- ■Material: Stainless Steel 304
- ■Surface treatment: Mirror Poloshing,drawbench
- ■MAX Load weight: 50kg
- ■Uses: Cabinet,Kitchen Equipment,Hotel Facilitrial, Industrial Equipment,etc.

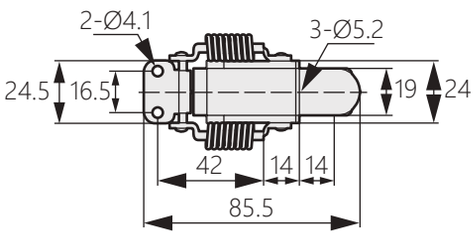

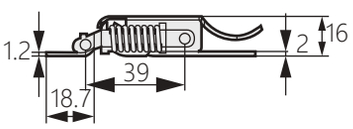

鎖扣 DK-8056

Lock



商品介紹:
- ■材質:不鏽鋼304
- ■表面處理:鏡光,拉絲
- ■最大靜載荷:50KG
- ■用途:箱櫃,廚具,酒店設備,工業設備等

Product description:
- ■Material: Stainless Steel 304
- ■Surface treatment: Mirror Poloshing,drawbench
- ■MAX Load weight: 50kg
- ■Uses: Cabinet,Kitchen Equipment,Hotel Facilitrial, Industrial Equipment,etc.

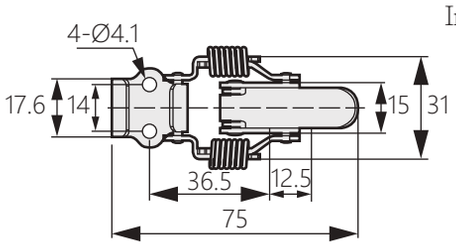

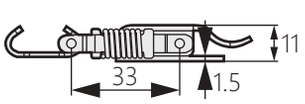

鎖扣 DK-8071

Lock



商品介紹:
- ■材質:不鏽鋼304
- ■表面處理:鏡光,拉絲
- ■最大靜載荷:50KG
- ■用途:箱櫃,廚具,酒店設備,工業設備等
- ■備註:訂製品

Product description:
- ■Material: Stainless Steel 304
- ■Surface treatment: Mirror Poloshing,drawbench
- ■MAX Load weight: 50kg
- ■Uses: Cabinet,Kitchen Equipment,Hotel Facilitrial, Industrial Equipment,etc.
- ■Notes: Order products

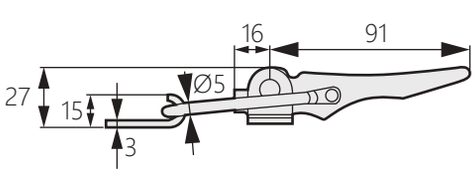

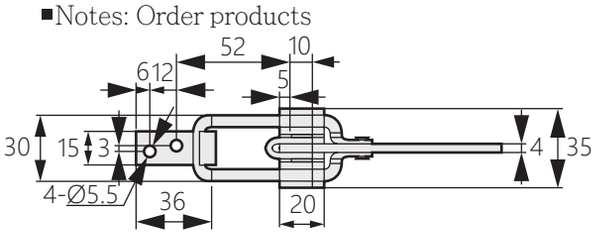

鎖扣 DK-8058

Lock



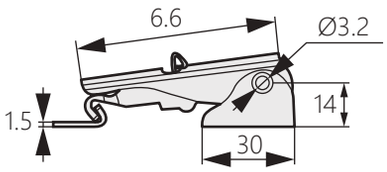

商品介紹:
- 材質:不鏽鋼304
- 表面處理:鏡光,拉絲
- 最大靜載荷:50KG
- 用途:箱櫃,廚具,酒店設備,工業設備等

Product description:
- Material: Stainless Steel 304
- Surface treatment: Mirror Poloshing,drawbench
- MAX Load weight: 50kg
- Uses: Cabinet,Kitchen Equipment,Hotel Facilitrial, Industrial Equipment,etc.

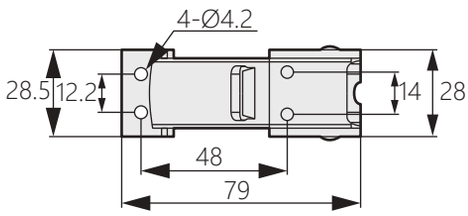

鎖扣 DK-8059

Lock



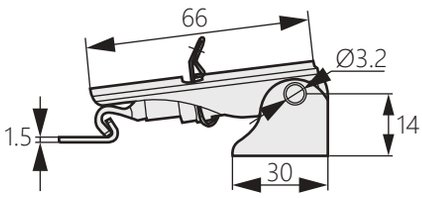

商品介紹:
- 材質:不鏽鋼304
- 表面處理:鏡光,拉絲
- 最大靜載荷:50KG
- 用途:箱櫃,廚具,酒店設備,工業設備等

Product description:
- Material: Stainless Steel 304
- Surface treatment: Mirror Poloshing,drawbench
- MAX Load weight: 50kg
- Uses: Cabinet,Kitchen Equipment,Hotel Facilitrial, Industrial Equipment,etc.

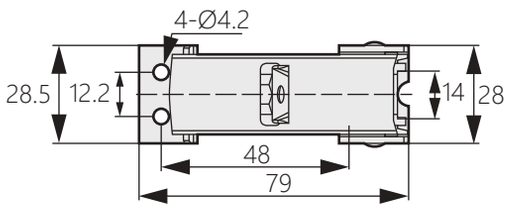

鎖扣 DK-8060-1

Lock



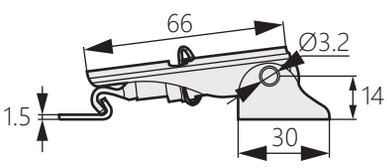

商品介紹:
- 材質:不鏽鋼304
- 表面處理:鏡光,拉絲
- 最大靜載荷:50KG
- 用途:箱櫃,廚具,酒店設備,工業設備等

Product description:
- Material: Stainless Steel 304
- Surface treatment: Mirror Poloshing,drawbench
- MAX Load weight: 50kg
- Uses: Cabinet,Kitchen Equipment,Hotel Facilitrial, Industrial Equipment,etc.

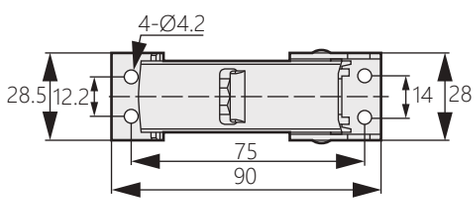

鎖扣 DK-8060-2

Lock



商品介紹:
- ■材質:不鏽鋼304
- ■表面處理:鏡光,拉絲
- ■最大靜載荷:50KG
- ■用途:箱櫃,廚具,酒店設備,工業設備等

Product description:
- ■Material: Stainless Steel 304
- ■Surface treatment: Mirror Poloshing,drawbench
- ■MAX Load weight: 50kg
- ■Uses: Cabinet,Kitchen Equipment,Hotel Facilitrial, Industrial Equipment,etc.

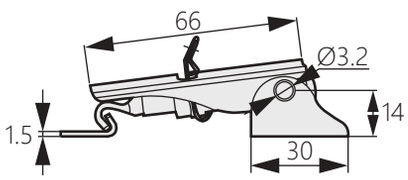

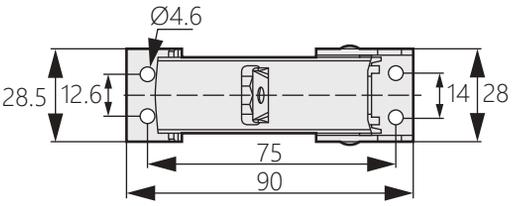

鎖扣 DK-8062

Lock



商品介紹:
- ■材質:不鏽鋼304
- ■表面處理:鏡光,拉絲
- ■最大靜載荷:50KG
- ■用途:箱櫃,廚具,酒店設備,工業設備等

Product description:
- ■Material: Stainless Steel 304
- ■Surface treatment: Mirror Poloshing,drawbench
- ■MAX Load weight: 50kg
- ■Uses: Cabinet,Kitchen Equipment,Hotel Facilitrial, Industrial Equipment,etc.

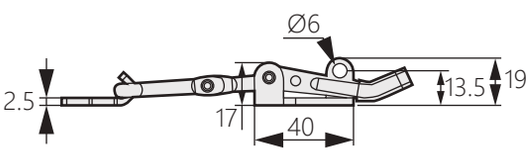

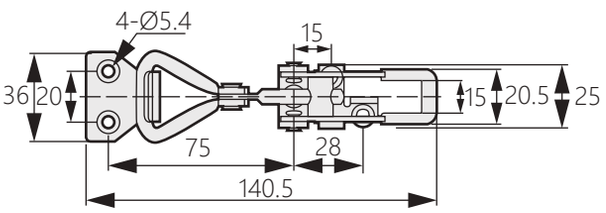

鎖扣 DK-8061

Lock



商品介紹:
- ■材質:不鏽鋼304
- ■表面處理:鏡光,拉絲
- ■最大靜載荷:50KG
- ■用途:箱櫃,廚具,酒店設備,工業設備等

Product description:
- ■Material: Stainless Steel 304
- ■Surface treatment: Mirror Poloshing,drawbench
- ■MAX Load weight: 50kg
- ■Uses: Cabinet,Kitchen Equipment,Hotel Facilitrial, Industrial Equipment,etc.

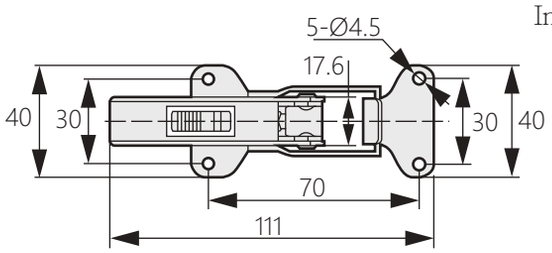

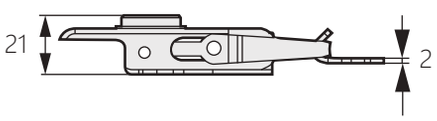

鎖扣 DK-8068

Lock



商品介紹:
- 材質:不鏽鋼304
- 表面處理:鏡光,拉絲
- 最大靜載荷:50KG
- 用途:箱櫃,廚具,酒店設備,工業設備等
- 備註:訂製品

Product description:
- Material: Stainless Steel 304
- Surface treatment: Mirror Poloshing,drawbench
- MAX Load weight: 50kg
- Uses: Cabinet,Kitchen Equipment,Hotel Facilitrial, Industrial Equipment,etc.
- Notes: Order products

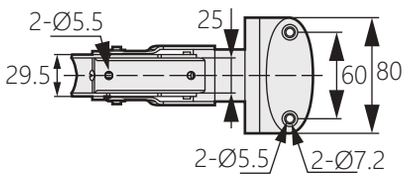

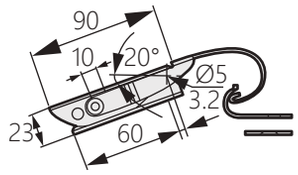

鎖扣 DK-8072

Lock



商品介紹:
- 材質:不鏽鋼304
- 表面處理:鏡光,拉絲
- 最大靜載荷:80KG
- 用途:箱櫃,廚具,酒店設備,工業設備等

Product description:
- Material: Stainless Steel 304
- Surface treatment: Mirror Poloshing,drawbench
- MAX Load weight: 80kg
- Uses: Cabinet,Kitchen Equipment,Hotel Facilitrial, Industrial Equipment,etc.

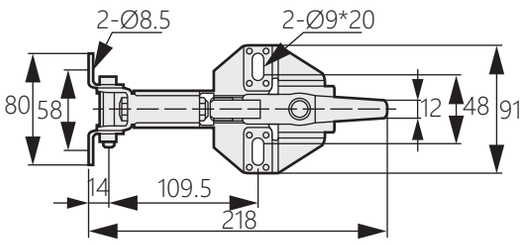

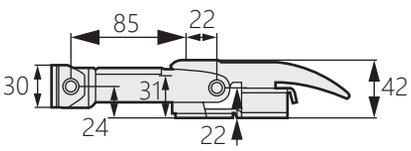

鎖扣 DK-8069

Lock



商品介紹:
- 材質:不鏽鋼304
- 表面處理:鏡光,拉絲
- 最大靜載荷:50KG
- 用途:箱櫃,廚具,酒店設備,工業設備等

Product description:
- Material: Stainless Steel 304
- Surface treatment: Mirror Poloshing,drawbench
- MAX Load weight: 50kg
- Uses: Cabinet,Kitchen Equipment,Hotel Facilitrial, Industrial Equipment,etc.

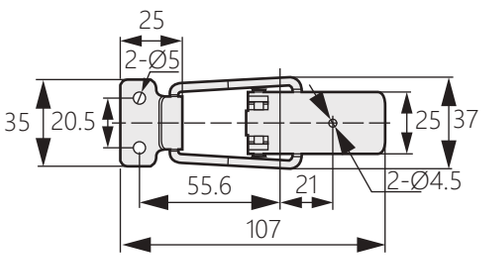

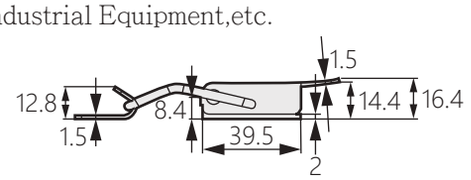

Casters&Leveling feet JZ
腳輪&腳座

Caster&Leveling feet JZ
腳輪&腳座

Caster&Leveling feet JZ
腳輪&腳座

Caster&Leveling feet JZ
腳輪&腳座

Caster&Leveling feet JZ
腳輪&腳座

尼龍萬向調整腳

JZ-001

Nylon universal adjustment foot



商品介紹:
- ■一體成型射出尼龍底座
- ■底座均有壁虎孔
- ■螺牙材質:不鏽鋼,鐵

Product description:
- ■Integrated one piece PA Base
- ■Gecko holes in the base
- ■Screw material: Stainless steel, Iron

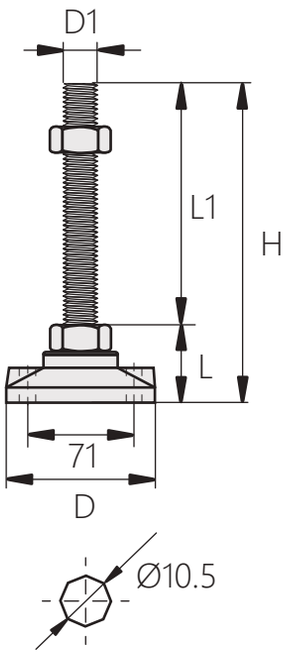

商品型號	材質	D	L	D1	牙距	L1	H	荷重(KG)
JZ-001-1-1	不鏽鋼	100	45	M16	P2.0	100	145	600
JZ-001-1-2		100	45	M16	P2.0	150	195	600
JZ-001-1-3		100	45	M16	P2.0	200	245	600
JZ-001-1-4		100	48	M20	P2.5	100	148	800
JZ-001-1-5		100	48	M20	P2.5	150	198	800
JZ-001-1-6		100	48	M20	P2.5	200	248	800
JZ-001-1-7		125	50	M24	P3.0	150	200	900
JZ-001-2-1	鍍鋅	100	45	M16	P2.0	100	145	600
JZ-001-2-2		100	45	M16	P2.0	150	195	600
JZ-001-2-3		100	45	M16	P2.0	200	245	600
JZ-001-2-4		100	45	M16	P2.0	250	295	600
JZ-001-2-5		100	48	M20	P2.5	100	148	800
JZ-001-2-6		100	48	M20	P2.5	150	198	800
JZ-001-2-7		100	48	M20	P2.5	200	248	800

重力型腳架

JZ-015

Gravity tripod



商品介紹:
- ■Ø20壁虎孔
- ■螺牙材質:鐵
- ■表面處理:鍍鋅

Product description:
- ■Ø20 Anchor Bolt Hole
- ■Screw material: Iron
- ■Surface treatment: Zinc plating

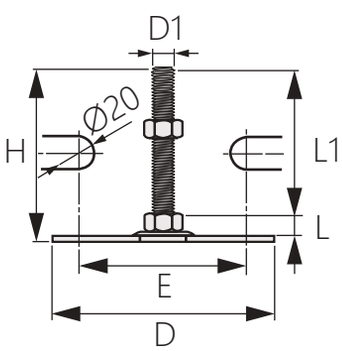

商品型號	材質	D	L	D1	牙距	L1	H	荷重 (KG)	偏芯距
JZ-015-1	鍍鋅	200*100	19	M16	P2.0	100	119	500	75
JZ-015-2		200*100	19	M16	P2.0	150	169	500	75
JZ-015-3		200*100	19	M20	P2.5	100	119	800	75
JZ-015-4		200*100	19	M20	P2.5	150	169	800	75
JZ-015-5		200*100	19	M24	P3.0	100	119	1000	75
JZ-015-6		200*100	19	M24	P3.0	150	169	1000	75

水平調節重型腳座 JZ-135

Leveling Foot



商品介紹:

- 採用不鏽鋼鑄造一體成型，承重性能好
- 底部有防滑防震橡膠
- 材質:不鏽鋼(SUS304)
- 表面處理:鏡面拋光
- 用途:半導體設備、醫療設備、機床、售貨機、食品加工設備

Product description:

- Molding in one stainless steel casting with strong load-bearing performance
- Non-slip anti-vibration rubber in the bottom
- Material: Stainless steel (SUS304)
- Surface treatment: Mirror polishing
- Uses: Semiconductor equipment, medical equipment, machine tools, vending machines,Food processing equipment

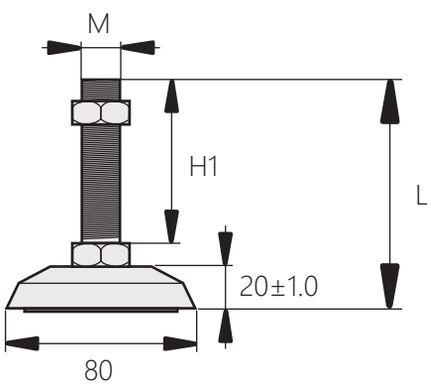

商品型號	M	L	H1	荷重
JZ-135-1	M16	78	50	500KG
JZ-135-2		128	100	
JZ-135-3	M18	130	100	800KG
JZ-135-4		160	130	
JZ-135-5	M20	130	100	1000KG
JZ-135-6		160	130	

塑鋼水平調整腳架 JZ-002

Nylon Base Level Adjuster



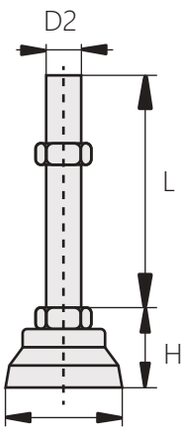

商品介紹:

- 材質:底座 - 尼龍、螺柱 - 鐵、不鏽鋼
- 用途:自動化設備、食品機械、鋁擠型、PCB設備

Product description:

- Material : Base-Nylon ; Screw-Steel Or Stainless Steel
- Uses: Automation equipment, food machinery, aluminum extrusion, PCB equipment

商品型號	材質	L	D1	D2	H	荷重
JZ-002-1-1	不鏽鋼	100	65	M16	42	600KG
JZ-002-1-2		150				
JZ-002-1-3		100		M20	46	800KG
JZ-002-1-4		150				
JZ-002-1-5		50		M16	42	600KG
JZ-002-2-1	鐵	100				
JZ-002-2-2		150				
JZ-002-2-3		200				
JZ-002-2-4		250				
JZ-002-2-5		75		M20	46	800KG
JZ-002-2-6		100				
JZ-002-2-7		150				
JZ-002-2-8		200				
JZ-002-2-9		250				
JZ-002-2-10		100		5/8"	43	600KG
JZ-002-2-11		150				
JZ-002-2-12		100		3/4"	45	800KG
JZ-002-2-13		150				

尼龍萬向調整腳

JZ-1003

Nylon universal adjustment foot



商品介紹:
- ■一體成型射出尼龍底座
- ■Ø80~Ø100底座均有壁虎孔
- ■螺牙材質:不鏽鋼

Product description:
- ■Integrated one piece PA Base
- ■Ø80 ~ Ø100 bases have gecko holes
- ■Screw material: Stainless steel

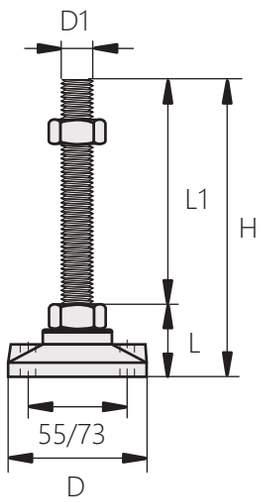

商品型號	材質	D	L	D1	牙距	L1	H	荷重 (KG)
JZ-1003-1	不鏽鋼	50	35	M10	P1.5	50	85	200
JZ-1003-2		60	50	M16	P2.0	100	150	300
JZ-1003-3		60	50	M16	P2.0	150	200	300
JZ-1003-4		60	50	M20	P2.5	150	200	500
JZ-1003-5		80	50	M12	P1.75	100	150	200
JZ-1003-6		80	50	M16	P2.0	100	150	300
JZ-1003-7		80	50	M16	P2.0	150	200	300
JZ-1003-8		80	50	M20	P2.5	150	200	500
JZ-1003-9		100	50	M16	P2.0	100	150	300
JZ-1003-10		100	50	M16	P2.0	150	200	300
JZ-1003-11		100	50	M20	P2.5	150	200	500

尼龍萬向調整腳

JZ-003

Nylon universal adjustment foot



商品介紹:
- ■一體成型射出尼龍底座
- ■Ø80~Ø100底座均有壁虎孔
- ■螺牙材質:鐵

Product description:
- ■Integrated one piece PA Base
- ■Ø80 ~ Ø100 bases have gecko holes
- ■Screw material: Iron

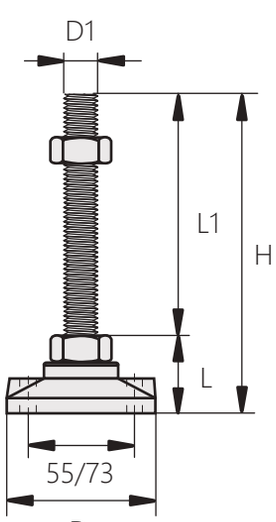

商品型號	材質	D	L	D1	牙距	L1	H	荷重 (KG)
JZ-003-1	鍍鋅	60	50	M16	P2.0	100	150	300
JZ-003-2		60	50	M16	P2.0	150	200	300
JZ-003-3		60	50	M20	P2.5	100	150	500
JZ-003-4		60	50	M20	P2.5	150	200	500
JZ-003-5		80	50	M16	P2.0	100	150	300
JZ-003-6		80	50	M16	P2.0	150	200	300
JZ-003-7		80	50	M20	P2.5	100	150	500
JZ-003-8		80	50	M20	P2.5	150	200	500
JZ-003-9		100	50	M16	P2.0	100	150	300
JZ-003-10		100	50	M16	P2.0	150	200	300
JZ-003-11		100	50	M20	P2.5	100	150	500
JZ-003-12		100	50	M20	P2.5	150	200	500

防滑調整腳架

Non-slip adjustment stand

JZ-004



商品介紹:

- 底部防滑橡膠墊具有減震
- 螺牙材質:不鏽鋼,鐵
- 表面處理:鍍鋅

Product description:

- Anti-Slip Shock Absorbing Rubber Pad
- Screw material: Stainless steel, Iron
- Surface treatment: Zinc plating

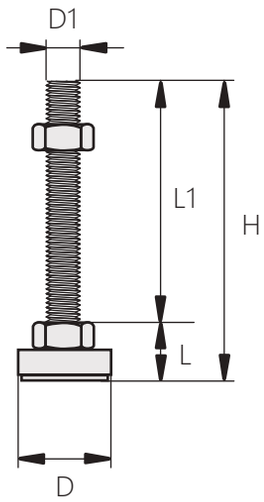

商品型號	材質	D	L	D1	牙距	L1	H	荷重(KG)
JZ-004-1-1	不鏽鋼	40	21	M10	P1.5	50	71	200
JZ-004-1-2		40	21	M10	P1.5	100	121	200
JZ-004-1-3		40	23	M12	P1.75	50	73	300
JZ-004-1-4		40	23	M12	P1.75	100	123	300
JZ-004-1-5		40	23	M12	P1.75	150	173	300
JZ-004-1-6		60	30	M12	P1.75	50	80	300
JZ-004-1-7		60	30	M12	P1.75	100	130	300
JZ-004-1-8		60	30	M12	P1.75	150	180	300
JZ-004-1-9		60	32	M16	P2.0	100	132	400
JZ-004-1-10		60	32	M16	P2.0	150	182	400
JZ-004-2-1	鍍鋅	40	21	M10	P1.5	50	71	200
JZ-004-2-2		40	21	M10	P1.5	100	121	200
JZ-004-2-3		60	30	M12	P1.75	75	105	300
JZ-004-2-4		60	30	M12	P1.75	100	130	300
JZ-004-2-5		60	30	M12	P1.75	150	180	300
JZ-004-2-6		60	32	M16	P2.0	100	132	400
JZ-004-2-7		60	32	M16	P2.0	150	182	400
JZ-004-2-8		80	35	M20	P2.5	100	135	500
JZ-004-2-9		55	30	M16	P2.0	200	230	400
JZ-004-2-10		80	35	M20	P2.5	150	185	500

避震橡膠腳架

Suspension rubber feet

JZ-011



商品介紹:
- ■一體成型橡膠底座
- ■避震效果佳
- ■螺牙材質:不鏽鋼,鐵
- ■備註:可訂製M24,M30,M36規格,敬請洽詢

Product description:
- ■Integrated one piece rubber base
- ■Excellent vibration resistance
- ■Screw material: Stainless steel, Iron
- ■Note: M24, M30, M36 specifications can be customized, please contact.

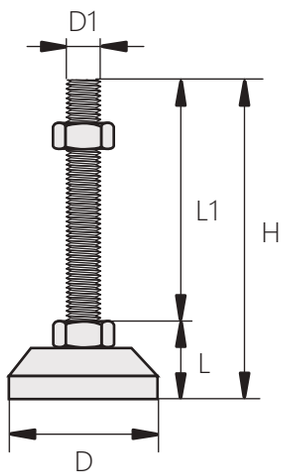

商品型號	材質	D	L	D1	牙距	L1	H	荷重 (KG)
JZ-011-1-1	不鏽鋼	70	50	M16	P2.0	100	150	300
JZ-011-1-2		70	50	M16	P2.0	150	200	300
JZ-011-1-3		70	42	M16		100	142	600
JZ-011-1-4		70	42	M16		150	192	600
JZ-011-1-5		70	53	M20	P2.5	100	153	300
JZ-011-1-6		70	53	M20	P2.5	150	203	300
JZ-011-1-7		70	46	M20		100	146	800
JZ-011-1-8		70	46	M20		150	196	800
JZ-011-1-9		90	44	M16	P2.0	100	144	300
JZ-011-1-10		90	44	M16	P2.0	150	194	300
JZ-011-1-11		90	47	M20	P2.5	100	147	300
JZ-011-1-12		90	47	M20	P2.5	150	197	300
JZ-011-2-1	鍍鋅	70	50	M16	P2.0	100	150	300
JZ-011-2-2		70	50	M16	P2.0	150	200	300
JZ-011-2-3		70	50	M16	P2.0	200	250	300
JZ-011-2-4		70	42	M16		100	142	600
JZ-011-2-5		70	42	M16		150	192	600
JZ-011-2-6		70	42	M16		200	242	600
JZ-011-2-7		70	42	M16		250	292	600
JZ-011-2-8		90	44	M16	P2.0	100	144	300
JZ-011-2-9		90	44	M16	P2.0	150	194	300
JZ-011-2-10		70	53	M20	P2.5	100	153	300
JZ-011-2-11		70	53	M20	P2.5	150	203	300
JZ-011-2-12		70	53	M20	P2.5	200	253	300
JZ-011-2-13		70	46	M20		75	121	800
JZ-011-2-14		70	46	M20		100	146	800
JZ-011-2-15		70	46	M20		150	196	800
JZ-011-2-16		70	46	M20		200	246	800
JZ-011-2-17		70	46	M20		250	296	800
JZ-011-2-18		70	43	5/8"		100	143	600
JZ-011-2-19		70	43	5/8"		150	193	600
JZ-011-2-20		70	45	3/4"		100	145	800
JZ-011-2-21		70	45	3/4"		150	195	800
JZ-011-2-22		90	47	M20	P2.5	100	147	300
JZ-011-2-23		90	47	M20	P2.5	150	197	300
JZ-011-2-24		90	47	M20	P2.5	200	247	300

小型水平調整腳座

JZ-35

Small level adjustment foot



商品介紹:

- ■材質:底盤-鐵+TPR、螺柱-鐵
- ■表面處理:底盤-鍍鉻、螺柱-鍍鋅

Product description:

- ■Material: Chassis - iron + TPR、 stud - iron
- ■Surface treatment: Chassis - chrome, stud - galvanized

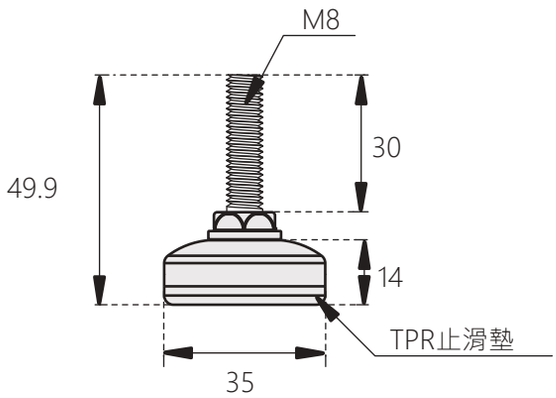

重型調整腳架

JZ-1505

Heavy Adjustment Tripod



商品介紹:

- ■一體成形不鏽鋼底座
- ■螺牙材質:不鏽鋼,鐵
- ■表面處理:拋光處理,鍍鋅

Product description:

- ■Integrated one piece Stainless(Nickel)Base
- ■Screw material: Stainless steel, Iron
- ■Surface treatment: Polishing treatment, Zinc plating

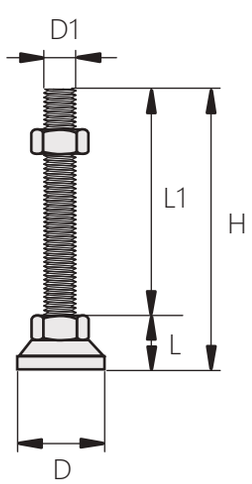

商品型號	材質	D	L	D1	牙距	L1	H	荷重 (KG)
JZ-1505-1-1	不鏽鋼	50	32	M16	P2.0	100	132	1500
JZ-1505-1-2		50	32	M16	P2.0	150	182	1500
JZ-1505-1-3		70	34	M16	P2.0	100	134	1500
JZ-1505-1-4		70	34	M16	P2.0	150	184	1500
JZ-1505-1-5		70	36	M20	P2.5	100	136	2000
JZ-1505-1-6		70	36	M20	P2.5	150	186	2000
JZ-1505-1-7		70	36	M20	P2.5	200	236	2000
JZ-1505-2-1	鍍鋅	60	30	M16	P2.0	100	130	1500
JZ-1505-2-2		60	30	M16	P2.0	150	180	1500
JZ-1505-2-3		60	30	M16	P2.0	200	230	1500
JZ-1505-2-4		60	33	M20	P2.5	100	133	2000
JZ-1505-2-5		60	33	M20	P2.5	150	183	2000
JZ-1505-2-6		60	33	M20	P2.5	200	233	2000
JZ-1505-2-7		60	35	M24	P3.0	100	135	2200
JZ-1505-2-8		60	35	M24	P3.0	150	185	2200

水平調節腳座 JZ-080

Leveling Foot



商品介紹:

- 接觸面積大，並配有橡膠膠墊，防滑防震性能優良
- 材質:鐵、不鏽鋼、尼龍
- 表面處理:鐵-鍍白鋅、不鏽鋼-震動研磨
- 用途:半導體設備、醫療設備、機床等

Product description:

- Large touching area, with rubber feet gasket, excellent non-slip and anti-vibration performance
- Material: Iron, stainless steel, nylon
- Surface treatment: Iron-White zinc plated、Stainless steel-Vibration grinding
- Uses: Semiconductor equipment, medical equipment, machine tools

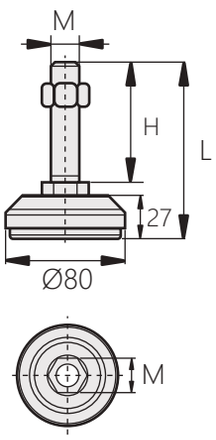

商品型號		M	L	W	H	荷重
不鏽鋼	鐵					
JZ-080-1-1	JZ-080-2-1	M16	88	24	50	150KG
JZ-080-1-2	JZ-080-2-2		143		100	
JZ-080-1-3	JZ-080-2-3	M20	143	30	100	200KG
JZ-080-1-4	JZ-080-2-4		193		150	

安裝方式

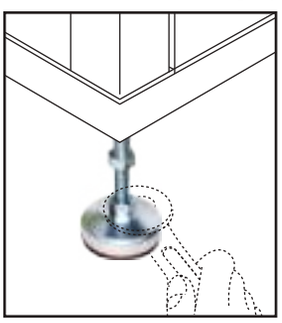

水平調節腳座 JZ-081

Leveling Foot



商品介紹:

- 接觸面積大，並配有橡膠膠墊，防滑防震性能優良
- 材質:鐵、不鏽鋼、橡膠
- 表面處理:鐵-鍍白鋅、不鏽鋼-震動研磨
- 用途:半導體設備、醫療設備、機床等

Product description:

- Large touching area, with rubber feet gasket, excellent non-slip and anti-vibration performance
- Material: Iron, stainless steel, rubber
- Surface treatment: Iron-White zinc plated、Stainless steel-Vibration grinding
- Uses: Semiconductor equipment, medical equipment, machine tools

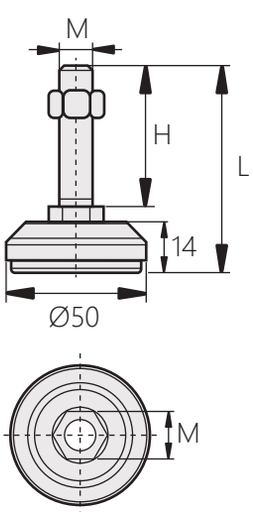

商品型號		M	L	W	H	荷重
不鏽鋼	鐵					
JZ-081-1-1	JZ-081-2-1	M8	54	17	30	80KG
JZ-081-1-2	JZ-081-2-2		74		50	
JZ-081-1-3	JZ-081-2-3	M10	74		50	100KG
JZ-081-1-4	JZ-081-2-4		104		80	
JZ-081-1-5	JZ-081-2-5	M12	74		50	120KG
JZ-081-1-6	JZ-081-2-6		124		100	

安裝方式

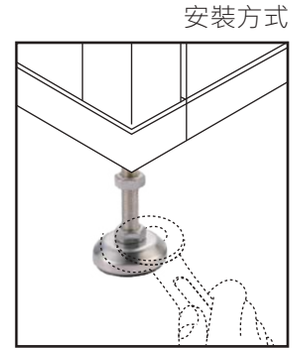

重型防震腳座

JZ-082

Heavy Shockproof Foot



底部崁入防滑防震橡膠

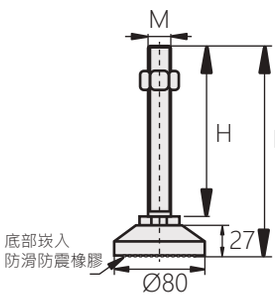

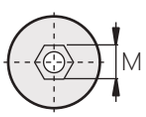

安裝方式

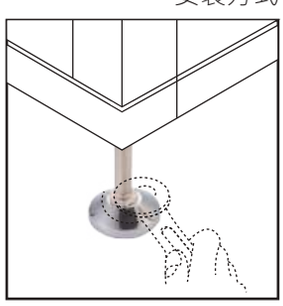

商品介紹:

- 採用鑄鋼材質，承重性能優良
- 接觸面積大，並配有橡膠膠墊，防滑防震性能優良
- 材質:不鏽鋼、鑄鋼、防震橡膠
- 表面處理:鍍亮鉻
- 用途:半導體設備、醫療設備、工業自動化設備等

Product description:

- Made of cast steel, excellent load-bearing performance
- Large contact area and rubber pad for excellent anti-skid and shock resistance
- Material: Stainless steel, cast steel, anti-vibration rubber
- Surface treatment: Bright chrome plating
- Uses: Semiconductor equipment, medical equipment, industrial automation equipment, etc.

商品型號		M	L	W	H	荷重
不鏽鋼	鑄鋼					
JZ-082-1-1	JZ-082-2-1	M20	135	30	100	500KG
JZ-082-1-2	JZ-082-2-2		185		150	
JZ-082-1-3	JZ-082-2-3	M24	135	35	100	800KG
JZ-082-1-4	JZ-082-2-4		185		150	

重型鑄鋼腳座

JZ-083

Heavy Cast Steel Foot



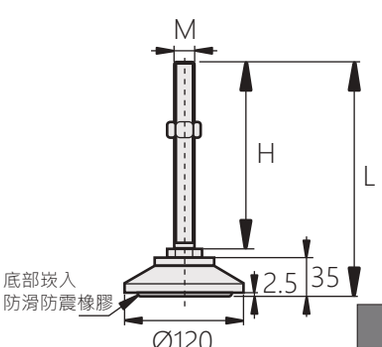

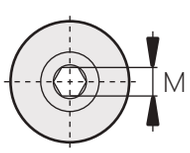

商品介紹:

- 採用鑄鋼材質，承重性能優良
- 接觸面積大，並配有橡膠膠墊，防滑防震性能優良
- 材質:不鏽鋼、鑄鋼、防震橡膠
- 表面處理:鍍亮鉻
- 用途:半導體設備、醫療設備、工業自動化設備等

Product description:

- Made of cast steel, excellent load-bearing performance
- Large contact area and rubber pad for excellent anti-skid and shock resistance
- Material: Stainless steel, cast steel, anti-vibration rubber
- Surface treatment: Bright chrome plating
- Uses: Semiconductor equipment, medical equipment, industrial automation equipment, etc.

商品型號		M	L	W	H	荷重
不鏽鋼	鑄鋼					
JZ-083-1-1	JZ-083-2-1	M20	147	30	100	800KG
JZ-083-1-2	JZ-083-2-2		195		150	
JZ-083-1-3	JZ-083-2-3	M24	147	35	100	1000KG
JZ-083-1-4	JZ-083-2-4		195		150	

安裝方式

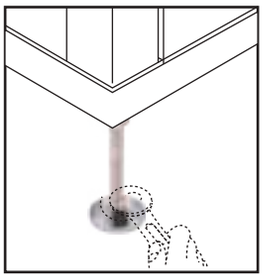

防滑吸震腳座

Small level adjustment foot

JZ-102



商品介紹:

- 材質:鐵
- 表面處理: 鍍鋅、黑色塗裝
- 用途:輸送設備、鋁擠型設備、各類型自動化機械設備

Product description:

- Material: Base-Steel & Rubber、Screw-Steel
- Surface treatment: Zinc plated, black powder coated
- Uses: Conveying equipment、aluminum extrusion equipment、various types of automated machinery and equipment

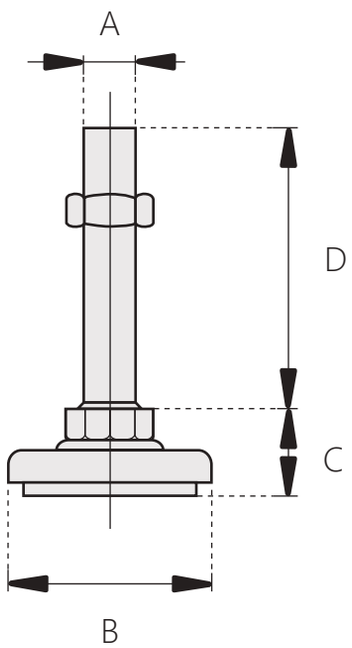

商品型號	材質	B	A	C	D	荷重(KG)
JZ-102-1-1	鍍鋅鐵材	60	M12	28	75	300
JZ-102-1-2		60	M12	28	100	300
JZ-102-1-3		60	M12	28	150	300
JZ-102-1-4		60	M16	30	75	500
JZ-102-1-5		60	M16	30	100	500
JZ-102-1-6		60	M16	30	150	500
JZ-102-1-7		60	1/2"	28	75	300
JZ-102-1-8		60	1/2"	28	100	300
JZ-102-1-9		60	1/2"	28	150	300
JZ-102-1-10		60	5/8"	30	100	500
JZ-102-1-11		60	5/8"	30	150	500
JZ-102-1-12		80	M16	32	100	500
JZ-102-1-13		80	M16	32	150	500
JZ-102-1-14		80	5/8"	32	100	500
JZ-102-1-15		80	5/8"	32	150	500
JZ-102-2-1	黑色電著塗裝鐵材	40	M10	20	50	200
JZ-102-2-2		40	M10	20	100	200
JZ-102-2-3		40	M12	22	50	300
JZ-102-2-4		40	M12	22	100	300
JZ-102-2-5		60	M12	28	50	300
JZ-102-2-6		60	M12	28	75	300
JZ-102-2-7		60	M12	28	100	300
JZ-102-2-8		60	M12	28	150	300
JZ-102-2-9		60	M16	30	70	500
JZ-102-2-10		60	M16	30	100	500
JZ-102-2-11		60	M16	30	150	500
JZ-102-2-12		60	1/2"	28	75	300
JZ-102-2-13		60	1/2"	28	100	300
JZ-102-2-14		60	1/2"	28	150	300
JZ-102-2-15		60	5/8"	30	75	500
JZ-102-2-16		60	5/8"	30	100	500
JZ-102-2-17		60	5/8"	30	150	500
JZ-102-2-18		80	M16	32	100	500
JZ-102-2-19		80	M16	32	150	500
JZ-102-2-20		80	5/8"	32	100	500
JZ-102-2-21		80	5/8"	32	150	500

鋁合金萬向水平調整腳座

JZ-106

Muilt-Angle Level Adjuster



商品介紹:

- 材質:底座 - 鋁合金、螺柱 - 鐵、不鏽鋼
- 用途:無塵室設備、鋁擠型設備、高負載機械設備
- 備註:可另配底座橡膠包覆, 型號範例:JZ-106-1-1-RP

Product description:

- Material : Base-Aluminum Alloy ;
  Screw-Steel Or Stainless Steel
- Uses: Conveying equipment, aluminum extrusion equipment, various types of automated machinery and equipment
- Notes: Can choose Base-Rubber type
  EX: JZ-106-1-1-RP

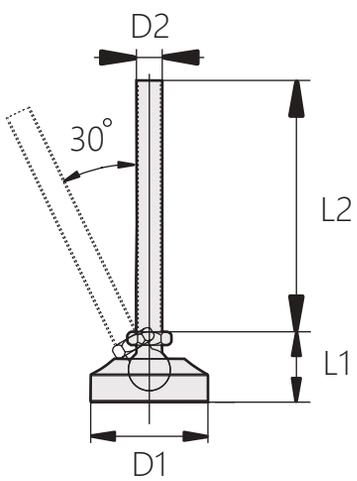

商品型號	材質	L1	L2	D1	D2	荷重
JZ-106-1-1	不鏽鋼	42	100	70	M16	1000KG
JZ-106-1-2			150			1000KG
JZ-106-1-3			100		M20	1500KG
JZ-106-1-4			150			1500KG
JZ-106-1-5			100	100	M16	1000KG
JZ-106-1-6			150			1000KG
JZ-106-1-7			100		M20	1500KG
JZ-106-1-8			150			1500KG
JZ-106-2-1	鐵		150	70	M16	1000KG
JZ-106-2-2			100		M20	1500KG
JZ-106-2-3			150			1500KG

鋁合金水平調整腳架

JZ-108

Aluminum Alloy Base Level Adjuster



商品介紹:

- 底座為鋁合金壓鑄一體成型，不鏽鋼底座最佳替代品
- 材質:底座 - 鋁合金、螺牙 - 鐵
- 表面處理:底盤 - 銀色塗裝、螺牙 - 鍍鋅

Product description:

- The base is made of aluminum alloy die-casting, the best substitute for stainless steel base
- Material: Base-Aluminum Alloy ; Screw-Steel
- Surface treatment: Base-Silver Powder Coated ; Screw-Zinc Plated

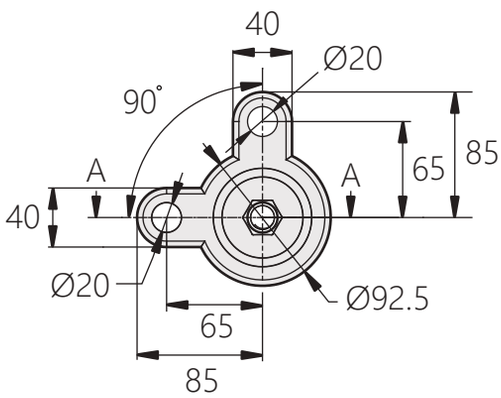

剖面圖A-A

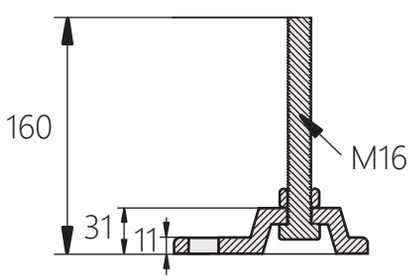

尼龍腳座 JZ-132

Nylon feet



商品介紹:

- 採用尼龍材質的底座，質量輕且承重性能好
- 材質:鐵,不鏽鋼,尼龍
- 表面處理:本體尼龍黑色，螺桿鍍鎳
- 用途:半導體設備、醫療設備、機床等

Product description:

- Nylon base, light weight and good load-bearing performance
- Material: Iron, Stainless steel, Nylon
- Surface treatment: Body nylon black, screw nickel plated
- Uses: Semiconductor equipment, medical equipment, machine tools, etc.

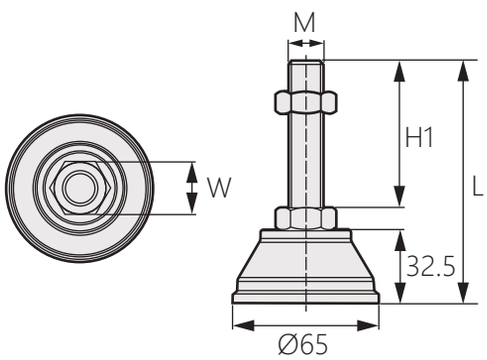

商品型號		M	L	W	H1	荷重(KG)
不鏽鋼	鐵					
JZ-132-1-1	JZ-132-2-1	M16	73	24	50	100
JZ-132-1-2	JZ-132-2-2		143		100	
JZ-132-1-3	JZ-132-2-3	M20		30		150
JZ-132-1-4	JZ-132-2-4		193		150	

尼龍重型調整腳架 JZ-1012

Nylon Heavy Adjustment Tripod



商品介紹:

- 一體成型射出尼龍底座
- 螺牙材質:不鏽鋼,鐵

Product description:

- Integrated one piece PA Base
- Screw material: Stainless steel, Iron

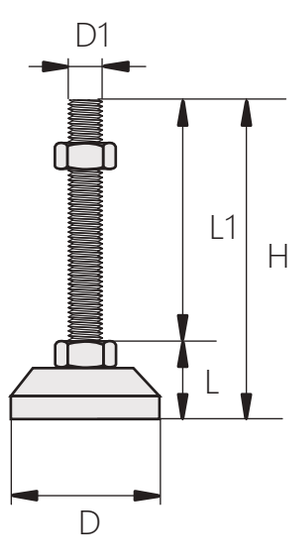

商品型號	材質	D	L	D1	牙距	L1	H	荷重(KG)
JZ-1012-1-1	不鏽鋼	65	45	M16	P2.0	100	145	600
JZ-1012-1-2		65	45	M16	P2.0	150	195	600
JZ-1012-1-3		65	45	M16	P2.0	200	245	600
JZ-1012-1-4		65	48	M20	P2.5	100	148	800
JZ-1012-1-5		65	48	M20	P2.5	150	198	800
JZ-1012-1-6		65	48	M20	P2.5	200	248	800
JZ-1012-2-1	鍍鋅	65	45	M16	P2.0	100	145	600
JZ-1012-2-2		65	45	M16	P2.0	150	195	600
JZ-1012-2-3		65	45	M16	P2.0	200	245	600
JZ-1012-2-4		65	45	M16	P2.0	250	295	600
JZ-1012-2-5		65	48	M20	P2.5	100	148	800
JZ-1012-2-6		65	48	M20	P2.5	150	198	800
JZ-1012-2-7		65	48	M20	P2.5	200	248	800
JZ-1012-2-8		65	48	M20	P2.5	250	298	800

不鏽鋼防滑吸震水平調整腳架 JZ-1023

Stainless Steel Anti-Slip & Vibration Level Adjuster



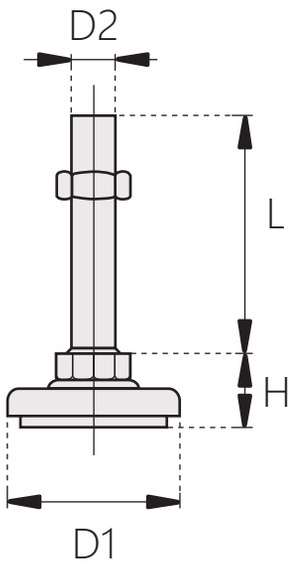

商品介紹:

- 材質:不鏽鋼
- 用途:輸送設備、鋁擠型設備、各類型自動化機械設備

Product description:

- Material:Stainless steel
- Uses: Conveyor equipment, aluminum extrusion equipment, various types of automated machinery and equipment.

商品型號	材質	D1	D2	H	L	荷重(KG)
JZ-1023-1-1	SUS304 表面電解處理	40	M10	21	50	200
JZ-1023-1-2			M12	23	50	300
JZ-1023-1-3			1/2"	23	50	300
JZ-1023-1-4			M10	21	100	200
JZ-1023-1-5			M12	23	100	300
JZ-1023-1-6			1/2"	23	100	300
JZ-1023-2-1		60	M12	30	50	300
JZ-1023-2-2			M12	30	100	300
JZ-1023-2-3			M16	32	100	500
JZ-1023-2-4			1/2"	30	50	300
JZ-1023-2-5			1/2"	30	100	300
JZ-1023-2-6			5/8"	32	100	500

不鏽鋼實心水平調整腳架座 JZ-1327

Stainless steel solid horizontal adjustment stand



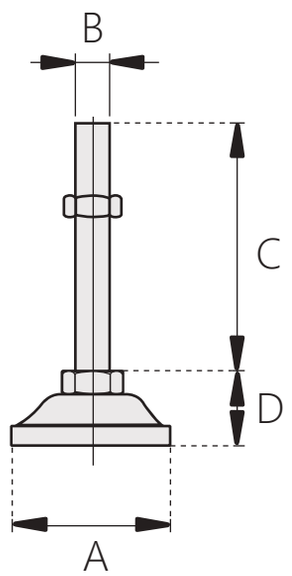

商品介紹:

- 材質:不鏽鋼304
- 用途:輸送設備、鋁擠型設備、各類型自動化機械設備

Product description:

- Material:Cast Stainless steel304
- Uses: conveyor equipment, aluminum extrusion equipment, various types of automated machinery and equipment

商品型號	A	B	D	C	荷重(KG)
JZ-1327-1-1	50	M16	31	100	1500
JZ-1327-1-2	50	M16	31	150	1500
JZ-1327-2-1	70	M16	31	100	1500
JZ-1327-2-2	70	M16	31	150	1500
JZ-1327-3-1	70	M20	35	100	2500
JZ-1327-3-2	70	M20	35	150	2500

重力型萬向腳杯

JZ-1308

Gravity Universal Foot Cup



商品介紹:

- ■螺牙材質:不鏽鋼
- ■表面處理:拋光
- ■備註 : JZ-1308-2系列為加防震橡膠, 可訂做M24,M30,M36規格,敬請洽詢

Product description:

- ■Screw material: Stainless steel
- ■Surface treatment: Polishing
- ■Note: JZ-1308-2 series is shockproof rubber,M24, M30, M36 specifications can be customized, please contact.

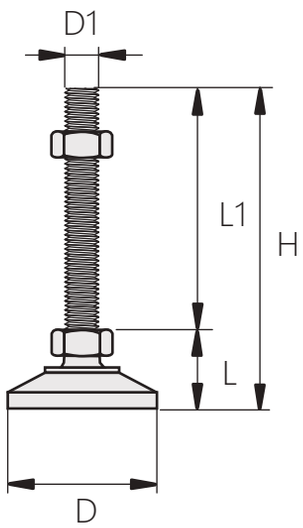

商品型號	材質	D	L	D1	牙距	L1	H	荷重(KG)
JZ-1308-1-1	不鏽鋼	70	50	M16	P2.0	100	150	1500
JZ-1308-1-2		70	50	M16	P2.0	150	200	1500
JZ-1308-1-3		70	50	M20	P2.5	100	150	2000
JZ-1308-1-4		70	50	M20	P2.5	150	200	2000
JZ-1308-1-5		100	50	M16	P2.0	100	150	1500
JZ-1308-1-6		100	50	M16	P2.0	150	200	1500
JZ-1308-1-7		100	50	M20	P2.5	100	150	2000
JZ-1308-1-8		100	50	M20	P2.5	150	200	2000
JZ-1308-2-1	不鏽鋼 防震橡膠	80	60	M16	P2.0	100	160	1500
JZ-1308-2-2		80	60	M16	P2.0	150	210	1500
JZ-1308-2-3		80	60	M20	P2.5	100	160	2000
JZ-1308-2-4		80	60	M20	P2.5	150	210	2000

鋁合金重力型避震調整腳架

JZ-1310

Anti-Vibration aluminum-base conductive leveling feet



商品介紹:

- ■鋁合金一體成型底座,可做鍍鉻處理
- ■橡膠抗阻值<50Ω
- ■螺牙材質:鋁合金、不鏽鋼、鐵
- ■備註:可訂製M24,M30,M36規格,敬請洽詢

Product description:

- ■Integrated one piece Aluminum Conductive Base,can be chrome plated.
- ■Rubber resistance value <50Ω
- ■Screw material: Aluminum alloy, Stainless steel, Iron
- ■Note: M24, M30, M36 specifications can be customized, please contact.

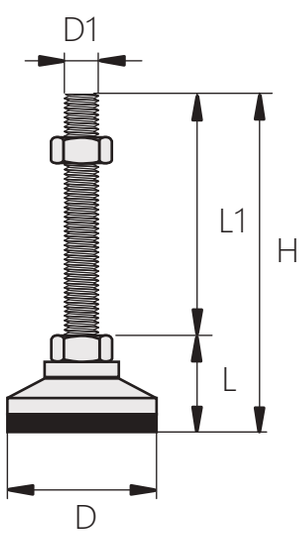

商品型號	材質	D	L	D1	牙距	L1	H	荷重 (KG)
JZ-1310-1-1	不鏽鋼	100	48	M16	P2.0	100	156	1000
JZ-1310-1-2		100	48	M16	P2.0	150	206	1000
JZ-1310-1-3		100	51	M20	P2.5	100	159	1500
JZ-1310-1-4		100	51	M20	P2.5	150	209	1500
JZ-1310-2-1	鍍鋅	100	48	M16	P2.0	100	156	1000
JZ-1310-2-2		100	48	M16	P2.0	150	206	1000
JZ-1310-2-3		100	48	M16	P2.0	200	256	1000
JZ-1310-2-4		100	51	M20	P2.5	100	159	1500
JZ-1310-2-5		100	51	M20	P2.5	150	209	1500
JZ-1310-2-6		100	51	M20	P2.5	200	259	1500

鋁合金重型調整腳

JZ-1309

Aluminum base leveling feet



商品介紹:
- ■鋁合金一體成型底座,可做鍍鉻處理
- ■螺牙材質:不鏽鋼,鐵
- ■表面處理:鍍鋅
- ■備註:可訂做M24.M30.M36規格,敬請洽詢

Product description:
- ■Integrated one piece Aluminum Conductive Base,can be chrome plated.
- ■Screw material: Stainless steel, iron
- ■Surface treatment: Zinc plating
- ■Note: M24, M30, M36 specifications can be customized, please contact.

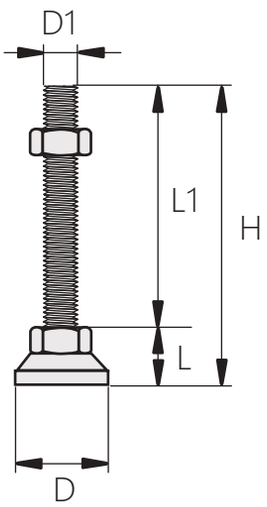

商品型號	材質	D	L	D1	牙距	L1	H	荷重(KG)
JZ-1309-1-1	不鏽鋼	65	45	M16	P2.0	100	145	1500
JZ-1309-1-2		65	45	M16	P2.0	150	195	1500
JZ-1309-1-3		65	48	M20	P2.5	100	148	2000
JZ-1309-1-4		65	48	M20	P2.5	150	198	2000
JZ-1309-1-5		90	46	M16	P2.0	100	146	1500
JZ-1309-1-6		90	46	M16	P2.0	150	196	1500
JZ-1309-1-7		90	49	M20	P2.5	100	149	2000
JZ-1309-1-8		90	49	M20	P2.5	150	199	2000
JZ-1309-2-1	鍍鋅	65	45	M16	P2.0	100	145	1500
JZ-1309-2-2		65	45	M16	P2.0	150	195	1500
JZ-1309-2-3		65	45	M16	P2.0	200	245	1500
JZ-1309-2-4		65	48	M20	P2.5	100	148	2000
JZ-1309-2-5		65	48	M20	P2.5	150	198	2000
JZ-1309-2-6		65	48	M20	P2.5	200	248	2000
JZ-1309-2-7		90	46	M16	P2.0	100	146	1500
JZ-1309-2-8		90	46	M16	P2.0	150	196	1500
JZ-1309-2-9		90	46	M16	P2.0	200	246	1500
JZ-1309-2-10		90	49	M20	P2.5	100	149	2000
JZ-1309-2-11		90	49	M20	P2.5	150	199	2000
JZ-1309-2-12		90	49	M20	P2.5	200	249	2000

重力型防震腳

JZ-1321

Gravity tripod



商品介紹:
- ■Ø14壁虎孔
- ■螺牙材質:鐵

Product description:
- ■Ø14 Anchor Bolt Hole
- ■Screw material: Iron

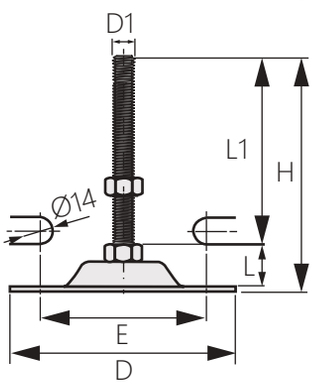

商品型號	材質	D	L	D1	牙距	L1	H	荷重(KG)	偏芯距E
JZ-1321-1	鍍鋅	120*87	25	M16	P2.0	100	125	200	88
JZ-1321-2		120*87	25	M16	P2.0	150	175	200	88

重力型防震腳 JZ-1318

Gravity shockproof feet



商品介紹:
- ■螺牙材質:電泳螺絲
- ■備註:如需訂購型號為JZ-1318-1-螺絲長度

Product description:
- ■Screw material: Electrophoresis screw
- ■Note: If you need to order the model is JZ-1318-1-screw length.

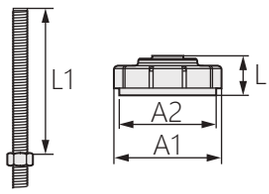

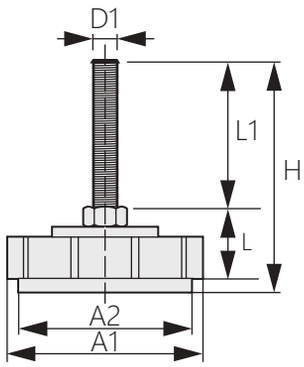

商品型號	材質	A1	A2	L	D1	牙距	L1	荷重(KG)	可調高度
JZ-1318-1	電泳	100	100	48	M16	P2.0	110	800	30
JZ-1318-2							150		
JZ-1318-3		100	95	55	M20	P2.5	110	1000	30
JZ-1318-4							150		
JZ-1318-5							200		
JZ-1318-6		150	135	72	M20	P2.5	110	1500	30
JZ-1318-7							150		
JZ-1318-8							200		

精密型防震腳 JZ-1320

Precision shockproof feet



商品介紹:
- ■螺牙材質:電泳螺絲

Product description:
- ■Screw material: Electrophoresis screw

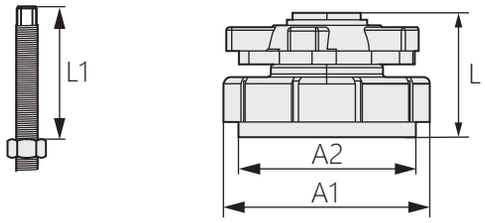

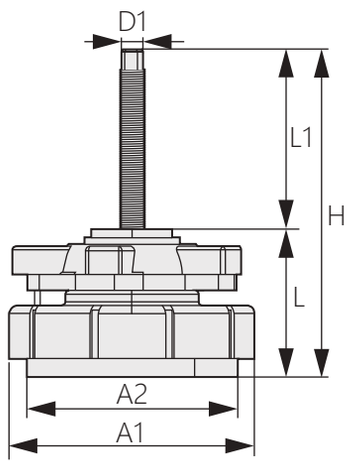

商品型號	材質	A1	A2	L	D1	牙距	L1	荷重(KG)	荷重極限(KG)	可調高度
JZ-1320-1	電泳	100	90	77	M12	P1.75	50	600	7960	25
JZ-1320-2		150	135	100	M16	P2.0	110	1000	7960	40
JZ-1320-3		200	180	99	M20	P2.5	120	2500	7960	40
JZ-1320-4		250	230	105	M24	P3.0	180	4000	7960	40

重力型防震腳 JZ-1319

Gravity shockproof feet



商品介紹:

■螺牙材質:電泳螺絲

Product description:

■Screw material: Electrophoresis screw

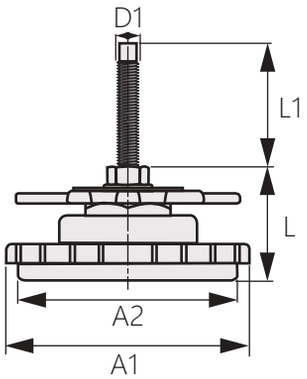

商品型號	材質	D	L	D1	牙距	L1	H	荷重 (KG)	可調高度
JZ-1319-1	電泳	100	90	68	M12	P1.75	50	1000	20
JZ-1319-2		125	115	71	M16	P2.0	110	1500	20
JZ-1319-3		150	140	80	M16	P2.0	110	2500	28
JZ-1319-4		200	185	87	M20	P2.5	120	3500	28

上調式重力型調整腳架 JZ-1307

Gravity Type Adjustable Tripod



商品介紹:

■一體成型不鏽鋼底座

■螺牙材質:不鏽鋼

■表面處理:拋光

■備註:可訂製M24,M30,M36規格,敬請洽詢

Product description:

■Integrated one piece Stainless Base

■Screw material: Stainless steel

■Surface treatment: Polishing

■Note: M24, M30, M36 specifications can be customized, please contact.

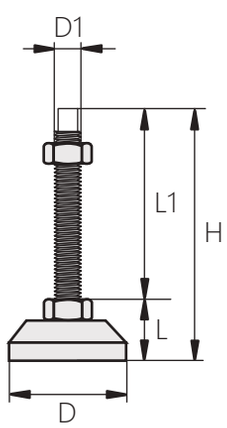

商品型號	材質	D	L	D1	牙距	L1	H	荷重(KG)	對邊 (mm)
JZ-1307-1	不鏽鋼	50	32	M16	P2.0	100	132	1500	11.8
JZ-1307-2		50	32	M16	P2.0	150	182	1500	11.8
JZ-1307-3		70	34	M16	P2.0	100	134	1500	11.8
JZ-1307-4		70	34	M16	P2.0	150	184	1500	11.8
JZ-1307-5		70	36	M20	P2.5	100	136	2000	13.4
JZ-1307-6		70	36	M20	P2.5	150	186	2000	13.4
JZ-1307-7		70	36	M20	P2.5	200	236	2000	13.4

偏芯水滴型腳架 JZ-1322

Eccentric drop type tripod



商品介紹:

- 材質:不鏽鋼304、鍍鋅

Product description:

- Material: Stainless steel 304, galvanized

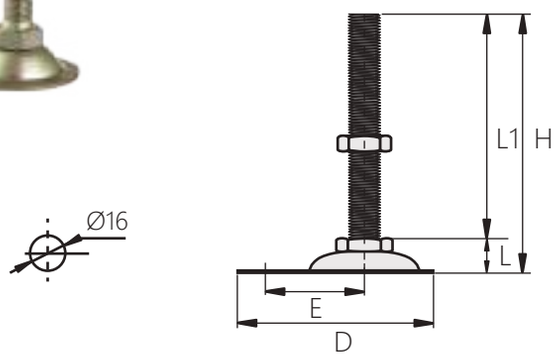

商品型號		D	L	D1	牙距	L1	H	荷重 (KG)	偏芯距 E
不鏽鋼	鍍鋅								
JZ-1322-1-1	JZ-1322-2-1	125*65	32	M12	P1.75	75	107	200	68
JZ-1322-1-2	JZ-1322-2-2	125*65				100	132		
JZ-1322-1-3	JZ-1322-2-3	125*65				150	182		
JZ-1322-1-4	JZ-1322-2-4	125*65	35	M16	P2	100	135	300	
JZ-1322-1-5	JZ-1322-2-5	125*65				150	185		

萬向腳架 JZ-103

Muilt-Angle Level Adjuster



商品介紹:

- 材質:底座- 尼龍、螺柱- 鐵
- 螺牙材質:鐵、不鏽鋼
- 用途:輸送設備 、鋁擠型設備 、各類型自動化機械設備

Product description:

- Material: Base-Nylon ; Screw-Steel
- Screw material: Iron, stainless steel
- Uses: Conveyor equipment, aluminum extrusion equipment, various types of automated machinery and equipment

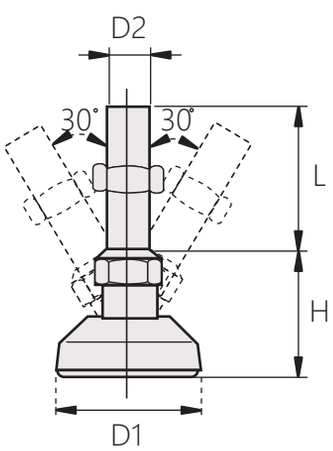

商品型號	材質	L	D1	D2	H	荷重
JZ-103-1-1	鐵	100	65	M16	39	500
JZ-103-1-2	鐵	150				
JZ-103-2-1	不鏽鋼	100				
JZ-103-2-2	不鏽鋼	150				

重型避震水平調整腳座

JZ-1326

Heavy Duty & Anti-Vibration Level Adjuster



商品介紹:

- 材質:底盤-橡膠、
  螺柱-鐵、不鏽鋼
- 螺牙材質:鐵材、不鏽鋼
- 用途:無塵室設備、鋁擠型設備、高負載機械設備

Product description:

- Material:Base-Rubber ; Screw-Steel & Stainless Steel
- Screw material: iron, stainless steel
- Uses: clean room equipment, aluminum extrusion equipment, high load mechanical equipment

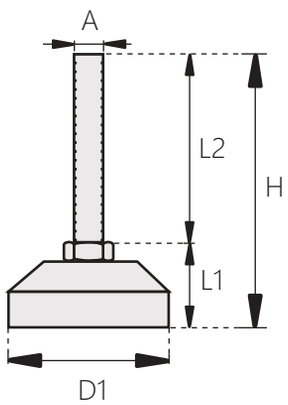

商品型號	材質	L2	L1	D2	H
JZ-1326-1-1	鐵	100	43	M16	143
JZ-1326-1-2		150			193
JZ-1326-1-3		200			243
JZ-1326-1-4		250			293
JZ-1326-1-5		100	46	M20	146
JZ-1326-1-6		150			196
JZ-1326-1-7		200			246
JZ-1326-1-8		250			296
JZ-1326-1-9		100	43	5/8"	143
JZ-1326-1-10		150			193
JZ-1326-1-11		100	46	3/4"	146
JZ-1326-1-12		150			196
JZ-1326-2-1	不鏽鋼	100	43	M16	143
JZ-1326-2-2		150			193
JZ-1326-2-3		200			243
JZ-1326-2-4		100	46	20	146
JZ-1326-2-5		150			196
JZ-1326-2-6		200			246
D1=90、荷重=800					

喇叭腳架

JZ-1405

Horn stand



商品介紹:

- 螺牙材質:不鏽鋼,鐵
- 表面處理:震動研磨,鍍鋅

Product description:

- Screw material: Stainless steel,Iron
- Surface treatment: Vibration grinding,Zinc plating

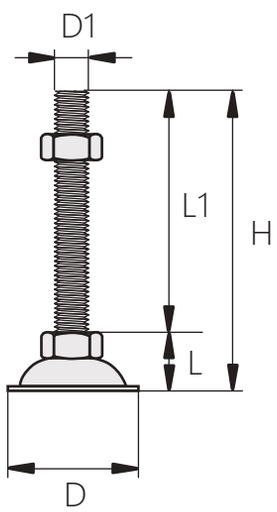

商品型號	材質	D	L	D1	牙距	L1	H	荷重(KG)
JZ-1405-1-1	不鏽鋼	50	18	M10	P1.5	50	68	150
JZ-1405-1-2		50	18	M10	P1.5	100	118	150
JZ-1405-1-3		50	20	M12	P1.75	50	70	200
JZ-1405-1-4		50	20	M12	P1.75	75	95	200
JZ-1405-1-5		50	20	M12	P1.75	100	120	200
JZ-1405-1-6		60	28	M16	P2.0	100	128	300
JZ-1405-1-7		60	28	M16	P2.0	150	178	300
JZ-1405-1-8		70	27	M12	P1.75	75	102	300
JZ-1405-1-9		70	27	M12	P1.75	100	127	300
JZ-1405-1-10		70	27	M12	P1.75	150	177	300
JZ-1405-1-11		70	30	M16	P2.0	100	130	400
JZ-1405-1-12		70	30	M16	P2.0	150	180	400
JZ-1405-2-1	鍍鋅	50	18	M10	P1.5	50	68	150
JZ-1405-2-2		50	18	M10	P1.5	100	118	150
JZ-1405-2-3		50	20	M12	P1.75	50	70	200
JZ-1405-2-4		50	20	M12	P1.75	75	95	200
JZ-1405-2-5		50	20	M12	P1.75	100	120	200
JZ-1405-2-6		60	28	M16	P2.0	100	128	300
JZ-1405-2-7		60	28	M16	P2.0	150	178	300
JZ-1405-2-8		70	27	M12	P1.75	75	102	300
JZ-1405-2-9		70	27	M12	P1.75	100	127	300
JZ-1405-2-10		70	27	M12	P1.75	150	177	300
JZ-1405-2-11		70	30	M16	P2.0	100	130	400
JZ-1405-2-12		70	30	M16	P2.0	150	180	400

水平調節腳座

Leveling foot

JZ-130



商品介紹:

- 採用尼龍材質的底座，質量輕且承重性能好
- 接觸面積大，並配有膠墊，防震性能良好產品
- 材質:不鏽鋼(SUS304)或鐵(SPCC)、尼龍
- 表面處理:本體尼龍黑色，螺桿鍍鎳
- 用途:半導體設備、醫療設備、機床等

Product description:

- Made of nylon base, light weight and good load-bearing performance
- Large contact area with rubber pad and good shockproof performance
- Material: Stainless steel (SUS304) or iron (SPCC), nylon
- Surface treatment: Body nylon black, screw nickel plating
- Uses: Semiconductor equipment, medical equipment, machine tools, etc.

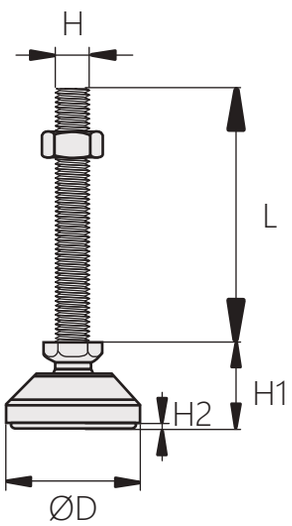

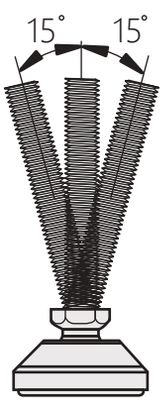

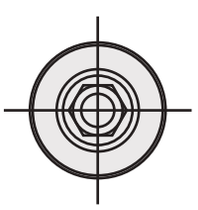

商品型號		M	L	ØD	H1	H2	荷重(KG)
鐵	不鏽鋼						
JZ-130-1-1	JZ-130-2-1	M8	35	50	30	1.5	200
JZ-130-1-2	JZ-130-2-2		50				
JZ-130-1-3	JZ-130-2-3		75				
JZ-130-1-4	JZ-130-2-4	M10	50				300
JZ-130-1-5	JZ-130-2-5		75				
JZ-130-1-6	JZ-130-2-6		100				
JZ-130-1-7	JZ-130-2-7	M12	75	60	35		500
JZ-130-1-8	JZ-130-2-8		100				
JZ-130-1-9	JZ-130-2-9		150				
JZ-130-1-10	JZ-130-2-10	M16	75				600
JZ-130-1-11	JZ-130-2-11		100	80			
JZ-130-1-12	JZ-130-2-12		150				
JZ-130-1-13	JZ-130-2-13		100		42		
JZ-130-1-14	JZ-130-2-14		150				
JZ-130-1-15	JZ-130-2-15	M20	100				800
JZ-130-1-16	JZ-130-2-16		150				
JZ-130-1-17	JZ-130-2-17	M16	100	100	45		600
JZ-130-1-18	JZ-130-2-18		150				
JZ-130-1-19	JZ-130-2-19	M20	100				800
JZ-130-1-20	JZ-130-2-20		150				

福馬調節支撐腳輪

Heavy Duty & Anti-Vibration Level Adjuster

JZ-40



商品介紹:

- 方便進行設備的移動和定位
- 結構設計優良，轉動時無噪音
- 中心有調節腳座，不會晃動，構造穩定
- 材質:主體-鑄鋁、輪子:尼龍
- 表面處理:白色噴塗
- 移動:用手鬆動旋鈕，收起調節腳座，然後移動
  在有荷載轉動困難的情況下請用手扳移動
- 固定:用扳手轉動緊固螺母，伸出調節座後固定
- 用途:醫療設備、半導體設備、機床

Product description:

- Convenient for device movement and positioning
- Excellent structural design, no noise when turning
- The center has an adjustment foot, it will not shake, and the structure is stable
- Material: cast aluminum, nylon
- Surface treatment: White spray
- Move: Loosen the knob by hand, put away the adjustment foot, then move
  Move with your hand when it is difficult to rotate the load
- Fixing: Turn the tightening nut with a wrench, extend the adjusting seat and fix it
- Uses: Medical equipment, semiconductor equipment, machine tools

JZ-40-1-1
JZ-40-1-2
JZ-40-1-3
JZ-40-1-4

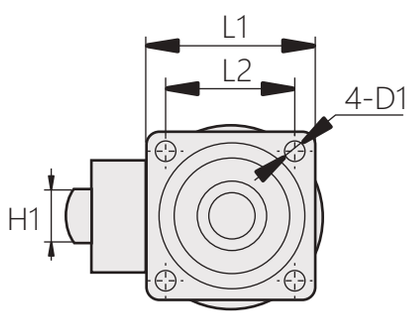

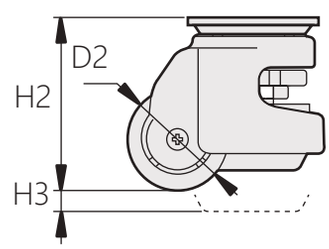

商品型號	L1	L2	H1	H2	H3	D1	D2	承重(KG)
JZ-40-1-1	55	42	18	69	10	6.5	40	150
JZ-40-1-2	73	57	25	82	10	7	50	500
JZ-40-1-3	90	70	30	102	15	9	63	1000
JZ-40-1-4	95	70	30	120	12	11	73	1500

JZ-40-2-1
JZ-40-2-2
JZ-40-2-3
JZ-40-2-4

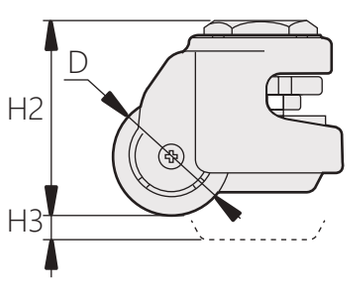

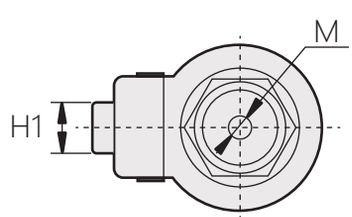

商品型號	H1	H2	H3	M	D	承重(KG)
JZ-40-2-1	18	71	10	M8*12	40	150
JZ-40-2-2	25	82	10	M12*13	50	500
JZ-40-2-3	28	102	15	M12*15	63	1000
JZ-40-2-4	30	120	12	M16*14	73	1500

調整式腳輪 JZ-200

Swivel And Rigid Casters With Level Adjuster



商品介紹:
- 荷重200公斤
- 使用溫度-10~+80度
- 材質:鐵尼龍輪
- 表面處理:鍍鋅

Product description:
- Load 200 kg
- Use temperature -10 ~ +80 degrees
- Material: Steel ; Wheel-Nylon
- Surface treatment: Zinc Plated

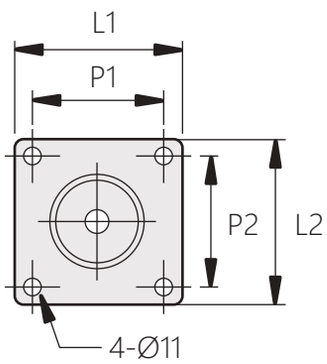

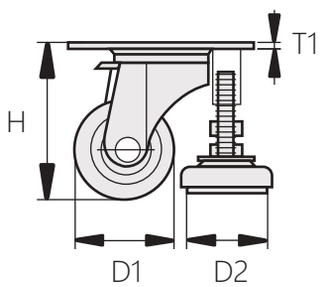

商品型號	輪子材質	腳輪直徑D2	輪徑D1	L1	L2	P1	P2	T1	H	荷重
JZ-200-1	尼龍	58	62	120	120	95	95	4	91	200KG
JZ-200-2			75						107	

調整式腳輪 JZ-201

Swivel Casters With Level Adjuster

商品介紹:
- 材質:主體-鐵、輪子-尼龍
- 用途:黑色塗裝

Product description:
- Material: Main body-iron, wheels-nylonl
- Uses: Black painting



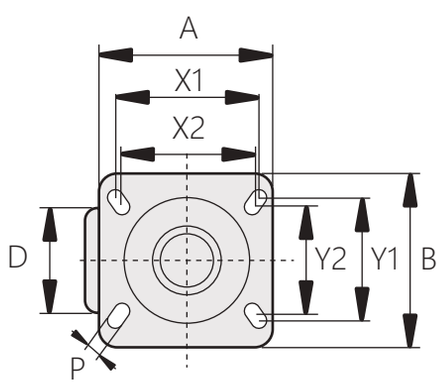

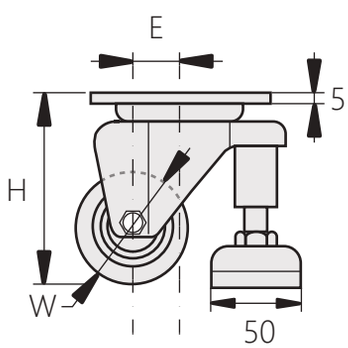

商品型號	W	D	A*B	X1/X2 * Y1/Y2	P	H	E	L	軸承
JZ-201-1	63	50	100*82	80/75*60/54	11	96	26	300	球
JZ-201-2	75					108			

藍鋅TPR輪

Zinc blue TPR round hole in the top

JZ-202



JZ-202-2S

商品介紹:

- 材質:底座 -不鏽鋼
  輪子 -熱塑性橡膠輪
- 單波盤不鏽鋼支架TPR包PP輪芯
- 備註:JZ-202-1系列可選配 S活動 H煞車
  JZ-202-2系列可選配 R固定 S活動 H煞車
  JZ-202-3系列可選配 S活動 H煞車

Product description:

- Material: Base - Stainless steel
  Wheels - thermoplastic rubber wheels
- Single-wave disc stainless steel bracket TPR pack PP core.
- Note: JZ-202-1 series optional S activity H brake
  JZ-202-2 series optional R fixed S active H brake
  JZ-202-3 series optional S activity H brake



JZ-202-2R



JZ-202-2H



JZ-202-1S



JZ-202-1H



JZ-202-3H



JZ-202-3S

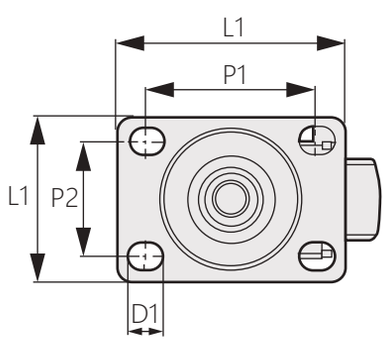

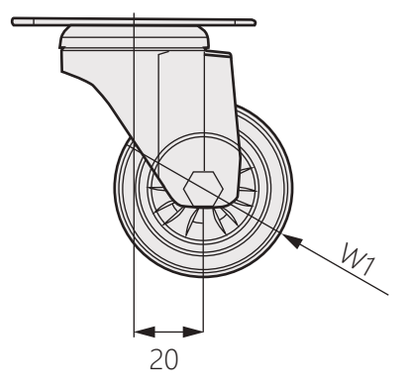

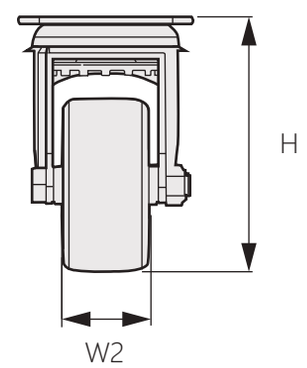

藍鋅TPR輪

JZ-202

Zinc blue TPR round hole in the top

商品型號	輪子材質	輪徑 (W1)	輪寬 (W2)	荷重(KG)	安裝高度 (H)	牙桿尺寸 (H2)
JZ-202-1-1_	TPR	40	25	30	63	M10*25
JZ-202-1-2_		50		40	77.5	
JZ-202-1-3_		63		50	94	
JZ-202-1-4_		75		60	103	

商品型號	輪子材質	輪徑 (W1)	輪寬 (W2)	荷重 (KG)	安裝高度 (H)	底板尺寸 (L1*L2)	孔距 (P1*P2)	孔徑 (D1)
JZ-202-2-1_	TPR	40	25	30	61	70*51	52*35	8.5
JZ-202-2-2_		50		40	75.5			
JZ-202-2-3_		63		50	92			
JZ-202-2-4_		75		60	101			

商品型號	輪子材質	輪徑 (W1)	輪寬 (W2)	荷重(KG)	安裝高度 (H)	孔頂尺寸 (D2)
JZ-202-3-1_	TPR	40	25	30	59	Ø10.2
JZ-202-3-2_		50		40	73.5	
JZ-202-3-3_		63		50	90	
JZ-202-3-4_		75		60	99	

不鏽鋼TPR輪

JZ-203

Stainless steel TPR weel



JZ-203-1S

商品介紹:

- 不鏽鋼一體拉伸成型支架
- 雙層滾珠設計
- 全覆式防層蓋
- 材質:不鏽鋼單軸承塑芯TPR輪
- 用途:工業、物流台車、重型機械設備、常用於各式推車及台車
- 備註:JZ-203-1系列可選配 R固定 S活動 H煞車
  JZ-203-2系列可選配 S活動 H煞車
  JZ-203-3系列可選配 S活動 H煞車

Product description:

- Stainless steel integrated stretch forming bracket
- Double-layer ball design
- Full cover dust cover
- Material: Stainless steel single bearing plastic core TPR wheel
- Uses: Industry, logistics trolleys, heavy machinery and equipment, often used in various trolleys and trolleys.
- Note: JZ-203-1 series optional R fixed S active H brake
  JZ-203-2 series optional S active H brake
  JZ-203-3 series optional S active H brake

不鏽鋼TPR輪

Stainless steel TPR weel

JZ-203



JZ-203-1R



JZ-203-1H



JZ-203-2S



JZ-203-2H



JZ-203-3H



JZ-203-3S

商品型號	輪子材質	輪徑 (W1)	輪寬 (W2)	荷重(KG)	安裝高度 (H)	底板尺寸 (L1*L2)	孔距 (P1*P2)	孔徑 (D1)	日式底板尺寸	日式孔距
JZ-203-1-1_	TPR	40	25	30	61	70*51	52*35	60*60	40*40	8.5
JZ-203-1-2_		50		40	75.5					
JZ-203-1-3_		63		50	92					
JZ-203-1-4_		75		60	101					

商品型號	輪子材質	輪徑 (W1)	輪寬 (W2)	荷重(KG)	安裝高度 (H)	牙桿尺寸 (H2)
JZ-203-2-1_	TPR	40	25	30	63	M10*25
JZ-203-2-2_		50		40	77.5	
JZ-203-2-3_		63		50	94	
JZ-203-2-4_		75		60	103	

商品型號	輪子材質	輪徑 (W1)	輪寬 (W2)	荷重(KG)	安裝高度 (H)	孔頂尺寸 (D2)
JZ-203-3-1_	TPR	40	25	30	59	Ø10.2
JZ-203-3-2_		50		40	73.5	
JZ-203-3-3_		63		50	90	
JZ-203-3-4_		75		60	99	

不鏽鋼平底PA輪

JZ-204

Stainless steel flat bottom PA wheel



JZ-204-1S

商品介紹:

- 材質:輪子-尼龍,支架-不鏽鋼
- 用途:重工業、重負荷物流台車、重型機械設備、廚房設備及食品業
- 備註:JZ-204-1系列可選配 R固定 S活動 H煞車
  JZ-204-2系列可選配 S活動 H煞車
  JZ-204-3系列可選配 S活動 H煞車

Product description:

- Material: Wheel nylon, stainless steel bracket
- Uses: Heavy industry, heavy-duty logistics trolleys, heavy machinery and equipment, kitchen equipment and food industry.
- Note: JZ-204-1 series optional R fixed S active H brake
  JZ-204-2 series optional S active H brake
  JZ-204-3 series optional S active H brake



JZ-204-1R



JZ-204-1H



JZ-204-2S



JZ-204-2H



JZ-204-3H



JZ-204-3S

商品型號	輪子材質	輪徑 (W1)	輪寬 (W2)	荷重(KG)	安裝高度 (H)	底板尺寸 (L1*L2)	孔距 (P1*P2)	孔徑 (D1)	日式底板尺寸	日式孔距
JZ-204-1-1_	PA	40	25	50	61	70*51	52*35	60*60	40*40	8.5
JZ-204-1-2_		50		60	75.5					
JZ-204-1-3_		63		70	92					
JZ-204-1-4_		75		80	101					

商品型號	輪子材質	輪徑 (W1)	輪寬 (W2)	荷重(KG)	安裝高度 (H)	牙桿尺寸 (H2)
JZ-204-2-1_	PA	40	25	50	63	M10*25
JZ-204-2-2_		50		60	77.5	
JZ-204-2-3_		63		70	94	
JZ-204-2-4_		75		80	103	

不鏽鋼平底PA輪

JZ-204

Stainless steel flat bottom PA wheel

商品型號	輪子材質	輪徑 (W1)	輪寬 (W2)	荷重(KG)	安裝高度 (H)	孔頂尺寸 (D2)
JZ-204-3-1_	PA	40	25	50	59	Ø10.2
JZ-204-3-2_		50		60	73.5	
JZ-204-3-3_		63		70	90	
JZ-204-3-4_		75		80	99	

鍍鋅PU輪

JZ-205

Galvanized PU wheels



JZ-205-1S

商品介紹:

- 一體拉伸成型支架
- 雙層滾珠設計
- 全覆式防塵蓋
- 材質:單軸承塑芯PU輪
- 用途:工業、物流台車、重型機械設備、常用於各式推車及台車
- 備註:JZ-205-1系列可選配 R固定 S活動 H煞車
  JZ-205-2系列可選配 S活動 H煞車
  JZ-205-3系列可選配 S活動 H煞車

Product description:

- Integrated stretch forming bracket
- Double-layer ball design
- Full cover dust cover
- Material: Single bearing plastic core PU wheel
- Uses: Heavy industry, heavy-duty logistics trolleys, heavy machinery and equipment, kitchen equipment and food industry.
- Note: JZ-205-1 series optional R fixed S active H brake
  JZ-205-2 series optional S active H brake
  JZ-205-3 series optional S active H brake



JZ-205-1R



JZ-205-1H



JZ-205-2S



JZ-205-2H



JZ-205-3H



JZ-205-3S

鍍鋅PU輪 JZ-205

Galvanized PU wheels

商品型號	輪子材質	輪徑 (W1)	輪寬 (W2)	荷重(KG)	安裝高度 (H)	底板尺寸 (L1*L2)	孔距 (P1*P2)	孔徑 (D1)
JZ-205-1-1_	PU	40	25	40	61	70*51	52*35	8.5
JZ-205-1-2_		50		50	75.5			
JZ-205-1-3_		63		60	92			
JZ-205-1-4_		75		70	101			

商品型號	輪子材質	輪徑 (W1)	輪寬 (W2)	荷重(KG)	安裝高度 (H)	牙桿尺寸 (H2)
JZ-205-2-1_	PU	40	25	40	63	M10*25
JZ-205-2-2_		50		50	77.5	
JZ-205-2-3_		63		60	94	
JZ-205-2-4_		75		70	103	

商品型號	輪子材質	輪徑 (W1)	輪寬 (W2)	荷重(KG)	安裝高度 (H)	孔頂尺寸 (D2)
JZ-205-3-1_	PU	40	25	40	59	Ø10.2
JZ-205-3-2_		50		50	73.5	
JZ-205-3-3_		63		60	90	
JZ-205-3-4_		75		70	99	

鍍鋅導電TPR輪 JZ-206

Galvanized TPR wheels



JZ-206-1S

商品介紹:

- 一體拉伸成型支架
- 雙層滾珠設計
- 全覆式防塵蓋
- 材質:單軸承塑芯導電TPR輪
- 用途:工業、物流台車、重型機械設備、常用於各式推車及台車
- 備註:JZ-206-1系列可選配 R固定 S活動 H煞車
  JZ-206-2系列可選配 S活動 H煞車
  JZ-206-3系列可選配 S活動 H煞車

Product description:

- Integrated stretch forming bracket
- Double-layer ball design
- Full cover dust cover
- Material: Single bearing plastic core conductive TPR wheel
- Uses: Industry, logistics trolleys, heavy machinery equipment, commonly used in various carts and trolleys.
- Note: JZ-206-1 series optional R fixed S active H brake
  JZ-206-2 series optional S active H brake
  JZ-206-3 series optional S active H brake

鍍鋅導電TPR輪

Galvanized TPR wheels

JZ-206

CAD



JZ-206-1R



JZ-206-1H



JZ-206-2S



JZ-206-2H



JZ-206-3H



JZ-206-3S

商品型號	輪子材質	輪徑 (W1)	輪寬 (W2)	荷重(KG)	安裝高度 (H)	底板尺寸 (L1*L2)	孔距 (P1*P2)	孔徑 (D1)
JZ-206-1-1_	導電TPR	40	25	30	61	70*51	52*35	8.5
JZ-206-1-2_		50		40	75.5			
JZ-206-1-3_		63		50	92			
JZ-206-1-4_		75		60	101			

商品型號	輪子材質	輪徑 (W1)	輪寬 (W2)	荷重(KG)	安裝高度 (H)	牙桿尺寸 (H2)
JZ-206-2-1_	導電TPR	40	25	30	63	M10*25
JZ-206-2-2_		50		40	77.5	
JZ-206-2-3_		63		50	94	
JZ-206-2-4_		75		60	103	

商品型號	輪子材質	輪徑 (W1)	輪寬 (W2)	荷重(KG)	安裝高度 (H)	孔頂尺寸 (D2)
JZ-206-3-1_	導電TPR	40	25	30	59	Ø10.2
JZ-206-3-2_		50		40	73.5	
JZ-206-3-3_		63		50	90	
JZ-206-3-4_		75		60	99	

PP輪

PP round

JZ-303



JZ-303-3H



JZ-303-3G



JZ-303-3D

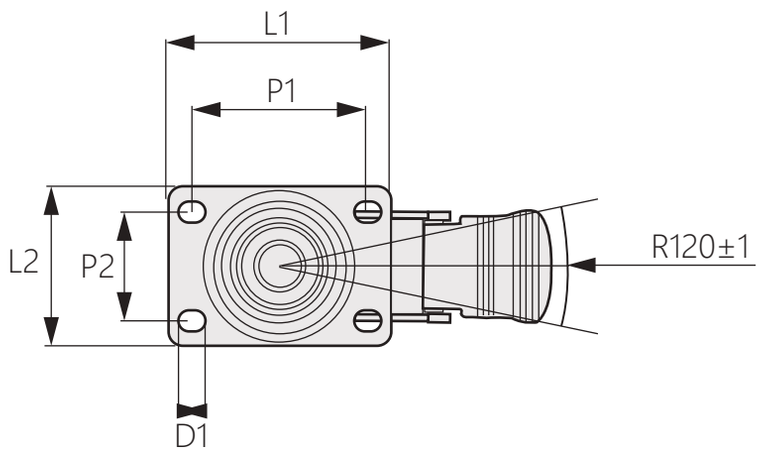

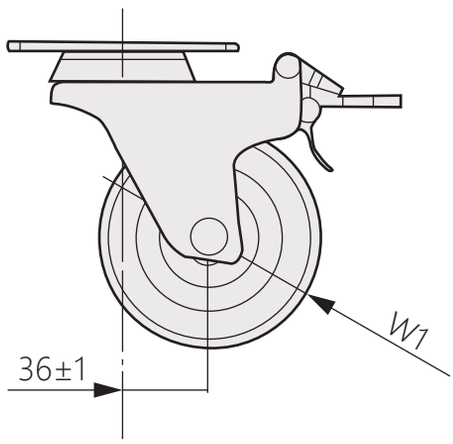

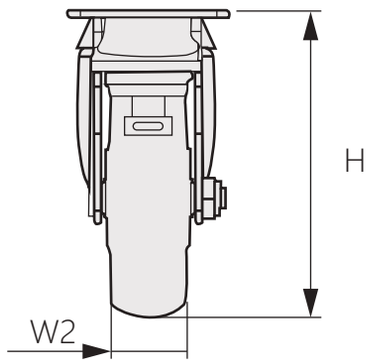

商品型號	輪子材質	輪徑 (W1)	輪寬 (W2)	荷重(KG)	安裝高度 (H)	底板尺寸 (L1*L2)	孔距 (P1*P2)	孔徑 (D1)
JZ-303-1-1_	PP	63	32	75	92	95*66	75*45	8.5
JZ-303-1-2_		75		120	108			
JZ-303-1-3_		100		130	130			
JZ-303-1-4_		125		150	159			
JZ-303-1-5_		150		165	181			

PP輪

PP round

JZ-303

商品介紹:

- 一體拉伸成型支架
- 雙波盤結構
- 全覆式防層蓋
- 材質:單軸承塑芯輪
- 用途:家俱、輕型物流台車、一般手推車、輕型機械設備
- 備註:JZ-303-1系列可選配 R固定 S活動 H煞車 G鐵煞 K疊煞 D邊煞
  JZ-303-2系列可選配 S活動 H煞車 G鐵煞 K疊煞 D邊煞
  JZ-303-3系列可選配 S活動 H煞車 G鐵煞 K疊煞 D邊煞

Product description:

- Integrated stretch forming bracket
- Double wave disc structure
- Full cover dust cover
- Material: Single bearing plastic core wheel
- Uses: Furniture, light logistics trolleys, general trolleys,light machinery and equipment.
- Note: JZ-303-1 series optional R fixed S active H brake G iron brake K stacked brake D side brake
  JZ-303-2 series optional S active H brake G iron brake K stacked brake D side brake
  JZ-303-3 series optional S active H brake G iron brake K stacked brake D side brake



JZ-303-1S



JZ-303-1R



JZ-303-1H



JZ-303-1G



JZ-303-1D



JZ-303-2S



JZ-303-2H



JZ-303-2G



JZ-303-2D



JZ-303-3S

PP輪

JZ-303

PP round

商品型號	輪子材質	輪徑 (W1)	輪寬 (W2)	荷重(KG)	安裝高度 (H)	牙桿尺寸 (H2)
JZ-303-2-1_	PP	63	32	75	92	M12*30
JZ-303-2-2_		75		120	108	
JZ-303-2-3_		100		130	130	
JZ-303-2-4_		125		150	159	
JZ-303-2-5_		150		165	181	

商品型號	輪子材質	輪徑 (W1)	輪寬 (W2)	荷重(KG)	安裝高度 (H)	孔頂尺寸 (D2)
JZ-303-3-1_	PP	63	32	75	92	Ø13
JZ-303-3-2_		75		120	108	
JZ-303-3-3_		100		130	130	
JZ-303-3-4_		125		150	159	
JZ-303-3-5_		150		165	181	

平面TPR輪

JZ-304

Flat TPR wheel



JZ-304-1S

商品介紹:

- 一體拉伸成型支架
- 雙波盤結構
- 材質:雙軸塑芯方邊TPR輪
- 用途:工業、物流台車、重型機械設備、常用於各式推車及台車
- 備註:JZ-304-1系列可選配 R固定 S活動 H煞車 G鐵煞 K疊煞 D邊煞
  JZ-304-2系列可選配 S活動 H煞車 G鐵煞 K疊煞 D邊煞
  JZ-304-3系列可選配 S活動 H煞車 G鐵煞 K疊煞 D邊煞

Product description:

- Integrated stretch forming bracket
- Double wave disc structure
- Material: Biaxial Plastic Core Square Edge TPR Wheel
- Uses: Industry, logistics trolleys, heavy machinery and equipment, often used in various trolleys and trolleys.
- Note: JZ-304-1 series optional R fixed S active H brake G iron brake K stacked brake D side brake
  JZ-304-2 series optional S active H brake G iron brake K stacked brake D side brake
  JZ-304-3 series optional S active H brake G iron brake K stacked brake D side brake



JZ-304-1R



JZ-304-1H



JZ-304-1G

平面TPR輪

JZ-304

Flat TPR wheel


JZ-304-1D


JZ-304-2S


JZ-304-2H


JZ-304-2G


JZ-304-2D


JZ-304-3S


JZ-304-3H


JZ-304-3G


JZ-304-3D

商品型號	輪子材質	輪徑 (W1)	輪寬 (W2)	荷重(KG)	安裝高度 (H)	底板尺寸 (L1)	孔距 (L2)	孔徑 (D1)
JZ-304-1-1_	TPR	63	32	75	92	95*66	75*45	8.5
JZ-304-1-2_		75		85	108			
JZ-304-1-3_		100		110	130			
JZ-304-1-4_		125		135	159			
JZ-304-1-5_		150		140	181			

商品型號	輪子材質	輪徑 (W1)	輪寬 (W2)	荷重(KG)	安裝高度 (H)	牙桿尺寸 (H2)
JZ-304-2-1_	TPR	63	32	65	92	M12*30
JZ-304-2-2_		75		75	108	
JZ-304-2-3_		100		100	130	
JZ-304-2-4_		125		125	159	
JZ-304-2-5_		150		140	181	

平面TPR輪 JZ-304

Flat TPR wheel

商品型號	輪子材質	輪徑 (W1)	輪寬 (W2)	荷重(KG)	安裝高度 (H)	孔頂尺寸 (D2)
JZ-304-3-1_	TPR	63	32	65	92	Ø13
JZ-304-3-2_		75		75	108	
JZ-304-3-3_		100		100	130	
JZ-304-3-4_		125		125	159	
JZ-304-3-5_		150		140	181	

紅色PU輪 JZ-305

Red PU wheel



JZ-305-1S

商品介紹:

- 一體拉伸成型支架
- 雙波盤結構
- 全覆式防塵蓋
- 材質:雙單軸塑芯輪
- 用途:工業、物流台車、重型機械設備、常用於各式推車及台車
- 備註:JZ-305-1系列可選配 R固定 S活動 H煞車 G鐵煞 K疊煞 D邊煞
  JZ-305-2系列可選配 S活動 H煞車 G鐵煞 K疊煞 D邊煞
  JZ-305-3系列可選配 S活動 H煞車 G鐵煞 K疊煞 D邊煞

Product description:

- Integrated stretch forming bracket
- Double wave disc structure
- Full cover dust cover
- Material: Uniaxial Plastic Core Wheel
- Uses: Industry, logistics trolleys, heavy machinery and equipment, often used in various trolleys and trolleys.
- Note: JZ-305-1 series optional R fixed S active H brake
  G iron brake K stacked brake D side brake
  JZ-305-2 series optional S active H brake
  G iron brake K stacked brake D side brake
  JZ-305-3 series optional S active H brake
  G iron brake K stacked brake D side brake



JZ-305-1R



JZ-305-1H



JZ-305-1G



JZ-305-1D



JZ-305-2S



JZ-305-2H

紅色PU輪

Red PU wheel

JZ-305

CAD



JZ-305-2G



JZ-305-2D



JZ-305-3S



JZ-305-3H



JZ-305-3G



JZ-305-3D

商品型號	輪子材質	輪徑 (W1)	輪寬 (W2)	荷重(KG)	安裝高度 (H)	底板尺寸 (L1*L2)	孔距 (P1*P2)	孔徑 (D1)
JZ-305-1-1_	PU	63	32	75	92	95*66	75*45	8.5
JZ-305-1-2_		75		100	108			
JZ-305-1-3_		100		120	130			
JZ-305-1-4_		125		140	159			
JZ-305-1-5_		150		155	181			

商品型號	輪子材質	輪徑 (W1)	輪寬 (W2)	荷重(KG)	安裝高度 (H)	牙桿尺寸 (H2)
JZ-305-2-1_	PU	63	32	75	96	M12*30
JZ-305-2-2_		75		100	112	
JZ-305-2-3_		100		120	134	
JZ-305-2-4_		125		140	163	
JZ-305-2-5_		150		155	189	

商品型號	輪子材質	輪徑 (W1)	輪寬 (W2)	荷重(KG)	安裝高度 (H)	孔頂尺寸 (D2)
JZ-305-3-1_	PU	63	32	75	90	Ø13
JZ-305-3-2_		75		100	106	
JZ-305-3-3_		100		120	128	
JZ-305-3-4_		125		140	157	
JZ-305-3-5_		150		155	183	

平面導電TPR輪

Plane conductive TPR wheel

JZ-306

CAD

商品介紹:

- 一體拉伸成型支架
- 雙波盤結構
- 材質:雙軸塑芯導電TPR輪
- 用途:工業、物流台車、重型機械設備、常用於各式推車及台車
- 備註:JZ-306-1系列可選配 R固定 S活動 H煞車 G鐵煞 K疊煞 D邊煞
  JZ-306-2系列可選配 S活動 H煞車 G鐵煞 K疊煞 D邊煞
  JZ-306-3系列可選配 S活動 H煞車 G鐵煞 K疊煞 D邊煞

Product description:

- Integrated stretch forming bracket
- Double wave disc structure
- Material: Biaxial plastic core conductive TPR wheel
- Uses: Industry, logistics trolleys, heavy machinery and equipment, often used in various trolleys and trolleys.
- Note: JZ-306-1 series optional R fixed S active H brake
  G iron brake K stacked brake D side brake
  JZ-306-2 series optional S active H brake
  G iron brake K stacked brake D side brake
  JZ-306-3 series optional S active H brake
  G iron brake K stacked brake D side brake



JZ-306-1S



JZ-306-1R



JZ-306-1H



JZ-306-1G



JZ-306-1K



JZ-306-1D



JZ-306-2S



JZ-306-2H



JZ-306-2G



JZ-306-2D

平面導電TPR輪

Plane conductive TPR wheel

JZ-306

CAD



JZ-306-3S



JZ-306-3H



JZ-306-3G



JZ-306-3D

商品型號	輪子材質	輪徑 (W1)	輪寬 (W2)	荷重(KG)	安裝高度 (H)	底板尺寸 (L1*L2)	孔距 (P1*P2)	孔徑 (D1)
JZ-306-1-1_	導電TPR	63	32	75	92	95*66	75*45	8.5
JZ-306-1-2_		75		85	108			
JZ-306-1-3_		100		110	130			
JZ-306-1-4_		125		135	159			
JZ-306-1-5_		150		140	181			

商品型號	輪子材質	輪徑 (W1)	輪寬 (W2)	荷重(KG)	安裝高度 (H)	牙桿尺寸 (H2)
JZ-306-2-1_	導電TPR	63	32	75	96	M12*30
JZ-306-2-2_		75		85	112	
JZ-306-2-3_		100		110	134	
JZ-306-2-4_		125		135	163	
JZ-306-2-5_		150		140	189	

商品型號	輪子材質	輪徑 (W1)	輪寬 (W2)	荷重(KG)	安裝高度 (H)	孔頂尺寸 (D2)
JZ-306-3-1_	導電TPR	63	32	75	90	Ø13
JZ-306-3-2_		75		85	106	
JZ-306-3-3_		100		110	128	
JZ-306-3-4_		125		135	157	
JZ-306-3-5_		150		140	183	

不鏽鋼PA輪

Stainless steel PA wheel

JZ-408



JZ-408-1S

商品介紹:

- 不鏽鋼一體拉伸成型支架
- 不鏽鋼滾針軸承
- 用途:重工業、重負荷物流台車、重型機械設備、廚房設備及食品業
- 備註:JZ-408-1系列可選配 R固定 S活動 H煞車 G鐵煞
  JZ-408-2系列可選配 S活動 H煞車 G鐵煞
  JZ-408-3系列可選配 S活動 H煞車 G鐵煞

Product description:

- Stainless steel integrated stretch forming bracket
- Stainless steel needle bearing
- Uses: Heavy industry, heavy-duty logistics trolleys, heavy machinery and equipment, kitchen equipment and food industry
- Note: JZ-408-1 series optional R fixed S active H brake G iron brake
  JZ-408-2 series optional S active H brake G iron brake
  JZ-408-3 series optional S active H brake G iron brake



JZ-408-1R



JZ-408-1H



JZ-408-1G



JZ-408-2S



JZ-408-2H



JZ-408-2G

商品型號	輪子材質	輪徑 (W1)	輪寬 (W2)	荷重 (KG)	安裝高度 (H)	底板尺寸 (L1*L2)	孔距 (P1*P2)	孔徑 (D1)
JZ-408-1-1_	PA	80	32	120	109	95*77	75*45 80*60	8.5
JZ-408-1-2_		100		150	130			
JZ-408-1-3_		125	38	170	159			
JZ-408-1-4_		150		170	180			

不鏽鋼PA輪

JZ-408

Stainless steel PA wheel

商品型號	輪子材質	輪徑 (W1)	輪寬 (W2)	荷重(KG)	安裝高度 (H)	孔頂尺寸 (D2)
JZ-408-2-1_	PA	80	32	120	108	Ø13
JZ-408-2-2_		100		150	129	
JZ-408-2-3_		125	38	170	158	
JZ-408-2-4_		150		170	179	

商品型號	輪子材質	輪徑 (W1)	輪寬 (W2)	荷重(KG)	安裝高度 (H)	牙桿尺寸 (H2)
JZ-408-3-1_	PA	80	32	120	115	M12*30
JZ-408-3-2_		100		150	136	
JZ-408-3-3_		125	38	170	165	
JZ-408-3-4_		150		170	186	

鍍黃鋅高溫HS輪

JZ-428

Yellow zinc plating high temperature HS wheel



JZ-428-S

商品介紹:

- 一體拉伸成型支架
- 雙層滾珠設計
- 高溫輪
- 材質:鋁芯雙軸軟膠
- 備註:_可選配 R固定 S活動 I煞車

Product description:

- Integrated stretch forming bracket
- Double-layer ball design
- High temperature wheel
- Material: Aluminum core biaxial soft glue
- Note: _Optional R fixed S active I brake



JZ-428-R



JZ-428-I

商品型號	輪子材質	輪徑 (W1)	輪寬 (W2)	荷重 (KG)	安裝高度 (H)	底板尺寸 (L1*L2)	孔距 (P1*P2)	孔徑 (D1)
JZ-428-1_	HS	160	50	225	196	135*110	105*77.5	10.5
JZ-428-2_		200		250	238			

鍍黃鋅鋁合金PU輪 JZ-429

Yellow zinc-plated aluminum alloy PU wheel



JZ-429-S

商品介紹:

- 一體拉伸成型支架
- 雙層滾珠設計
- 材質:鋁芯雙軸PU輪
- 用途:工業、物流台車、重型機械設備、常用於各式推車及台車
- 備註:_可選配 R固定 S活動 I煞車

Product description:

- Integrated stretch forming bracket
- Double-layer ball design
- Materail: Aluminum core double shaft PU wheel
- Uses: Industry, logistics trolleys, heavy machinery and equipment, often used in various trolleys and trolleys
- Note: _Optional R fixed S active I brake



JZ-429-R



JZ-429-I

商品型號	輪子材質	輪徑 (W1)	輪寬 (W2)	荷重 (KG)	安裝高度 (H)	底板尺寸 (L1*L2)	孔距 (P1*P2)	孔徑 (D1)
JZ-429-1_	PU	100	50	220	140	135*110	105*77.5	10.5
JZ-429-2_		125		250	165			
JZ-429-3_		150		300	191			
JZ-429-4_		200			240			

鍍黃鋅通花PU輪 JZ-431

Yellow zinc plated through flower PU wheel



JZ-431-S

商品介紹:

- 一體拉伸成型支架
- 雙層滾珠設計
- 材質:塑芯雙軸PU輪
- 用途:工業、物流台車、重型機械設備、常用於各式推車及台車
- 備註:_可選配 R固定 S活動 I煞車

Product description:

- Integrated stretch forming bracket
- Double-layer ball design
- Material: Plastic core double shaft PU wheel
- Uses: Industry, logistics trolleys, heavy machinery and equipment, often used in various trolleys and trolleys.
- Note: _Optional R fixed S active I brake

鍍黃鋅通花PA輪

JZ-430

Yellow zinc plated pass flower PA wheel



JZ-430-S

商品介紹:

- 一體拉伸成型支架
- 雙層滾珠設計
- 材質:塑芯雙軸PA輪
- 用途:重工業、重負荷物流台車、重型機械設備、廚房設備及食品業
- 備註:_可選配 R固定 S活動 I煞車

Product description:

- Integrated stretch forming bracket
- Double-layer ball design
- Material: Plastic core double shaft PA wheel
- Uses: Heavy industry, heavy-duty logistics trolleys, heavy machinery and equipment, kitchen equipment and food industry
- Note: _Optional R fixed S active I brake



JZ-430-R



JZ-430-I

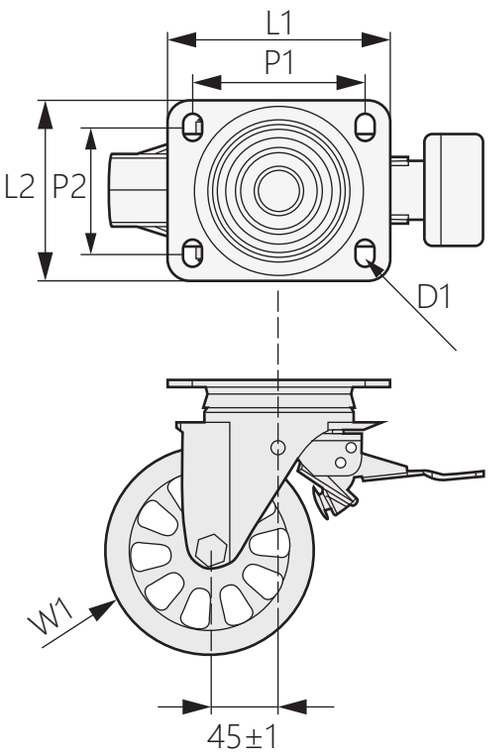

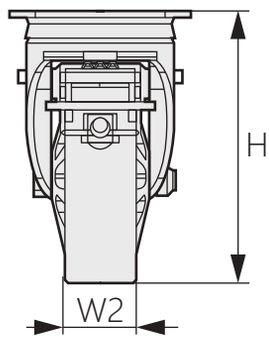

商品型號	輪子材質	輪徑 (W1)	輪寬 (W2)	荷重 (KG)	安裝高度 (H)	底板尺寸 (L1*L2)	孔距 (P1*P2)	孔徑 (D1)
JZ-430-1_	PA	100	45	320	140	135*110	105*77.5	10.5
JZ-430-2_		125		350	165			
JZ-430-3_		150		380	191			
JZ-430-4_		200		450	240			

鍍黃鋅通花PU輪 JZ-431

Yellow zinc plated through flower PU wheel



JZ-431-R



JZ-431-I

商品型號	輪子材質	輪徑 (W1)	輪寬 (W2)	荷重(KG)	安裝高度 (H)	底板尺寸 (L1*L2)	孔距 (P1*P2)	孔徑 (D1)
JZ-431-1_	PU	100	25	280	140	135*110	105*77.5	10.5
JZ-431-2_		125		300	165			
JZ-431-3_		150		350	191			
JZ-431-4_		200		400	240			

鍍黃鋅圓邊TPR輪 JZ-432

Yellow zinc plated round edge TPR wheel



JZ-432-S

商品介紹:

- 一體拉伸成型支架
- 雙層滾珠設計
- 材質:塑芯雙軸TPR輪
- 用途:工業、物流台車、重型機械設備、常用於各式推車及台車
- 備註:_可選配 R固定 S活動 I煞車

Product description:

- Integrated stretch forming bracket
- Double-layer ball design
- Material: Plastic core double shaft TPR wheel
- Uses: Industry, logistics trolleys, heavy machinery and equipment, often used in various trolleys and trolleys
- Note: _Optional R fixed S active I brake



JZ-432-R



JZ-432-I

商品型號	輪子材質	輪徑 (W1)	輪寬 (W2)	荷重(KG)	安裝高度 (H)	底板尺寸 (L1*L2)	孔距 (P1*P2)	孔徑 (D1)
JZ-432-1_	TPR	100	50	250	140	135*110	105*77.5	10.5
JZ-432-2_		125		280	165			
JZ-432-3_		150		300	191			
JZ-432-4_		200		350	240			

不鏽鋼TPR輪

JZ-433

Stainless steel TPR wheel



JZ-433-S

商品介紹:

- 不鏽鋼一體拉伸成型支架
- 不鏽鋼雙層滾珠設計
- 不鏽鋼滾針設計
- 硬度55A
- 材質:塑芯TPR輪
- 用途:醫療機構、學術單位、實驗室設備 、高科技產業、一般推車、機場推車及廚房設備
- 備註:_可選配 R固定 S活動 I煞車

Product description:

- Stainless steel integrated stretch forming bracket
- Stainless steel double-layer ball design
- Stainless steel needle design
- Hardness 55A
- Material: Plastic core TPR wheel
- Uses: Medical institutions, academic units, laboratory equipment, high-tech industries, general trolleys, airport trolleys and kitchen equipment.
- Note: _Optional R fixed S active I brake



JZ-433-R



JZ-433-I

商品型號	輪子材質	輪徑 (W1)	輪寬 (W2)	荷重(KG)	安裝高度 (H)	底板尺寸 (L1*L2)	孔距 (P1*P2)	孔徑 (D1)
JZ-433-1_	TPR	100	25	250	136	135*110	105*77.5	10.5
JZ-433-2_		125		280	162			
JZ-433-3_		150		300	189			
JZ-433-4_		200		350	238			

不鏽鋼滾針PA輪

JZ-434

Stainless steel needle roller PA wheel



JZ-434-S

商品介紹:

- 不鏽鋼一體拉伸成型支架
- 不鏽鋼雙層滾珠設計
- 不鏽鋼滾針設計
- 用途:重工業、重負荷物流台車、重型機械設備、廚房設備及食品業
- 備註:_可選配 R固定 S活動 I煞車

Product description:

- Stainless steel integrated stretch forming bracket
- Stainless steel double-layer ball design
- Stainless steel needle design
- Uses: Heavy industry, heavy-duty logistics trolleys, heavy machinery and equipment, kitchen equipment and food industry.
- Note: _Optional R fixed S active I brake

不鏽鋼滾針PA輪 JZ-434

Stainless steel needle roller PA wheel



JZ-434-R



JZ-434-I

商品型號	輪子材質	輪徑 (W1)	輪寬 (W2)	荷重(KG)	安裝高度 (H)	底板尺寸 (L1*L2)	孔距 (P1*P2)	孔徑 (D1)
JZ-434-1_	PA	100	50	350	136	135*110	105*77.5	10.5
JZ-434-2_		125		350	162			
JZ-434-3_		150		380	189			
JZ-434-4_		200		400	238			

鍍鋅通花PU輪 JZ-510

Galvanized Tonghua PU Wheel



JZ-510-S

商品介紹:

- 加大雙層滾珠設計
- 材質:雙軸承塑芯PU輪
- 用途:工業、物流台車、重型機械設備、常用於各式推車及台車
- 備註:_可選配 R固定 S活動 D邊煞 J前煞

Product description:

- Increased double-layer ball design
- Material: Double bearing plastic core PU wheel
- Uses: Industry, logistics trolleys, heavy machinery and equipment, often used in various trolleys and trolleys
- Note: _Optional R fixed S active D side brake
  J front brake



JZ-510-R



JZ-510-D



JZ-510-J

商品型號	輪子材質	輪徑 (W1)	輪寬 (W2)	荷重(KG)	安裝高度 (H)	底板尺寸 (L1*L2)	孔距 (P1*P2)	孔徑 (D1)
JZ-510-1_	PU	100	45	280	143	115*100	85*70	11
JZ-510-2_		125		300	164			
JZ-510-3_		150		350	190			
JZ-510-4_		200		400	240			

鍍鋅TPR輪

Galvanized TPR wheel

JZ-504

CAD

商品介紹:

- 一體拉伸成型支架
- 加大雙層滾珠設計
- 全覆式防層蓋
- 材質:雙軸承塑芯TPR輪
- 用途:醫療機構、學術單位、實驗室設備、高科技產業、一般推車及廚房設備
- 備註:JZ-504-1系列可選配 R固定 S活動 K煞車 D邊煞
  JZ-504-2系列可選配 S活動 K煞車 D邊煞
  JZ-504-3系列可選配 S活動 K煞車 D邊煞

Product description:

- Integrated stretch forming bracket
- Increased double-layer ball design
- Full cover dust cover
- Material: Double bearing plastic core TPR wheel
- Uses: Medical institutions, academic units, laboratory equipment, high-tech industries, general carts and kitchen equipment.
- Note: JZ-504-1 series optional R fixed S active K stacked brake D side brake
  JZ-504-2 series optional S active K stacked brake D side brake
  JZ-504-3 series optional S active K stacked brake D side brake



JZ-504-1S



JZ-504-1R



JZ-504-1K



JZ-504-1D



JZ-504-2S



JZ-504-2K



JZ-504-2D



JZ-504-3S



JZ-504-3K



JZ-504-3D

鍍鋅TPR輪

JZ-504

Galvanized TPR wheel

CAD

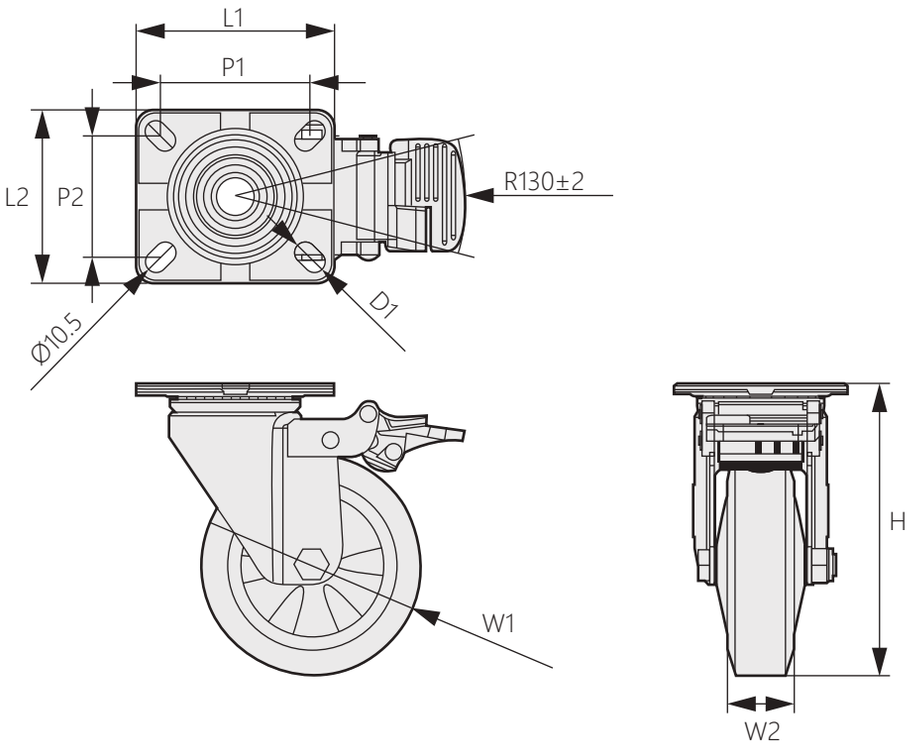

商品型號	輪子材質	輪徑 (W1)	輪寬 (W2)	荷重(KG)	安裝高度 (H)	底板尺寸 (L1*L2)	孔距 (P1*P2)	孔徑 (D1)	日式底板尺寸	日式孔距
JZ-504-1-1_	TPR	100	38	180	138	110*85	83*60	11	100*100	78*78
JZ-504-1-2_		125		200	165	112*98	85*70			
JZ-504-1-3_		150		220	193	112*98	85*70			

商品型號	輪子材質	輪徑 (W1)	輪寬 (W2)	荷重(KG)	安裝高度 (H)	底板尺寸 (L1*L2)	孔距 (P1*P2)	牙桿尺寸 (H2)	日式底板尺寸	日式孔距
JZ-504-2-1_	TPR	100	38	180	138	110*85	83*60	M20*40	100*100	78*78
JZ-504-2-2_		125		200	165	112*98	85*70			
JZ-504-2-3_		150		220	193	112*98	85*70			

商品型號	輪子材質	輪徑 (W1)	輪寬 (W2)	荷重(KG)	安裝高度 (H)	底板尺寸 (L1*L2)	孔距 (P1*P2)	孔頂尺寸 (D2)	日式底板尺寸	日式孔距
JZ-504-3-1_	TPR	100	38	180	138	110*85	83*60	Ø16	100*100	78*78
JZ-504-3-2_		125		200	165	112*98	85*70			
JZ-504-3-3_		150		220	193	112*98	85*70			

鍍鋅PA輪

Galvanized PA wheel

JZ-505

商品介紹:

- 一體拉伸成型支架
- 加大雙層滾珠設計
- 全覆式防塵蓋
- 材質:雙軸承塑芯PA輪
- 用途:重工業、重負荷物流台車、重型機械設備、廚房設備及食品業
- 備註:JZ-505-1系列可選配 R固定 S活動 K疊煞 D邊煞
  JZ-505-2系列可選配 S活動 K疊煞 D邊煞
  JZ-505-3系列可選配 S活動 K疊煞 D邊煞

Product description:

- Integrated stretch forming bracket
- Increased double-layer ball design
- Full cover dust cover
- Material: Double bearing plastic core PA wheel
- Uses: Heavy industry, heavy-duty logistics trolleys, heavy machinery and equipment, kitchen equipment and food industry.
- Note: JZ-505-1 series optional R fixed S active
  K stacked brake D side brake
  JZ-505-2 series optional S active
  K stacked brake D side brake
  JZ-505-3 series optional S active
  K stacked brake D side brake



JZ-505-1S



JZ-505-1R



JZ-505-1K



JZ-505-1D



JZ-505-2S



JZ-505-2K



JZ-505-2D



JZ-505-3S



JZ-505-3K



JZ-505-3D

鍍鋅PA輪 JZ-505

Galvanized PA wheel

CAD

商品型號	輪子材質	輪徑 (W1)	輪寬 (W2)	荷重(KG)	安裝高度 (H)	底板尺寸 (L1*L2)	孔距 (P1*P2)	孔徑 (D1)	日式底板尺寸	日式孔距
JZ-505-1-1_	PA	100	38	250	138	110*85	83*60	11	100*100	78*78
JZ-505-1-2_		125		280	165	112*98	85*70			
JZ-505-1-3_		150		300	193	112*98	85*70			

商品型號	輪子材質	輪徑 (W1)	輪寬 (W2)	荷重(KG)	安裝高度 (H)	底板尺寸 (L1*L2)	孔距 (P1*P2)	牙桿尺寸 (H2)	日式底板尺寸	日式孔距
JZ-505-2-1_	PA	100	38	250	138	110*85	83*60	M20*40	100*100	78*78
JZ-505-2-2_		125		280	165	112*98	85*70			
JZ-505-2-3_		150		300	193	112*98	85*70			

商品型號	輪子材質	輪徑 (W1)	輪寬 (W2)	荷重(KG)	安裝高度 (H)	底板尺寸 (L1*L2)	孔距 (P1*P2)	孔頂尺寸 (D2)	日式底板尺寸	日式孔距
JZ-505-3-1_	PA	100	38	250	138	110*85	83*60	Ø16	100*100	78*78
JZ-505-3-2_		125		280	165	112*98	85*70			
JZ-505-3-3_		150		300	193	112*98	85*70			

鍍鋅PU輪 JZ-506

Galvanized PU wheels

CAD



JZ-506-1S

商品介紹:

- 一體拉伸成型支架
- 加大雙層滾珠設計
- 全覆式防塵蓋
- 材質:雙軸承塑芯PU輪
- 用途:重工業、重負荷物流台車、重型機械設備、廚房設備及食品業
- 備註:JZ-506-1系列可選配 R固定 S活動 K疊煞 D邊煞
  JZ-506-2系列可選配 S活動 K疊煞 D邊煞
  JZ-506-3系列可選配 S活動 K疊煞 D邊煞

Product description:

- Integrated stretch forming bracket
- Increased double-layer ball design
- Full cover dust cover
- Material: Double bearing plastic core PU wheel
- Uses: Heavy industry, heavy-duty logistics trolleys, heavy machinery and equipment, kitchen equipment and food industry.
- Note: JZ-506-1 series optional R fixed S active K stacked brake D side brake
  JZ-506-2 series optional S active K stacked brake D side brake
  JZ-506-3 series optional S active K stacked brake D side brake

鍍鋅PU輪

Galvanized PU wheels

JZ-506

CAD



JZ-506-1R



JZ-506-1K



JZ-506-1D



JZ-506-2S



JZ-506-2K



JZ-506-2D



JZ-506-3S



JZ-506-3K



JZ-506-3D

商品型號	輪子材質	輪徑 (W1)	輪寬 (W2)	荷重(KG)	安裝高度 (H)	底板尺寸 (L1*L2)	孔距 (P1*P2)	孔徑 (D1)	日式底板尺寸	日式孔距
JZ-506-1-1_	PU	100	38	200	138	110*85	83*60	11	100*100	78*78
JZ-506-1-2_		125		250	165	112*98	85*70			
JZ-506-1-3_		150		280	193	112*98	85*70			

商品型號	輪子材質	輪徑 (W1)	輪寬 (W2)	荷重(KG)	安裝高度 (H)	底板尺寸 (L1*L2)	孔距 (P1*P2)	牙桿尺寸 (H2)	日式底板尺寸	日式孔距
JZ-506-2-1_	PU	100	38	200	138	110*85	83*60	M20*40	100*100	78*78
JZ-506-2-2_		125		250	165	112*98	85*70			
JZ-506-2-3_		150		280	193	112*98	85*70			

商品型號	輪子材質	輪徑 (W1)	輪寬 (W2)	荷重(KG)	安裝高度 (H)	底板尺寸 (L1*L2)	孔距 (P1*P2)	孔頂尺寸 (D2)	日式底板尺寸	日式孔距
JZ-506-3-1_	PU	100	38	200	138	110*85	83*60	Ø16	100*100	78*78
JZ-506-3-2_		125		250	165	112*98	85*70			
JZ-506-3-3_		150		280	193	112*98	85*70			

鍍鋅咖啡色TPR輪 JZ-507

Galvanized Coffee TPR Wheel



JZ-507-S

商品介紹:

- 加大雙層滾珠設計
- 材質:雙軸承塑芯TPR輪
- 用途:醫療機構、學術單位、實驗室設備、高科技產業、一般推車、機場推車及廚房設備
- 備註:_可選配 R固定 S活動 D邊煞 J前煞

Product description:

- Increased double-layer ball design
- Material: Double bearing plastic core TPR wheel
- Uses: Medical institutions, academic units, laboratory equipment, high-tech industries, general trolleys, airport trolleys and kitchen equipment.
- Note: _Optional R fixed S active D side brake J front brake



JZ-507-R



JZ-507-D



JZ-507-J

商品型號	輪子材質	輪徑 (W1)	輪寬 (W2)	荷重(KG)	安裝高度 (H)	底板尺寸 (L1*L2)	孔距 (P1*P2)	孔徑 (D1)
JZ-507-1_	TPR	100	50	280	143	115*100	85*70	11
JZ-507-2_		125		300	164			
JZ-507-3_		150		350	190			
JZ-507-4_		200		400	240			

鍍鋅圓邊TPR輪 JZ-508

Galvanized round edge TPR wheel



JZ-508-S

商品介紹:

- 加大雙層滾珠設計
- 材質:雙軸承塑芯TPR輪
- 用途:醫療機構、學術單位、實驗室設備、高科技產業、一般推車、機場推車及廚房設備
- 備註:_可選配 R固定 S活動 D邊煞 J前煞

Product description:

- Increased double-layer ball design
- Material: Double bearing plastic core TPR wheel
- Uses: Medical institutions, academic units, laboratory equipment, high-tech industries, general trolleys, airport trolleys and kitchen equipment.
- Note: _Optional R fixed S active D side brake J front brake



JZ-508-R



JZ-508-D



JZ-508-J

鍍鋅圓邊TPR輪 JZ-508

Galvanized round edge TPR wheel

商品型號	輪子材質	輪徑 (W1)	輪寬 (W2)	荷重(KG)	安裝高度 (H)	底板尺寸 (L1*L2)	孔距 (P1*P2)	孔徑 (D1)
JZ-508-1_	TPR	100	50	280	143	115*100	85*70	11
JZ-508-2_		125		300	164			
JZ-508-3_		150		350	190			
JZ-508-4_		200		400	240			

鍍鋅通花PA輪 JZ-509

Galvanized Tonghua PA Wheel



JZ-509-S

商品介紹:

- 加大雙層滾珠設計
- 材質:雙軸承塑芯PA輪
- 用途:重工業、重負荷物流台車、重型機械設備、廚房設備及食品業
- 備註:_可選配 R固定 S活動 D邊煞 J前煞

Product description:

- Increased double-layer ball design
- Material: Double bearing plastic core PA wheel
- Uses: Heavy industry, heavy-duty logistics trolleys, heavy machinery and equipment, kitchen equipment and food industry.
- Note: _Optional R fixed S active D side brake
  J front brake



JZ-509-R



JZ-509-D



JZ-509-J

商品型號	輪子材質	輪徑 (W1)	輪寬 (W2)	荷重(KG)	安裝高度 (H)	底板尺寸 (L1*L2)	孔距 (P1*P2)	孔徑 (D1)
JZ-509-1_	PA	100	45	320	143	115*100	85*70	11
JZ-509-2_		125		350	164			
JZ-509-3_		150		380	190			
JZ-509-4_		200		450	240			

低重心腳輪 JZ-605

Low center of gravity caster



JZ-605-S

商品介紹:

- ■一體拉伸成型支架
- ■雙層滾珠設計
- ■一體成型雙軸單輪
- ■底板A3 2.5”美式孔、E4 3”歐式孔可選，附圖如下
- ■用途:家俱、輕型物流台車、一般手推車、輕型機械設備
- ■備註:_可選配 R固定 S活動

Product description:

- ■Integrated stretch forming bracket
- ■Double-layer ball design
- ■One-piece double-shaft single wheel
- ■The bottom plate A3 2.5 "American-style holes, E4 3" European-style holes, the drawings are as follows.
- ■Uses: Heavy industry, heavy-duty logistics trolleys, heavy machinery and equipment, kitchen equipment and food industry.
- ■Note: _Optional R fixed S activity

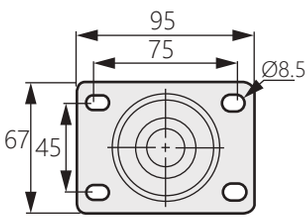

A3底板尺寸 2.5"

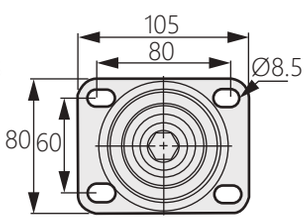

E4底板尺寸 3"

商品型號		輪徑 (W1)	輪寬 (W2)	荷重(KG)	安裝高度 (H)	底板尺寸 (L1*L2)	孔距 (P1*P2)	孔徑 (D1)
PA	PP							
JZ-605-1-1_	JZ-605-2-1_	50	38	150	74	95*67	75*45	8.5
JZ-605-1-2_	JZ-605-2-2_	63		150	94	95*67	75*45	
JZ-605-1-3_	JZ-605-2-3_	75	45	200	102	105*80	80*60	

藍鋅PU輪 JZ-615-1

Blue zinc PU wheel



JZ-615-1S

商品介紹:

- ■一體拉伸成型支架
- ■加大雙波盤
- ■雙層滾珠設計
- ■一體成型雙軸單輪
- ■用途:工業、物流台車、重型機械設備、常用於各式推車及台車
- ■備註:_可選配 R固定 S活動 D邊煞

Product description:

- ■Integrated stretch forming bracket
- ■Increase double wave plate
- ■Double-layer ball design
- ■One-piece double-shaft single wheel
- ■Uses: Industry, logistics trolleys, heavy machinery and equipment, often used in various trolleys and trolleys.
- ■Note: _Optional R fixed S activity D side brake

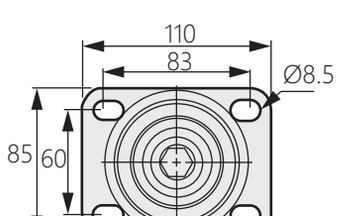

底板尺寸

商品型號	輪子材質	輪徑 (W1)	輪寬 (W2)	荷重(KG)	安裝高度 (H)	底板尺寸 (L1*L2)	孔距 (P1*P2)	孔徑 (D1)
JZ-615-1-1_	PU	75	45	400	107	110*85	83*60	9

日式支架腳輪

JZ-612

Japanese bracket caster



商品介紹:

- ■一體拉伸成型支架
- ■雙層滾珠設計
- ■一體成型雙軸單輪
- ■用途:家俱、輕型物流台車、一般手推車、輕型機械設備

Product description:

- ■Integrated stretch forming bracket
- ■Double-layer ball design
- ■One-piece double-shaft single wheel
- ■Uses: Furniture, light logistics trolleys, general trolleys, light machinery and equipment.

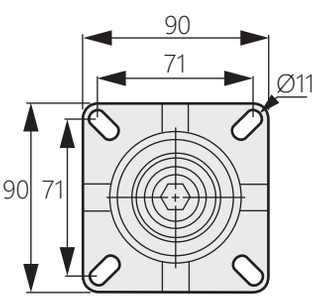

J5底板尺寸

商品型號	輪子材質	輪徑 (W1)	輪寬 (W2)	荷重(KG)	安裝高度 (H)	底板尺寸 (L1*L2)	孔距 (P1*P2)	孔徑 (D1)
JZ-612-1-1	PA	63	38	300	92	90*90	71*71	9
JZ-612-1-2		75		400	105			
JZ-612-2-1	MC	63		400	92			
JZ-612-2-2		75		500	105			
JZ-612-3-1	PU	63		300	92			
JZ-612-3-2		75			105			

日歐式支架鋁芯PU輪

JZ-618-1

European-style bracket aluminum core PU wheel



JZ-618-1S

商品介紹:

- ■一體拉伸成型支架
- ■雙層滾珠設計
- ■一體成型雙軸單輪
- ■底板歐式、日式底板可選，附圖如下
- ■用途:工業、物流台車、重型機械設備、常用於各式推車及台車
- ■備註:_可選配 R固定 S活動

Product description:

- ■Integrated stretch forming bracket
- ■Double-layer ball design
- ■One-piece double-shaft single wheel
- ■European and Japanese bottom plates are optional.
- ■Uses: Industry, logistics trolleys, heavy machinery and equipment, often used in various trolleys and trolleys.
- ■Note: _Optional R fixed S active

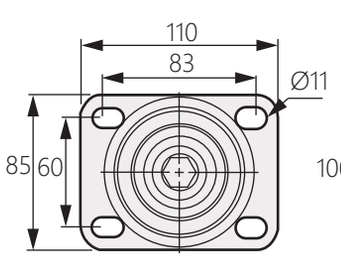

歐式底板尺寸

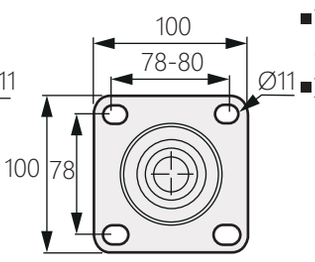

日式底板尺寸

商品型號	輪子材質	輪徑 (W1)	輪寬 (W2)	荷重(KG)	安裝高度 (H)	底板尺寸 (L1*L2)	孔距 (P1*P2)	孔徑 (D1)	日式底板尺寸	日式孔距
JZ-618-1-1_	PU	63	45	460	96	110*85	83*60	9	100*100	78*78
JZ-618-1-2_		75		600	107					

日式支架MC輪

JZ-168

Japanese style MC wheel



商品介紹:

- ■一體拉伸成型支架
- ■加大雙波盤
- ■雙層滾珠設計
- ■一體成型雙軸單輪
- ■MC輪:採用離心澆鑄技術，一體成型，韌性與強度兼具的高密度材質

Product description:

- ■Integrated stretch forming bracket
- ■Increase double wave plate,Double-layer ball design
- ■One-piece double-shaft single wheel
- ■MC wheel: High density material with both toughness and strength by using centrifugal casting technology

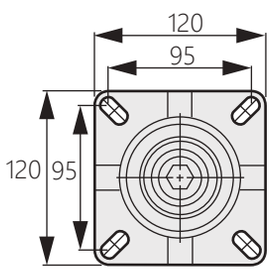

底板尺寸

商品型號	輪子材質	輪徑 (W1)	輪寬 (W2)	荷重 (KG)	安裝高度 (H)	日式底板尺寸 (L1*L2)	日式孔距 (P1*P2)	孔徑 (D1)
JZ-168-1	MC	63	38	300	90	82*82	63*63	9
JZ-168-2		75		400	100			

日歐式支架MC尼龍輪

JZ-618-2

Japanese and European bracket MC nylon wheel



JZ-618-2S

商品介紹:

- ■一體拉伸成型支架
- ■加大雙波盤
- ■雙層滾珠設計
- ■一體成型雙軸單輪
- ■底板歐式、日式底板可選，附圖如下
- ■MC輪:採用離心澆鑄技術，一體成型，韌性與強度兼具的高密度材質
- ■備註:_可搭配 R固定 S活動

Product description:

- ■Integrated stretch forming bracket
- ■Increase double wave plate
- ■Double-layer ball design
- ■One-piece double-shaft single wheel
- ■European and Japanese bottom plates are optional.
- ■MC wheel: High density material with both toughness and strength by using centrifugal casting technology
- ■Note: _Optional R fixed S activities

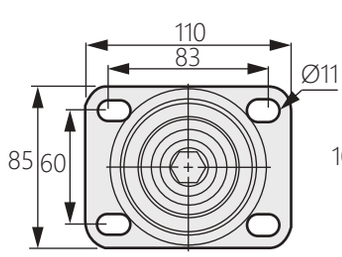

歐式底板尺寸

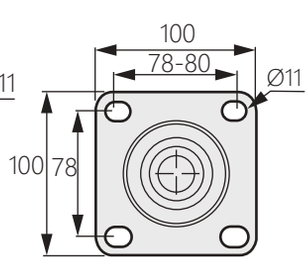

日式底板尺寸

商品型號	輪子材質	輪徑 (W1)	輪寬 (W2)	荷重 (KG)	安裝高度 (H)	底板尺寸 (L1*L2)	孔距 (P1*P2)	日式底板尺寸	日式孔距	孔徑 (D1)
JZ-618-2-1_	MC	63	45	600	96	110*85(E4)	83*60	100*100(J6)	78*78	9
JZ-618-2-2_		75		700	107					

不鏽鋼PA輪

JZ-615-2

Stainless steel PA wheel



JZ-615-2S

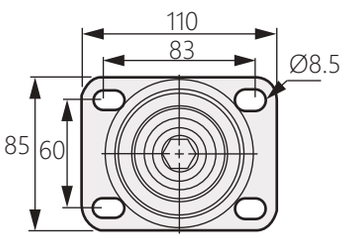

底板尺寸

商品介紹:

- ■一體拉伸成型支架
- ■加大雙波盤
- ■雙層滾珠設計
- ■一體成型雙軸單輪
- ■用途:重工業、重負荷物流台車、重型機械設備、廚房設備及食品業
- ■備註:_可選配 R固定 S活動

Product description:

- ■Integrated stretch forming bracket
- ■Increase double wave plate
- ■Double-layer ball design
- ■One-piece double-shaft single wheel
- ■Uses: Heavy industry, heavy-duty logistics trolley, heavy machinery and equipment, kitchen equipment and food industry.
- ■Note: _Optional R fixed S active

商品型號	輪子材質	輪徑 (W1)	輪寬 (W2)	荷重(KG)	安裝高度 (H)	底板尺寸 (L1*L2)	孔距 (P1*P2)	孔徑 (D1)
JZ-615-2-1_	PA	50	45	300	80	110*85	83*60	9
JZ-615-2-2_		63		350	94			
JZ-615-2-3_		75		400	107			

藍鋅PA輪

JZ-615-3

Blue zinc PA wheel



JZ-615-3S

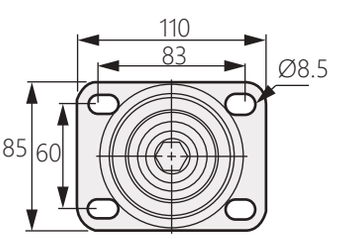

底板尺寸

商品介紹:

- ■一體拉伸成型支架
- ■加大雙波盤
- ■雙層滾珠設計
- ■一體成型雙軸單輪
- ■用途:重工業、重負荷物流台車、重型機械設備、廚房設備及食品業
- ■備註:_可選配 R固定 S活動 D邊煞

Product description:

- ■Integrated stretch forming bracket
- ■Increase double wave plate
- ■Double-layer ball design
- ■One-piece double-shaft single wheel
- ■Uses: Heavy industry, heavy-duty logistics trolley, heavy machinery and equipment, kitchen equipment and food industry.
- ■Note: _Optional R fixed S activity D side brake

商品型號	輪子材質	輪徑 (W1)	輪寬 (W2)	荷重(KG)	安裝高度 (H)	底板尺寸 (L1*L2)	孔距 (P1*P2)	孔徑 (D1)
JZ-615-3-1_	PA	50	45	250	80	110*85	83*60	9
JZ-615-3-2_		63		300	94			
JZ-615-3-3_		75		350	107			

歐式支架MC輪

JZ-616

European bracket PA wheel



JZ-616-R



JZ-616-S



JZ-616-D

商品介紹:

- ■一體拉伸成型支架
- ■加大雙波盤、雙層滾珠設計
- ■一體成型雙軸單輪
- ■MC輪:採用離心澆鑄技術，一體成型
- ■適用產業:重工業、重負荷物流台車、重型機械設備、廚房設備及食品業
- ■備註:JZ-616-1系列可選配 R固定 S活動 D邊煞
  JZ-616-2系列可選配 S活動 D邊煞
  JZ-616-3系列可選配 S活動 D邊煞

Product description:

- ■Integrated stretch forming bracket
- ■Increase double wave plate,Double-layer ball design
- ■One-piece double-shaft single wheel
- ■MC wheel: Adopt centrifugal casting technology, integrated molding
- ■Uses: Heavy industry, heavy-duty logistics trolleys, heavy machinery and equipment, kitchen equipment and food industry.
- ■Note: JZ-616-1 series optional R fixed S active D side brake
  JZ-616-2 series optional S side D side brake
  JZ-616-3 series optional S active D side brake

商品型號	輪子材質	輪徑 (W1)	輪寬 (W2)	荷重(KG)	安裝高度 (H)	底板尺寸 (L1)	孔距 (L2)	孔徑 (D1)
JZ-616-1-1_	MC	50	45	400	80	110*85	83*60	9
JZ-616-1-2_		63		500	94			
JZ-616-1-3_		75		600	107			

商品型號	輪子材質	輪徑 (W1)	輪寬 (W2)	荷重(KG)	安裝高度 (H)	牙桿尺寸 (H2)
JZ-616-2-1_	MC	50	45	400	80	M20*40
JZ-616-2-2_		63		500	94	
JZ-616-2-3_		75		600	107	

商品型號	輪子材質	輪徑 (W1)	輪寬 (W2)	荷重(KG)	安裝高度 (H)	孔頂尺寸 (D2)
JZ-616-3-1_	MC	50	45	400	80	Ø16
JZ-616-3-2_		63		500	94	
JZ-616-3-3_		75		600	107	

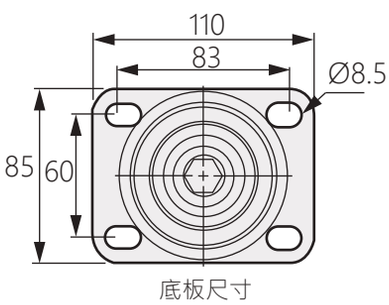

底板尺寸

歐式支架PA輪

JZ-617

European bracket PA wheel



JZ-617-R



JZ-617-S



JZ-617-D

商品介紹:

- ■一體拉伸成型支架
- ■加大雙波盤、雙層滾珠設計
- ■一體成型雙軸單輪
- ■PA輪:特殊配方工程尼龍輪
- ■適用產業:重工業、重負荷物流台車、重型機械設備、廚房設備及食品業
- ■備註:JZ-617-1系列可選配 R固定 S活動 D邊煞
  JZ-617-2系列可選配 S活動 D邊煞
  JZ-617-3系列可選配 S活動 D邊煞

Product description:

- ■Integrated stretch forming bracket
- ■Increase double wave plate,Double-layer ball design
- ■One-piece double-shaft single wheel
- ■PA wheel: Special formula engineering nylon wheel
- ■Uses: Heavy industry, heavy-duty logistics trolleys, heavy machinery and equipment, kitchen equipment and food industry.
- ■Note: JZ-617-1 series optional R fixed S active D side brake
  JZ-617-2 series optional S side D side brake
  JZ-617-3 series optional S active D side brake

商品型號	輪子材質	輪徑 (W1)	輪寬 (W2)	荷重(KG)	安裝高度 (H)	底板尺寸 (L1)	孔距 (L2)	孔徑 (D1)
JZ-617-1-1_	PA	50	45	300	80	110*85	83*60	9
JZ-617-1-2_		63		400	94			
JZ-617-1-3_		75		500	107			

商品型號	輪子材質	輪徑 (W1)	輪寬 (W2)	荷重(KG)	安裝高度 (H)	牙桿尺寸 (H2)
JZ-617-2-1_	PA	50	45	300	80	M20*40
JZ-617-2-2_		63		400	94	
JZ-617-2-3_		75		500	107	

商品型號	輪子材質	輪徑 (W1)	輪寬 (W2)	荷重(KG)	安裝高度 (H)	孔頂尺寸 (D2)
JZ-617-3-1_	PA	50	45	300	80	Ø16
JZ-617-3-2_		63		400	94	
JZ-617-3-3_		75		500	107	

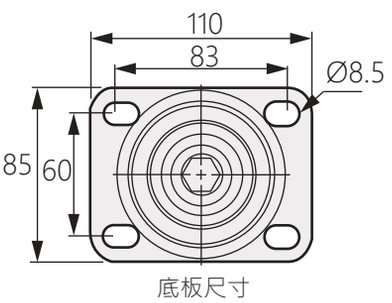

底板尺寸

低重心PA調節輪 JZ-620

Low center of gravity PA adjustment wheel



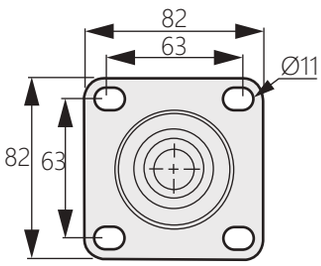

日式底板尺寸

商品介紹:
- ■鍍鋅調節支架
- ■材質:輪子PA(尼龍)含調整腳
- ■用途:重工業、重負荷物流台車、重型機械設備、廚房設備及食品業

Product description:
- ■Galvanized adjustment bracket
- ■Material: Wheel PA (nylon) with adjusting feet
- ■Uses: Heavy industry, heavy-duty logistics trolleys, heavy machinery and equipment, kitchen equipment and food industry.

商品型號	輪子材質	輪徑 (W1)	輪寬 (W2)	荷重(KG)	安裝高度 (H)	底板尺寸 (L1)	孔距 (L2)	孔徑 (D1)
JZ-620-1	PA	63	45	350	94	120*120	95*95	11
JZ-620-2		75		400	107			

PA輪 JZ-602

PA round


JZ-602-1R

商品介紹:
- ■一體拉伸成型支架
- ■雙層滾珠設計
- ■一體成型雙軸單輪
- ■用途:重工業、重負荷物流台車、重型機械設備、廚房設備及食品業
- ■備註:JZ-602-1系列可選配 R固定 S活動

Product description:
- ■Integrated stretch forming bracket
- ■Double-layer ball design
- ■One-piece double-shaft single wheel
- ■Uses: Heavy industry, heavy-duty logistics trolleys, heavy machinery and equipment, kitchen equipment and food industry.
- ■Note: JZ-602-1 series optional R fixed S activity

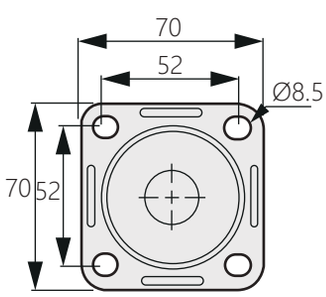

底板尺寸


JZ-602-1S


JZ-602-2S

商品型號	輪子材質	輪徑 (W1)	輪寬 (W2)	荷重(KG)	安裝高度 (H)	底板尺寸 (L1*L2)	孔距 (P1*P2)	孔徑 (D1)
JZ-602-1-1_	PA雙輪	38	45	100	68	70*70	52*52	8.5
JZ-602-1-2_		50		120	79			
JZ-602-2S	PA單輪	50	50	200	79			

低重心水平調節PA輪

JZ-625

Low center of gravity flat bottom level adjustment PA wheel



JZ-625-1

商品介紹:

- ■水平調節
- ■壓鑄鋁支架
- ■材質: 輪子PA(尼龍)
- ■用途:重工業、重負荷物流台車、重型機械設備、廚房設備及食品業

Product description:

- ■Level adjustment
- ■Die-cast aluminum bracket
- ■Material: Wheel PA (nylon)
- ■Uses: Heavy industry, heavy-duty logistics trolleys, heavy machinery and equipment, kitchen equipment and food industry.



JZ-625-2



JZ-625-3

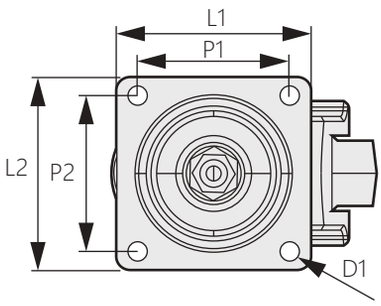

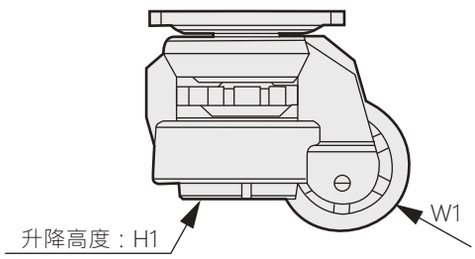

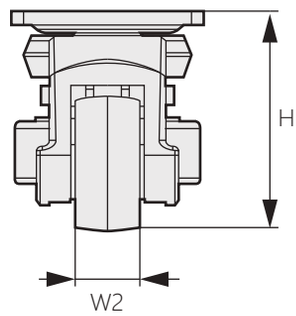

商品型號	輪子材質	輪徑 (W1)	輪寬 (W2)	荷重(KG)	升降高度 (H1)	安裝高度 (H)	底板尺寸 (L1*L2)	孔距 (P1*P2)	孔徑 (D1)
JZ-625-1-1	PA	40	19.2	50	8	75	63*63	42*42	7
JZ-625-1-2		50	24	250	10	85	73*73	58*58	7
JZ-625-1-3		62	30.7	500	12	110	92*92	70*70	9
JZ-625-1-4		75	32	750	12	120	95*95	70*70	11
JZ-625-1-5		75	32	1000	12	120	95*95	70*70	11

低重心水平調節PA輪

JZ-625

Low center of gravity flat bottom level adjustment PA wheel

CAD

商品型號	輪子材質	輪徑 (W1)	輪寬 (W2)	荷重(KG)	升降高度 (H1)	安裝高度 (H)	孔頂尺寸 (D2)
JZ-625-2-1	PA	40	19.2	50	8	75	Ø8
JZ-625-2-2		50	24	250	10	85	Ø12
JZ-625-2-3		62	30.7	500	12	110	Ø14
JZ-625-2-4		75	32	750	12	120	Ø14
JZ-625-2-5		75	32	1000	12	120	Ø16

商品型號	輪子材質	輪徑 (W1)	輪寬 (W2)	荷重(KG)	升降高度 (H1)	安裝高度 (H)	牙桿尺寸 (H2)
JZ-625-3-1	PA	40	19.2	50	8	75	M8
JZ-625-3-2		50	24	250	10	85	M12
JZ-625-3-3		62	30.7	500	12	110	M14
JZ-625-3-4		75	32	750	12	120	M14
JZ-625-3-5		75	32	1000	12	120	M16

使用材料說明

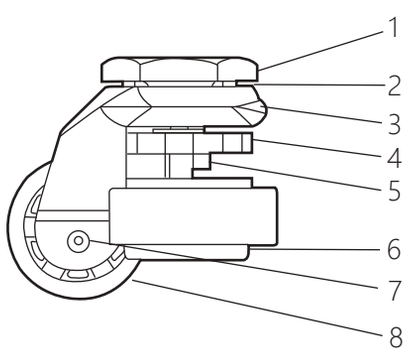

編號	名稱	材質	備註
1	頂板	乾版	鍍鋅
2	鋼球	軸承剛	鍍鎳/鍍鉻
3	外殼	壓鑄鋁	噴塗
4	手調齒輪	尼龍-6	紅色
5	調節螺桿	SM45C	鍍鋅
6	支腳	橡膠	黑色
7	軸	SM45C	鍍鋅
8	輪子	尼龍-6	黑色

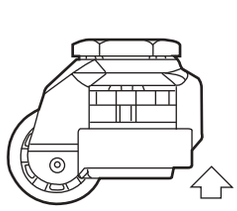

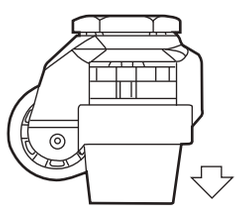

使用說明

1.水平調節腳輪使用時，可根據裝備和重載貨物移動或固定來選擇，在裝備載重超過4個腳輪推動載重時有可能物體載重中在2個腳輪上，因此即使裝4個以上的腳輪也無法承受更高的載重

2.產品的特性移動時速不可超過1KM/h，並且遇到高低不平的工作環境時應抬著移動或輕輕移動，以免腳輪受到衝擊。

3.移動時手把往左旋轉調整致使橡膠底座充分離開地面

平面軸承通花PA輪

JZ-728

Plane bearing through flower PA wheel

商品介紹:
- ■一體拉伸成型支架
- ■全包塑芯輪-具備防塵效果，不會藏污納垢
- ■專利波盤設計
- ■平面軸承搭配滾珠
- ■材質:尼龍
- ■表面處理:環保黃鋅
- ■備註:_可選配 R固定 S活動 I單踏後雙煞

Product description:
- ■One-piece stretch forming bracket
- ■Full-coated plastic core wheel-with dustproof effect, will not hide dirt
- ■Patent wave plate design
- ■Flat bearing with balls
- ■Material: Nylon
- ■Note: _Optional R fixed S activity I single pedal double brake



JZ-728-R



JZ-728-S



JZ-728-I

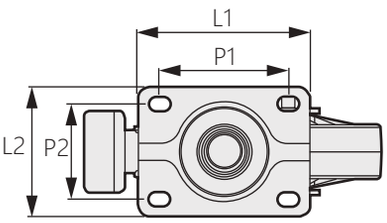

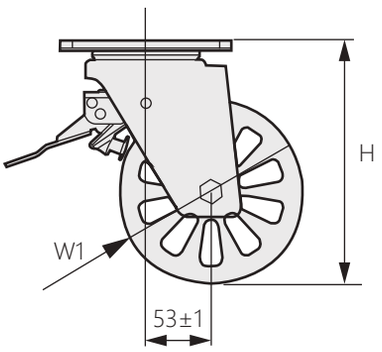

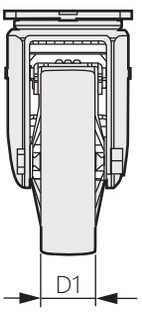

商品型號	輪子材質	輪徑 (WI)	輪寬 (W2)	荷重 (KG)	安裝高度 (H)	底板尺寸 (L1*L2)	孔距 (P1*P2)	孔徑(D1)
JZ-728-1_	PA	125	45	500	170	140*105	105*77.5	11
JZ-728-2_		150		600	197			
JZ-728-3_		200		800	246			

訂購須知

樺皓企業有限公司

購買方法

*商品即使買一個也可以訂購

聯絡方式

地址:23444新北市永和區保生路1號12樓之8

電話:(02)8923-2209

傳真:(02)2927-4556

訂購方法

可透過郵件受理需訂購的商品和數量
我們會盡速進行接洽
郵件地址: info@tekworld.com.tw

請告知商品編號、數量、客戶資料
也可洽詢與技術的諮詢
連絡電話:(02)89232209

填寫我司訂購單專用格式紙以外,
客戶的格式亦可受理
傳真號碼:(02)2927-4556

基本服務

運　　費	*購買合計金額為新台幣3000元(未稅並包含貨到付款手續費)以上時免運費,若未達該金額，請告知關於運費的發票填寫方法
付款方法	*首次交易為事先付款，當訂購的商品抵達台灣時，將以電話通知相關匯款事項
交貨方法	*原則上採用寄送，亦可利用貨到付款
交　　期	*若有庫存的訂購商品可在2個工作日以內送達如遇缺貨將事先通知 *台灣倉庫中心會準備持續性(定期)商品庫存
消 費 稅	*報價單、訂購單等的金額全部都是未稅，敬請注意

TAKIGEN

TOCHIGIYA

southco
CONNECT · CREATE · INNOVATE

Accuride
Always Moving Forward

SUGATSUNE

Value Creator
IMAO

AUTO CFT
AUTOCFT CO., LTD.

MEIDEN

明日をささえる
PiCa

PEM

우일산업(주)

HAMMER CASTER®

G-DOK IND.

台灣總公司
樺皓企業有限公司
新北市永和區保生路1號12樓之8
TEL 02-89232209
FAX 02-29274556

展翊五金有限公司
東莞市大嶺山鎮莞長路487號匯海工業園
第三棟一樓107室
0769-81625698
15916784750,15989626052

昆山特利世貿易有限公司
中國江蘇省昆山市開發區百富路88號C-203室
0769-81625698
15916784750,15989626052

SINGAPORE PTE LTD.,
36 Robinson Road,#14-05 City House,Singapore 068877
+65-6227-9788

TEKWORLD
樺皓企業有限公司

電話：02-8923-2209　傳真：02-2927-4556　網址：http://www.tekworld.com.tw